NEW AGE

THIRD REVISED EDITION

# BUILDING MATERIALS

S. K. Duggal

NEW AGE INTERNATIONAL PUBLISHERS

# BUILDING
# MATERIALS

This page intentionally left blank

# BUILDING MATERIALS

(THIRD REVISED EDITION)

**S. K. Duggal**
B.E., M.E., Ph.D.
Professor and Head
Civil Engineering Department
Motilal Nehru Institute of Technology
Allahabad (U.P.)

PUBLISHING FOR ONE WORLD

NEW AGE INTERNATIONAL (P) LIMITED, PUBLISHERS
New Delhi • Bangalore • Chennai • Cochin • Guwahati • Hyderabad
Jalandhar • Kolkata • Lucknow • Mumbai • Ranchi
Visit us at www.newagepublishers.com

Published by New Age International (P) Ltd., Publishers

**ISBN (13) : 978-81-224-2975-6**

PUBLISHING FOR ONE WORLD
**NEW AGE INTERNATIONAL (P) LIMITED, PUBLISHERS**
4835/24, Ansari Road, Daryaganj, New Delhi - 110002
Visit us at **www.newagepublishers.com**

# Preface to the Third Edition

The book is considerably modified version of the 2000 edition. In third edition of the book extensive revisions have been made. New materials have been introduced due to the advances in the technology and progress in industry. The information presented includes characteristics of the materials in regards to their physical and mechanical properties with emphasis on their strength and durability qualities. The material presented can be supplemented by the information from I.S. Codes and various product manufacturers.

This edition embodies material changes in the chapters dealing with Cement, Concrete, Lime and many others. Testing procedures of the materials have been updated for most of the materials as some of the codes have been revised. Especially, in chapter 3 on Rocks and Stones the section on testing of Stones has been completely rewritten.

Chapter 8 on Lime has been completely rewritten to make it more reader friendly. Logical changes in chapter 5 on Cement, chapter 10 on Concrete and chapter 20 on Special Cements and Cement Concretes have been made. Admixtures for concrete have been placed in chapter 10 and section on Pointing has been removed from chapter 12 on Building Mortars. Many newer and upcoming more important concretes such as Self compacting Concrete, Bacterial Concrete have been introduced in chapter 20 on special Cements and Cement Concrete. Numerous revision of data and substitutions in description have been made not only in these chapters but in other chapters also. Smart materials and composite materials have been introduced in chapter 21 on Miscellaneous Materials.

The author will be grateful to the readers for their comments and suggestions for further improvement of the book.

**S.K. Duggal**

# Preface to the Second Edition

The second edition of this book deals with properties of building materials and techniques for their manufacturing. Applications of building materials have been presented with emphasis on engineering and economic approaches for determining the optimum kind of materials, best suited to specific conditions of service in buildings. This edition provides a thorough and practical groundwork for students of civil, architecture and construction technology. The expanded and updated text can also serve as a refresher and reference for practicing civil engineers, architects, contractors, and other workers who must be aware of new building materials and techniques.

The building materials industry is in continual development, the range of products is being expanded, and novel techniques for optimizing production processes are being introduced. The main purpose of the book is to present a basic course of study with a detailed coverage of basic theory and practice of the manufacture of building materials. The present edition embodies material change in the chapters dealing with lime, cement, concrete, and many other minor revisions.

Since concrete (Chapter 10) is the most widely and extensively used building material, its production, properties, and testing have been thoroughly revised and discussed in more details and depth. Chapter 11 on mix design has been introduced to make the used understand better the manufacture and properties of concrete. Standards laid by Bureau of Indian Standards have been followed.

Extensive addition in Chapter 20, miscellaneous materials, include elaboration of geotextiles, new types of cements and concretes—their properties and production processes.

All this was possible due to the suggestions, and comments received form many individuals and students. I would like to thank all of them. Acknowledgement is also made to New Age Publishers for publishing the second edition.

**S.K. Duggal**

# Preface to the First Edition

The primary purpose of writing this book is to give engineering students up-to-date information on building materials. The book has been prepared after referring to a number of text books, references and standards. S.I. units have been used throughout the text as far as possible.

The author has tried to incorporate essential information concerning manufacture/fabrication of the various building materials; the data covering the more important mechanical and physical properties, influences of various factors on these properties; the causes of defects, their prevention and remedies; testing of materials. An attempt has also been made to present to the reader some of the more general uses and applications of the different materials.

The author gratefully acknowledges the considerable encouragement, splendid help and valuable suggestions received form his colleagues. Appreciation and thanks are also due to those students who went through the preliminary and final scripts.

Finally thanks are due to my wife Suman and children Swati and Shashank for their tolerance during this trying time. Efforts have been made to keep errors to a minimum. However, they are inevitable. Suggestions are welcomed from all concerned pointing out any oversights.

**S.K. Duggal**

This page intentionally left blank

# CONTENTS

# 1

# PRINCIPAL PROPERTIES OF BUILDING MATERIALS

## 1.1 INTRODUCTION

Building materials have an important role to play in this modern age of technology. Although their most important use is in construction activities, no field of engineering is conceivable without their use. Also, the building materials industry is an important contributor in our national economy as its output governs both the rate and the quality of construction work.

There are certain general factors which affect the choice of materials for a particular scheme. Perhaps the most important of these is the *climatic background*. Obviously, different materials and forms of construction have developed in different parts of the world as a result of climatic differences. Another factor is the *economic aspect* of the choice of materials. The rapid advance of constructional methods, the increasing introduction of mechanical tools and plants, and changes in the organisation of the building industry may appreciably influence the choice of materials.

Due to the great diversity in the usage of buildings and installations and the various processes of production, a great variety of requirements are placed upon building materials calling for a very wide range of their properties: strength at low and high temperatures, resistance to ordinary water and sea water, acids and alkalis etc. Also, materials for interior decoration of residential and public buildings, gardens and parks, etc. should be, by their very purpose, pleasant to the eye, durable and strong. Specific properties of building materials serve as a basis for subdividing them into separate groups. For example, mineral binding materials are subdivided into air and hydraulic-setting varieties. The principal properties of building materials predetermine their applications. Only a comprehensive knowledge of the properties of materials allows a rational choice of materials for specific service conditions.

The importance of standardisation cannot be over emphasised. It requires the quality of materials and manufactured items to be not below a specific standard level. However, the importance of standardisation is not limited to this factor alone, since each revised standard places higher requirements upon the products than the preceding one, with the effect that the industry concerned has to keep up with the standards and improved production techniques. Thus, the industry of building materials gains both in quantity and quality, so that new, more efficient products are manufactured and the output of conventional materials is increased.

To develop products of greater economic efficiency, it is important to compare the performance of similar kinds of materials under specific service conditions. Expenditures for running an installation can be minimised by improving the quality of building materials and products. Building industry economists are thus required to have a good working knowledge, first, of the building materials, second, of their optimum applications on the basis of their principal properties, and, third, of their manufacturing techniques, in order that the buildings and installations may have optimum engineering, economic performance and efficiency. Having acquired adequate knowledge, an economist specialising in construction becomes an active participant in the development of the building industry and the manufacture of building materials.

## 1.2 PHYSICAL PROPERTIES

***Density* (ρ)** is the mass of a unit volume of homogeneous material denoted by

$$\rho = \frac{M}{V} \text{ g/cm}^3$$

where M = mass (g)
V = volume ($cm^3$)

Density of some building materials is as follows:

| *Material* | *Density ($g/cm^3$)* |
|---|---|
| Brick | 2.5–2.8 |
| Granite | 2.6–2.9 |
| Portland cement | 2.9–3.1 |
| Wood | 1.5–1.6 |
| Steel | 7.8–7.9 |

***Bulk Density* ($\rho_b$)** is the mass of a unit volume of material in its natural state (with pores and voids) calculated as

$$\rho_b = \frac{M}{V} \text{ kg/m}^3$$

where M = mass of specimen (kg)
V = volume of specimen in its natural state ($m^3$)

***Note:*** **Bulk density may be expressed in g/$cm^3$ but this presents some inconveniences, and this is why it is generally expressed in kg/$m^3$. For example, the bulk density of reinforced cement concrete is preferably expressed as 2500 kg/$m^3$ rather than 2.5 g/$cm^3$.**

For most materials, bulk density is less than density but for liquids and materials like glass and dense stone materials, these parameters are practically the same. Properties like strength and heat conductivity are greatly affected by their bulk density. Bulk densities of some of the building materials are as follows:

| *Material* | *Bulk density (kg/m$^3$)* |
|---|---|
| Brick | 1600–1800 |
| Granite | 2500–2700 |
| Sand | 1450–1650 |
| Pine wood | 500–600 |
| Steel | 7850 |

***Density Index* ($\rho_o$)** is the ratio,

$$\rho_o = \frac{\text{bulk density}}{\text{density}}$$

$$= \frac{\rho_b}{\rho}$$

It indicates the degree to which the volume of a material is filled with solid matter. For almost all building materials $\rho_o$ is less than 1.0 because there are no absolutely dense bodies in nature.

***Specific Weight* ($\gamma$)** also known as the unit weight) is the weight per unit volume of material,

$$\gamma = \rho \, . \, g$$

Where

$\gamma$ = specific weight (kN / m$^3$)
$\rho$ = density of the material (kg / m)
g = gravity (m / s$^2$)

Specific weight can be used in civil engineering to determine the weight of a structure designed to carry certain loads while remaining intact and remaining within limits regarding deformation. It is also used in fluid dynamics as a property of the fluid (e.g., the specific weight of water on Earth is 9.80 kN / m$^3$ at 4°C).

The terms *specific gravity*, and less often *specific weight*, are also used for relative density.

***Specific Gravity* ($G_s$)** of solid particles of a material is the ratio of weight / mass of a given volume of solids to the weight / mass of an equal volume of water at 4°C.

$$G_s = \frac{\gamma_s}{\gamma_w} = \frac{\rho_s}{\rho_w}$$

At 4° C $\gamma_w$ = 1 g / cc or 9.8 kN / m$^3$

***True or absolute specific gravity* ($G_a$)** If both the permeable and impermeable voids are excluded to determine the true volume of solids, the specific gravity is called true or absolute specific gravity.

$$G_a = \frac{(\rho_s)_a}{\rho_w}$$

The absolute specific gravity is not much of practical use.

***Apparent or mass specific gravity* ($G_m$)** If both the permeable and impermeable voids are included to determine the true volume of solids, the specific gravity is called apparent specific gravity. It is the ratio of mass density of fine grained material to the mass density of water.

$$G_m = \frac{\rho}{\rho_w}$$

***Porosity (n)*** is the degree to which volume of the material of the material is interspersed with pores. It is expressed as a ratio of the volume of pores to that of the specimen.

$$n = \frac{V_v}{V}$$

Porosity is indicative of other major properties of material, such as bulk density, heat conductivity, durability, etc. Dense materials, which have low porosity, are used for constructions requiring high mechanical strength on other hand, walls of buildings are commonly built of materials, featuring considerable porosity.

Following inter relationship exists between void ratio and the porosity.

$$n = \frac{e}{1+e}$$

***Void Ratio (e)*** is defined as the ratio of volume of voids ($V_v$) to the volume of solids ($V_s$).

$$e = \frac{V_v}{V_s}$$

If an aggregate is poured into a container of any sort it will be observed that not all of the space within the container is filled. To the vacant spaces between the particles of aggregate the name voids is applied. Necessarily, the percentage of voids like the specific weight is affected by the compactness of the aggregate and the amount of moisture which it contains. Generally void determinations are made on material measured loose.

There are two classes of methods commonly employed for measuring voids, the direct and the indirect. The most-used direct method consists in determining the volume of liquid, generally water, which is required to fill the voids in a given quantity of material. Since in poring water into fine aggregate it is impossible to expel all the air between the particles, the measured voids are smaller than the actual. It therefore becomes evident that the above direct method should not be used with fine aggregate unless the test is conducted in a vacuum. By the indirect method, the solid volume of a known quantity of aggregate is obtained by pouring the material into a calibrated tank partially filled with water; the difference between the apparent volume of material and the volume of water displaced equals the voids. If very accurate results are desired void measurements should be corrected for the porosity of the aggregate and moisture it contains.

***Hygroscopicity*** is the property of a material to absorb water vapour from air. It is influenced by air-temperature and relative humidity; pores—their types, number and size, and by the nature of substance involved.

***Water Absorption*** denotes the ability of the material to absorb and retain water. It is expressed as percentage in weight or of the volume of dry material:

$$W_w = \frac{M_1 - M}{M} \times 100$$

$$W_v = \frac{M_1 - M}{V} \times 100$$

where $M_1$ = mass of saturated material (g)

M = mass of dry material (g)
V = volume of material including the pores ($mm^3$)

Water absorption by volume is always less than 100 per cent, whereas that by weight of porous material may exceed 100 per cent.

The properties of building materials are greatly influenced when saturated. The ratio of compressive strength of material saturated with water to that in dry state is known as *coefficient of softening* and describes the water resistance of materials. For materials like clay which soak readily it is zero, whereas for materials like glass and metals it is one. Materials with coefficient of softening less than 0.8 should not be recommended in the situations permanently exposed to the action of moisture.

***Weathering Resistance*** is the ability of a material to endure alternate wet and dry conditions for a long period without considerable deformation and loss of mechanical strength.

***Water Permeability*** is the capacity of a material to allow water to penetrate under pressure. Materials like glass, steel and bitumen are impervious.

***Frost Resistance*** denotes the ability of a water-saturated material to endure repeated freezing and thawing with considerable decrease of mechanical strength. Under such conditions the water contained by the pores increases in volume even up to 9 per cent on freezing. Thus the walls of the pores experience considerable stresses and may even fail.

***Heat Conductivity*** is the ability of a material to conduct heat. It is influenced by nature of material, its structure, porosity, character of pores and mean temperature at which heat exchange takes place. Materials with large size pores have high heat conductivity because the air inside the pores enhances heat transfer. Moist materials have a higher heat conductivity than drier ones. This property is of major concern for materials used in the walls of heated buildings since it will affect dwelling houses.

***Thermal Capacity*** is the property of a material to absorb heat described by its specific heat. Thermal capacity is of concern in the calculation of thermal stability of walls of heated buildings and heating of a material, e.g. for concrete laying in winter.

***Fire Resistance*** is the ability of a material to resist the action of high temperature without any appreciable deformation and substantial loss of strength. Fire resistive materials are those which char, smoulder, and ignite with difficulty when subjected to fire or high temperatures for long period but continue to burn or smoulder only in the presence of flame, e.g. wood impregnated with fire proofing chemicals. Non-combustible materials neither smoulder nor char under the action of temperature. Some of the materials neither crack nor lose shape such as clay bricks, whereas some others like steel suffer considerable deformation under the action of high temperature.

***Refractoriness*** denotes the ability of a material to withstand prolonged action of high temperature without melting or losing shape. Materials resisting prolonged temperatures of 1580°C or more are known as refractory.

High-melting materials can withstand temperature from 1350–1580°C, whereas low-melting materials withstand temperature below 1350°C.

***Chemical Resistance*** is the ability of a material to withstand the action of acids, alkalis, sea water and gases. Natural stone materials, e.g. limestone, marble and dolomite are eroded even by weak acids, wood has low resistance to acids and alkalis, bitumen disintegrates under the action of alkali liquors.

***Durability*** is the ability of a material to resist the combined effects of atmospheric and other factors.

## 1.3 MECHANICAL PROPERTIES

The important mechanical properties considered for building materials are: strength, compressive, tensile, bending, impact, hardness, plasticity, elasticity and abrasion resistance.

***Strength*** is the ability of the material to resist failure under the action of stresses caused by loads, the most common being compression, tension, bending and impact. The importance of studying the various strengths will be highlighted from the fact that materials such as stones and concrete have high compressive strength but a low ($^1/_5$ to $^1/_{50}$) tensile, bending and impact strengths.

Compressive Strength is found from tests on standard cylinders, prisms and cubes—smaller for homogeneous materials and larger for less homogeneous ones. Prisms and cylinders have lower resistance than cubes of the same cross-sectional area, on the other hand prisms with heights smaller than their sides have greater strength than cubes. This is due to the fact that when a specimen is compressed the plattens of the compression testing machine within which the specimen is placed, press tight the bases of the specimen and the resultant friction forces prevent the expansion of the adjoining faces, while the central lateral parts of the specimen undergoes transversal expansion. The only force to counteract this expansion is the adhesive force between the particles of the material. That is why a section away from the press plates fails early.

The test specimens of metals for tensile strength are round bars or strips and that of binding materials are of the shape of figure eight.

Bending Strength tests are performed on small bars (beams) supported at their ends and subjected to one or two concentrated loads which are gradually increased until failure takes place.

***Hardness*** is the ability of a material to resist penetration by a harder body. Mohs scale is used to find the hardness of materials. It is a list of ten minerals arranged in the order of increasing hardness (Section 3.2). Hardness of metals and plastics is found by indentation of a steel ball.

***Elasticity*** is the ability of a material to restore its initial form and dimensions after the load is removed. Within the limits of elasticity of solid bodies, the deformation is proportional to the stress. Ratio of unit stress to unit deformation is termed as *modulus of elasticity*. A large value of it represents a material with very small deformation.

***Plasticity*** is the ability of a material to change its shape under load without cracking and to retain this shape after the load is removed. Some of the examples of plastic materials are steel, copper and hot bitumen.

## 1.4 CHARACTERISTIC BEHAVIOUR UNDER STRESS

The common characteristics of building materials under stress are ductility, brittleness, stiffness, flexibility, toughness, malleability and hardness.

The *ductile* materials can be drawn out without necking down, the examples being copper and wrought iron. *Brittle* materials have little or no plasticity. They fail suddenly without warning. Cast iron, stone, brick and concrete are comparatively brittle materials having a considerable amount of plasticity. *Stiff materials* have a high modulus of elasticity permitting small deformation for a given load. *Flexible* materials on the other hand have low modulus of elasticity and bend considerably without breakdown. *Tough* materials withstand heavy shocks. Toughness depends upon strength and flexibility. *Malleable* materials can be hammered into sheets without rupture. It depends upon ductility and softness of material. Copper is the most malleable material. *Hard* materials resist scratching and denting, for example cast iron and chrome steel. Materials resistant to abrasion such as manganese are also known as hard materials.

## EXERCISES

l. (a) Why is it important to study the properties of building materials?
   (b) List and define the physical properties of building materials.
2. (a) What are the factors influencing the choice of a building material?
   (b) Why is it important to make standards for building materials?
3. Define the following:
   (a) Density
   (b) Bulk density
   (c) Density index
   (d) Specific weight
   (e) Porosity
   (f) Void ratio
4. Write short notes on the following:
   (a) Refractoriness
   (b) Heat conductivity
   (c) Selection of building materials
   (d) Fire resistive materials

# 2

# STRUCTURAL CLAY PRODUCTS

## 2.1 INTRODUCTION

Clay products are one of the most important classes of structural materials. The raw materials used in their manufacture are clay blended with quartz, sand, chamatte (refractory clay burned at 1000–1400°C and crushed), slag, sawdust and pulverized coal. Structural clay products or building ceramics* are basically fabricated by moulding, drying and burning a clay mass. Higher the bulk specific gravity, the stronger is the clay product. This rule does not hold good for vitrified products since the specific gravity of clay decreases as vitrification advances.

Bulk specific gravity of clay brick ranges from 1.6 to 2.5.

According to the method of manufacture and structure, bricks, tiles, pipes, terracotta, earthenwares, stonewares, porcelain, and majolica are well recognized and employed in building

---

*** Polycrystalline materials and products formed by baking natural clays and mineral admixtures at a high temperature and also by sintering the oxides of various metals and other high melting-point inorganic substances.**

construction. Clay bricks have pleasing appearance, strength and durability whereas clay tiles used for light-weight partition walls and floors possess high strength and resistance to fire. Clay pipes on account of their durability, strength, lightness and cheapness are successfully used in sewers, drains and conduits.

## 2.2 CLAY AND ITS CLASSIFICATIONS

Clay is the most important raw material used for making bricks. It is an earthen mineral mass or fragmentary rock capable of mixing with water and forming a plastic viscous mass which has a property of retaining its shape when moulded and dried. When such masses are heated to redness, they acquire hardness and strength. This is a result of micro-structural changes in clay and as such is a chemical property. Purest clays consist mainly of kaolinite ($2SiO_2.Al_2O_3.2H_2O$) with small quantities of minerals such as quartz, mica, felspar, calcite, magnesite, etc. By their origin, clays are subdivided as residual and transported clays. Residual clays, known as Kaolin or China clay, are formed from the decay of underlying rocks and are used for making pottery. The transported or sedimentary clays result from the action of weathering agencies. These are more disperse, contain impurities, and free from large particles of mother rocks.

On the basis of resistance to high temperatures (more than 1580°C), clays are classified as refractory, high melting and low melting clays. The refractory clays are highly disperse and very plastic. These have high content of alumina and low content of impurities, such as $Fe_2O_3$, tending to lower the refractoriness. High melting clays have high refractoriness (1350–1580°C) and contain small amount of impurities such as quartz, felspar, mica, calcium carbonate and magnesium carbonate. These are used for manufacturing facing bricks, floor tiles, sewer pipes, etc. Low melting clays have refractoriness less than 1350°C and have varying compositions. These are used to manufacture bricks, blocks, tiles, etc.

Admixtures are added to clay to improve its properties, if desired. Highly plastic clays which require mixing water up to 28 per cent, give high drying and burning shrinkage, call for addition of lean admixtures or non-plastic substances such as quartz sand, chamottee, ash, etc. Items of lower bulk density and high porosity are obtained by addition of admixture that burn out. The examples of burning out admixtures are sawdust, coal fines, pulverized coal. etc. Acid resistance items and facing tiles are manufactured from clay by addition of water-glass or alkalis.

Burning temperature of clay items can be reduced by blending clay with fluxes such as felspar, iron bearing ores, etc. Plasticity of moulding mass may be increased by adding surfactants such as sulphite-sodium vinasse (0.1–0.3%).

## 2.3 PHYSICAL PROPERTIES OF CLAYS

Plasticity, tensile strength, texture, shrinkage, porosity, fusibility and colour after burning are the physical properties which are the most important in determining the value of clay. Knowledge of these properties is of more benefit in judging the quality of the raw material than a chemical analysis.

By plasticity is meant the property which wetted clay has of being permanently deformed without cracking. The amount of water required by different clays to produce the most plastic condition varies from 15 to 35 per cent. Although plasticity is the most important physical property of clay, yet there are no methods of measuring it which are entirely satisfactory. The simplest and the most used test is afforded by feeling of the wetted clay with the fingers. Personal equation necessarily plays a large part in such determination.

Since clay ware is subjected to considerable stress in moulding, handling and drying, a high tensile strength is desirable. The test is made by determining the stregth of specimens which have been moulded into briquette form and very carefully dried.

The texture of clay is measured by the fineness of its grains. In rough work the per cent passing a No. 100 sieve is determined. No numerical limit to the grain size or desired relation between sizes has been established. Very fine grained clays free from sand are more plastic and shrink more than those containing coarser material.

Knowledge of shrinkage both in drying and in burning is required in order to produce a product of required size. Also the amount of shrinkage forms an index of the degree of burning. The shrinkage in drying is dependent upon pore space within the clay and upon the amount of mixing water. The addition of sand or ground burnt clay lowers shrinkage, increases the porosity and facilitates drying. Fire shrinkage is dependent upon the proportion of volatile elements, upon texture and the way that clay burns.

By porosity of clay is meant the ratio if the volume of pore space to the dry volume. Since porosity affects the proportion of water required to make clay plastic, it will indirectly influence air shrinkage. Large pores allow the water to evaporate more easily and consequently permit a higher rate of drying than do small pores. In as much as the rate at which the clay may be safely dried is of great importance in manufacturing clay products, the effect of porosity on the rate of drying should be considered.

The temperature at which clay fuses is determined by the proportion of fluxes, texture, homogeneity of the material, character of the flame and its mineral constitution. Owing to non-uniformity in composition, parts of the clay body melt at different rates so that the softening period extends over a considerable range both of time and temperature. This period is divided into incipient vitrification and viscous vitrification.

Experiments roughly indicate that the higher the proportion of fluxes the lower the melting point. Fine textured clays fuse more easily than those of coarser texture and the same mineral composition. The uniformity of the clay mass determines very largely the influence of various elements; the carbonate of lime in large lumps may cause popping when present in small percentages, but when finely ground 15 per cent of it may be allowed in making brick or tile. Lime combined with silicate of alumina (feldspar) forms a desirable flux. Iron in the ferrous form, found in carbonates and in magnetite, fuses more easily than when present as ferric iron. If the kiln atmosphere is insufficiently oxidizing in character during the early stages of burning, the removal of carbon and sulphur will be prevented until the mass has shrunk to such an extent as to prevent their expulsion and the oxidation of iron. When this happens, a product with a discoloured core or swollen body is likely to result.

A determination of the fusibility of a clay is of much importance both in judging of the cost of burning it and in estimating its refractoriness.

## 2.4 BRICKS

One of the oldest building material brick continues to be a most popular and leading construction material because of being cheap, durable and easy to handle and work with. Clay bricks are used for building-up exterior and interior walls, partitions, piers, footings and other load bearing structures.

A brick is rectangular in shape and of size that can be conveniently handled with one hand. Brick may be made of burnt clay or mixture of sand and lime or of Portland cement concrete. Clay bricks are commonly used since these are economical and easily available. The length, width and height of a brick are interrelated as below:

Length of brick = 2 × width of brick + thickness of mortar

Height of brick = width of brick

Size of a standard brick (also known as modular brick) should be 19 × 9 × 9 cm and 19 × 9 × 4 cm. When placed in masonry the 19 × 9 × 9 cm brick with mortar becomes 20 × 10 × 10 cm. However, the bricks available in most part of the country still are $9'' \times 4\frac{1}{2}'' \times 3''$ and are known as field bricks. Weight of such a brick is 3.0 kg. An indent called frog, 1–2 cm deep, as shown in Fig. 2.1, is provided for 9 cm high bricks. The size of frog should be 10 × 4 × 1 cm. The purpose of providing frog is to form a key for holding the mortar and therefore, the bricks are laid with frogs on top. Frog is not provided in 4 cm high bricks and extruded bricks.

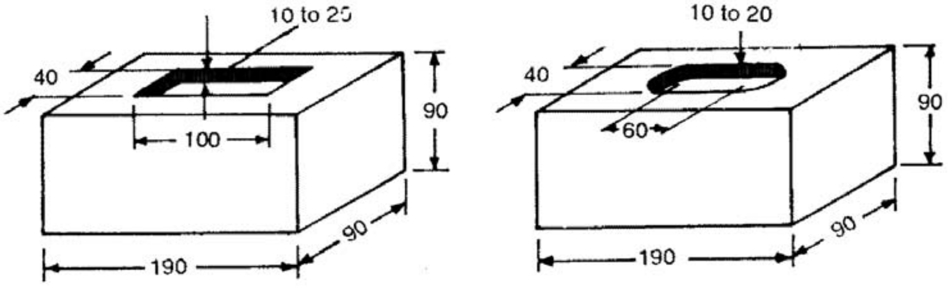

Fig. 2.1 Bricks with Frog

## 2.5 CLASSIFICATION OF BRICKS

### On Field Practice

Clay bricks are classified as first class, second class, third class and fourth class based on their physical and mechanical properties.

#### *First Class Bricks*

1. These are thoroughly burnt and are of deep red, cherry or copper colour.
2. The surface should be smooth and rectangular, with parallel, sharp and straight edges and square corners.
3. These should be free from flaws, cracks and stones.
4. These should have uniform texture.
5. No impression should be left on the brick when a scratch is made by a finger nail.
6. The fractured surface of the brick should not show lumps of lime.
7. A metallic or ringing sound should come when two bricks are struck against each other.
8. Water absorption should be 12–15% of its dry weight when immersed in cold water for 24 hours.

9. The crushing strength of the brick should not be less than 10 $N/mm^2$. This limit varies with different Government organizations around the country.

Uses: First class bricks are recommended for pointing, exposed face work in masonry structures, flooring and reinforced brick work.

***Second Class Bricks*** are supposed to have the same requirements as the first class ones except that

1. Small cracks and distortions are permitted.
2. A little higher water absorption of about 16–20% of its dry weight is allowed.
3. The crushing strength should not be less than 7.0 $N/mm^2$.

Uses: Second class bricks are recommended for all important or unimportant hidden masonry works and centering of reinforced brick and reinforced cement concrete (RCC) structures.

***Third Class Bricks*** are underburnt. They are soft and light-coloured producing a dull sound when struck against each other. Water absorption is about 25 per cent of dry weight.

Uses : It is used for building temporary structures.

***Fourth Class Bricks*** are overburnt and badly distorted in shape and size and are brittle in nature.

Uses: The ballast of such bricks is used for foundation and floors in lime concrete and road metal.

## On Strength

The Bureau of Indian Standards (BIS) has classified the bricks on the basis of compressive strength and is as given in Table 2.1.

**Table 2.1 Classification of Bricks based on Compressive Strength (IS: 1077)**

| *Class* | *Average compressive strength not less than ($N/mm^2$)* |
|---|---|
| 35 | 35.0 |
| 30 | 30.0 |
| 25 | 25.0 |
| 20 | 20.0 |
| 17.5 | 17.5 |
| 15 | 15.0 |
| 12.5 | 12.5 |
| 10 | 10.0 |
| 7.5 | 7.5 |
| 5 | 5.0 |
| 3.5 | 3.5 |

***Notes:*** **1. The burnt clay bricks having compressive strength more than 40.0 $N/mm^2$ are known as heavy duty bricks and are used for heavy duty structures such as bridges, foundations for industrial buildings, multistory buildings, etc. The water absorption of these bricks is limited to 5 per cent.**

**2. Each class of bricks as specified above is further divided into subclasses A and B based on tolerances and shape. Subclass-A bricks should have smooth rectangular faces with sharp corners and uniform colour. Subclass-B bricks may have slightly distorted and round edges.**

| | *Subclass-A* | | *Subclass-B* | |
|---|---|---|---|---|
| | *Dimension (cm)* | *Tolerance (mm)* | *Dimension (cm)* | *Tolerance (mm)* |
| Length | 380 | ± 12 | 380 | ± 30 |
| Width | 180 | ± 6 | 180 | ± 15 |
| Height | | | | |
| (i) 9 cm | 180 | ± 6 | 180 | ± 15 |
| (ii) 4 cm | 80 | ± 3 | 80 | ± 6 |

## On the Basis of Use

***Common Brick*** is a general multi-purpose unit manufactured economically without special reference to appearance. These may vary greatly in strength and durability and are used for filling, backing and in walls where appearance is of no consequence.

***Facing Bricks*** are made primarily with a view to have good appearance, either of colour or texture or both. These are durable under severe exposure and are used in fronts of building walls for which a pleasing appearance is desired.

***Engineering Bricks*** are strong, impermeable, smooth, table moulded, hard and conform to defined limits of absorption and strength. These are used for all load bearing structures.

## On the Basis of Finish

***Sand-faced Brick*** has textured surface manufactured by sprinkling sand on the inner surfaces of the mould.

***Rustic Brick*** has mechanically textured finish, varying in pattern.

## On the Basis of Manufacture

***Hand-made:*** These bricks are hand moulded.

***Machine-made:*** Depending upon mechanical arrangement, bricks are known as wire-cut bricks—bricks cut from clay extruded in a column and cut off into brick sizes by wires; pressed-bricks—when bricks are manufactured from stiff plastic or semi-dry clay and pressed into moulds; moulded bricks—when bricks are moulded by machines imitating hand mixing.

## On the Basis of Burning

***Pale Bricks*** are underburnt bricks obtained from outer portion of the kiln.

***Body Bricks*** are well burnt bricks occupying central portion of the kiln.

***Arch Bricks*** are overburnt also known as clinker bricks obtained from inner portion of the kiln.

## On the Basis of Types

***Solid:*** Small holes not exceeding 25 per cent of the volume of the brick are permitted; alternatively, frogs not exceeding 20 per cent of the total volume are permitted.

***Perforated:*** Small holes may exceed 25 per cent of the total volume of the brick.

***Hollow:*** The total of holes, which need not be small, may exceed 25 per cent of the volume of the brick.

***Cellular:*** Holes closed at one end exceed 20 per cent of the volume.

***Note:*** **Small holes are less than 20 mm or less than 500 mm$^2$ in cross section.**

## 2.6 CHARACTERISTICS OF GOOD BRICK

The essential requirements for building bricks are sufficient strength in crushing, regularity in size, a proper suction rate, and a pleasing appearance when exposed to view.

***Size and Shape:*** The bricks should have uniform size and plane, rectangular surfaces with parallel sides and sharp straight edges.

***Colour:*** The brick should have a uniform deep red or cherry colour as indicative of uniformity in chemical composition and thoroughness in the burning of the brick.

***Texture and Compactness:*** The surfaces should not be too smooth to cause slipping of mortar. The brick should have precompact and uniform texture. A fractured surface should not show fissures, holes grits or lumps of lime.

***Hardness and Soundness:*** The brick should be so hard that when scratched by a finger nail no impression is made. When two bricks are struck together, a metallic sound should be produced.

***Water Absorption*** should not exceed 20 per cent of its dry weight when kept immersed in water for 24 hours.

***Crushing Strength*** should not be less than 10 N/mm$^2$.

***Brick Earth*** should be free from stones, kankars, organic matter, saltpetre, etc.

## 2.7 INGREDIENTS OF GOOD BRICK EARTH

For the preparation of bricks, clay or other suitable earth is moulded to the desired shape after subjecting it to several processes. After drying, it should not shrink and no crack should develop. The clay used for brick making consists mainly of silica and alumina mixed in such a proportion that the clay becomes plastic when water is added to it. It also consists of small proportions of lime, iron, manganese, sulphur, etc. The proportions of various ingredients are as follows:

| | | |
|---|---|---|
| Silica | 50–60% | |
| Alumina | 20–30% | |
| Lime | 10% | |
| Magnesia | < 1% | Less than 20% |
| Ferric oxide | < 7% | |
| Alkalis | < 10% | |
| Carbon dioxide | Very small percentage | |
| Sulphur trioxide | | |
| Water | | |

### Functions of Various Ingredients

***Silica:*** It enables the brick to retain its shape and imparts durability, prevents shrinkage and warping. Excess of silica makes the brick brittle and weak on burning. A large percentage of sand or uncombined silica in clay is undesirable. However, it is added to decrease shrinkage in burning and to increase the refractoriness of low alumina clays.

***Alumina*** absorbs water and renders the clay plastic. If alumina is present in excess of the specified quantity, it produces cracks in brick on drying. Clays having exceedingly high alumina content are likely to be very refractory.

***Lime*** normally constitutes less than 10 per cent of clay. Lime in brick clay has the following effects:

1. Reduces the shrinkage on drying.
2. Causes silica in clay to melt on burning and thus helps to bind it.
3. In carbonated form, lime lowers the fusion point.
4. Excess of lime causes the brick to melt and the brick looses its shape.
5. Red bricks are obtained on burning at considerably high temperature (more than 800°C) and buff-burning bricks are made by increasing the lime content.

***Magnesia*** rarely exceeding 1 per cent, affects the colour and makes the brick yellow, in burning; it causes the clay to soften at slower rate than in most case is lime and reduces warping.

***Iron*** Iron oxide constituting less than 7 per cent of clay, imparts the following properties:

1. Gives red colour on burning when excess of oxygen is available and dark brown or even black colour when oxygen available is insufficient, however, excess of ferric oxide makes the brick dark blue.
2. Improves impermeability and durability.
3. Tends to lower the fusion point of the clay, especially if present as ferrous oxide.
4. Gives strength and hardness.

## 2.8 HARMFUL SUBSTANCES IN BRICK EARTH

***Lime:*** When a desirable amount of lime is present in the clay, it results in good bricks, but if in excess, it changes the colour of the brick from red to yellow. When lime is present in lumps, it absorbs moisture, swells and causes disintegration of the bricks. Therefore, lime should be present in finely divided state and lumps, if any, should be removed in the beginning itself. Experience has shown, however, that when line particles smaller than 3 mm diameter hydrate they produce only small *pock mark* which, provided that there are not many of them, can usually be ignored. Particles larger than this might, if present in any quantity, cause unsightly blemishes or even severe cracking.

***Pebbles, Gravels, Grits*** do not allow the clay to be mixed thoroughly and spoil the appearance of the brick. Bricks with pebbles and gravels may crack while working.

***Iron Pyrites*** tend to oxidise and decompose the brick during burning. The brick may split into pieces. Pyrites discolourise the bricks.

***Alkalis (Alkaline salts)*** forming less than 10 per cent of the raw clay, are of great value as fluxes, especially when combined with silicates of alumina. These are mainly in the form of soda or potash. However, when present in excess, alkali makes the clay unsuitable for bricks. They melt the clay on burning and make the bricks unsymmetrical. When bricks come in contact with moisture, water is absorbed and the alkalis crystallise. On drying, the moisture evaporates, leaving behind grey or white powder deposits on the brick which spoil the appearance. This phenomenon is called *efflorescence*. Efflorescence should always be dry brushed away before rendering or plastering a wall; wetting it will carry the salts back into the wall to reappear later.

If bricks become saturated before the work is completed, the probability of subsequent efflorescence is increased, brick stacks should, therefore be protected from rain at all times. During laying, the bricks should be moistened only to the extent that is found absolutely essential to obtain adequate bond between bricks and mortar; newly built brickwork should be protected from rain.

***Organic Matter:*** On burning green bricks, the organic matter gets charred and leave pores making the bricks porous; the water absorption is increased and the strength is reduced.

***Carbonaceous Materials*** in the form of bituminous matter or carbon greatly affects the colour of raw clay. Unless proper precaution is taken to effect complete removal of such matter by oxidation, the brick is likely to have a black core.

***Sulphur*** is usually found in clay as the sulphate of calcium, magnesium, sodium, potassium or iron, or as iron sulphide. Generally, the proportion is small. If, however, there is carbon in the clay and insufficient time is given during burning for proper oxidation of carbon and sulphur, the latter will cause the formation of a spongy, swollen structure in the brick and the brick will be decoloured by white blotches.

***Water:*** A large proportion of free water generally causes clay to shrink considerably during drying, whereas combined water causes shrinkage during burning. The use of water containing small quantities of magnesium or calcium carbonates, together with a sulphurous fuel often causes similar effects as those by sulphur.

## 2.9 MANUFACTURING OF BRICKS

### Additives in the Manufacture of Bricks

Certain additives such as fly ash, sandy loam, rice husk ash, basalt stone dust, etc. are often required not only to modify the shaping, drying and firing behaviour of clay mass, but also to help conserve agricultural land and utilise waste materials available in large quantities. These additives should, however, have a desirable level of physical and chemical characteristics so as to modify the behaviour of clay mass within the optimum range without any adverse effect on the performance and durability. Some of the basic physio-chemical requirements of conventional additives are as under:

***Fly Ash:*** A waste material available in large quantities from thermal power plants can be added to alluvial, red, black, marine clays, etc. The fly ash contains amorphous glassy material, mullite, haematite, magnetite, etc. and shows a chemical composition similar to brick earths. These silicates also help towards strength development in clay bodies on firing, when mixed in optimum proportion depending on the physio-chemical and plastic properties of soils to be used for brick making. The proportion of fly ash mixed as an additive to the brick earth should be optimum to reduce drying shrinkage, check drying losses and to develop strength on firing without bloating or black coring in fired product. The crystallites present in the fly ash should comply with the resultant high temperature phases in the finished product.

The desirable characteristics of fly ash which could be used as an additive to the soil mass are given in Table 2.2.

**Table 2.2 Desirable Characteristics of Fly Ash for Use as an Admixture with Brick Earths**

| *S.No.* | *Characteristics* | *Desired level* |
|---|---|---|
| 1. | Texture | Fineness, 200 to 300 m$^2$/kg |
| 2. | Maximum coarse material (+ 1 mm) | 0.5% |
| 3. | Maximum unburnt carbon per cent by mass | 15% |
| 4. | Maximum water soluble per cent by mass | 0.1% |

***Sandy Loam:*** Addition of sandy loam is often found effective in controlling the drying behaviour of highly plastic soil mass containing expanding group of clay minerals. Sandy loam should preferably have a mechanical composition as specified below. The material should, however, meet the other requirement as well.

| | | |
|---|---|---|
| Clay | (< 2 micron) | 8–10% |
| Silt | (2–20 micron) | 30–50% |
| Sand | (> 20 micron) | 40–60% |

***Rice Husk Ash:*** The ash should preferably have unburnt carbon content in the range of 3–5% and should be free from extraneous material. It can be used with plastic black red soils showing excessive shrinkage.

***Basalt Stone Dust:*** Basalt stone occurs underneath the black cotton soil and its dust is a waste product available in large quantity from basalt stone crushing units. The finer fraction from basalt stone units is mixed with soil mass to modify the shaping, drying and firing behaviour of bricks. The dust recommended for use as an additive with brick earth should be fine (passing 1 mm sieve), free from coarse materials or mica flakes and should be of non-calcitic or dolomitic origin.

The operations involved in the manufacture of clay bricks are represented diagrammatically in Fig. 2.2.

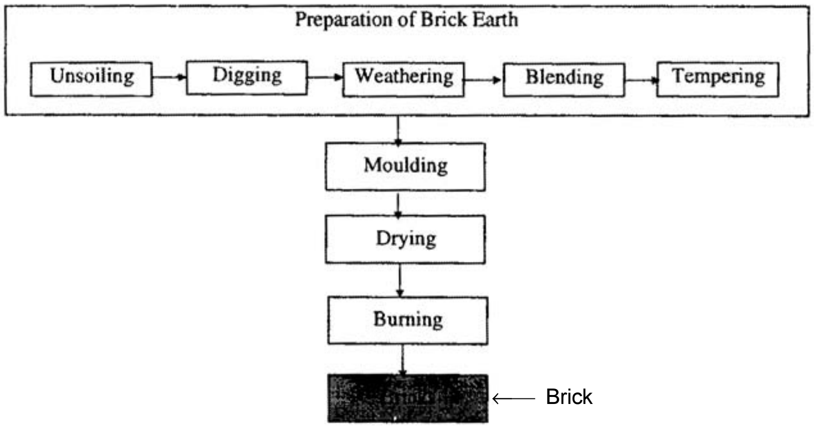

**Fig. 2.2 Operations Involved in Manufacturing of Clay Bricks**

## Preparation of Brick Earth

It consists of the following operations.

***Unsoiling:*** The soil used for making building bricks should be processed so as to be free of gravel, coarse sand (practical size more than 2 mm), lime and kankar particles, organic matter, etc. About 20 cm of the top layer of the earth, normally containing stones, pebbles, gravel, roots, etc., is removed after clearing the trees and vegetation.

***Digging:*** After removing the top layer of the earth, proportions of additives such as fly ash, sandy loam, rice husk ash, stone dust, etc. should be spread over the plane ground surface on volume basis. The soil mass is then manually excavated, puddled, watered and left over for weathering and subsequent processing. The digging operation should be done before rains.

***Weathering:*** Stones, gravels, pebbles, roots, etc. are removed from the dug earth and the soil is heaped on level ground in layers of 60–120 cm. The soil is left in heaps and exposed to weather for at least one month in cases where such weathering is considered necessary for the soil. This is done to develop homogeneity in the mass of soil, particularly if they are from different sources, and also to eliminate the impurities which get oxidized. Soluble salts in the clay would also be eroded by rain to some extent, which otherwise could have caused scumming at the time of burning of the bricks in the kiln. The soil should be turned over at least twice and it should be ensured that the entire soil is wet throughout the period of weathering. In order to keep it wet, water may be sprayed as often as necessary. The plasticity and strength of the clay are improved by exposing the clay to weather.

***Blending:*** The earth is then mixed with sandy-earth and calcareous-earth in suitable proportions to modify the composition of soil. Moderate amount of water is mixed so as to obtain the right consistency for moulding. The mass is then mixed uniformly with spades. Addition of water to the soil at the dumps is necessary for the easy mixing and workability, but the addition of water should be controlled in such a way that it may not create a problem in moulding and drying. Excessive moisture content may effect the size and shape of the finished brick.

***Tempering:*** Tempering consists of kneading the earth with feet so as to make the mass stiff and plastics (by plasticity, we mean the property which wet clay has of being permanently deformed without cracking). It should preferably be carried out by storing the soil in a cool place in layers of about 30 cm thickness for not less than 36 hours. This will ensure homogeneity in the mass of clay for subsequent processing. For manufacturing good brick, tempering is done in pug mills and the operation is called *pugging.*

Pug mill consists of a conical iron tube as shown in Fig. 2.3. The mill is sunk 60 cm into the earth. A vertical shaft, with a number of horizontal arms fitted with knives, is provided at the centre of the tube. This central shaft is rotated with the help of bullocks yoked at the end of long arms. However, steam, diesel or electric power may be used for this purpose. Blended earth along with required water, is fed into the pug mill from the top. The knives cut through the clay and break all the clods or lump-clays when the shaft rotates. The thoroughly pugged clay is then taken out from opening provided in the side near the bottom. The yield from a pug mill is about 1500 bricks.

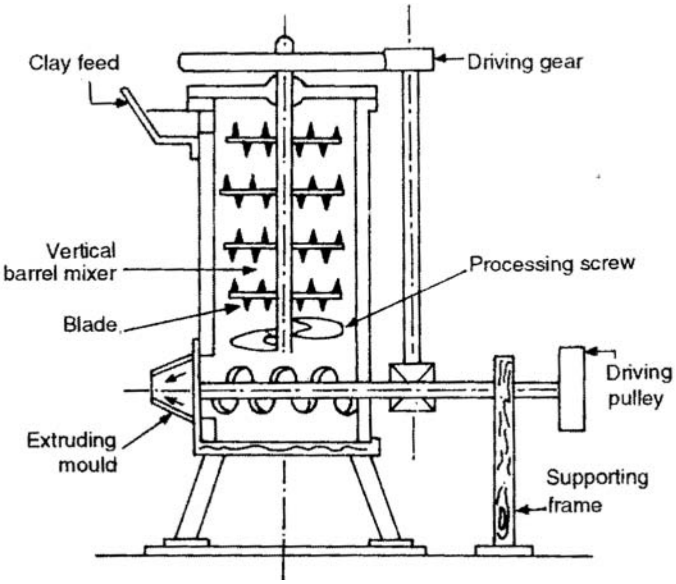

**Fig. 2.3 Pug Mill**

## Moulding

It is a process of giving a required shape to the brick from the prepared brick earth. Moulding may be carried out by hand or by machines. The process of moulding of bricks may be the soft-mud (hand moulding), the stiff-mud (machine moulding) or the dry-press process (moulding using maximum 10 per cent water and forming bricks at higher pressures). Fire-brick is made by the soft mud process. Roofing, floor and wall tiles are made by dry-press method. However, the stiff-mud process is used for making all the structural clay products.

***Hand Moulding:*** A typical mould is shown in Fig. 2.4. Hand moulding is further classified as ground moulding and table moulding.

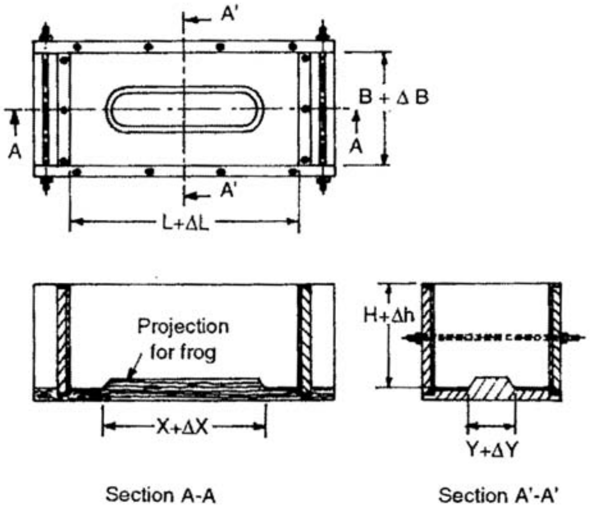

Section A-A

Section A'-A'

**Fig. 2.4 Details of Mould**

***Ground Moulding:*** In this process, the ground is levelled and sand is sprinkled on it. The moulded bricks are left on the ground for drying. Such bricks do not have frog and the lower brick surface becomes too rough. To overcome these defects, moulding blocks or boards are used at the base of the mould. The process consists of shaping in hands a lump of well pugged earth, slightly more than that of the brick volume. It is then rolled into the sand and with a jerk it is dashed into the mould. The moulder then gives blows with his fists and presses the earth properly in the corners of the mould with his thumb. The surplus clay on the top surface is removed with a sharp edge metal plate called *strike* (Fig. 2.5) or with a thin wire stretched over the mould. After this the mould is given a gentle slope and is lifted leaving the brick on the ground to dry.

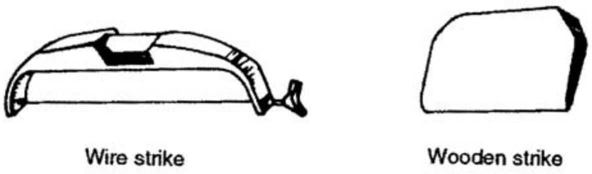
Wire strike
Wooden strike

**Fig. 2.5 Strikes**

***Notes:*** **(i) This method is adopted when a large and level land is available.**

**(ii) To prevent the moulded bricks from sticking to the side of the mould, sand is sprinkled on the inner sides of the mould, or the mould may be dipped in water every time before moulding is done. The bricks so produced are respectively called sand moulded and slop moulded bricks, the former being better since they provide sufficient rough surface necessary for achieving a good bond between bricks and mortar.**

***Table Moulding:*** The bricks are moulded on stock boards nailed on the moulding table (Fig. 2.6). Stock boards have the projection for forming the frog. The process of filling clay in the mould is the same as explained above. After this, a thin board called *pallet* is placed over the mould. The mould containing the brick is then smartly lifted off the stock board and inverted so that the moulded clay along with the mould rests on the pallet. The mould is then removed as explained before and the brick is carried to the drying site.

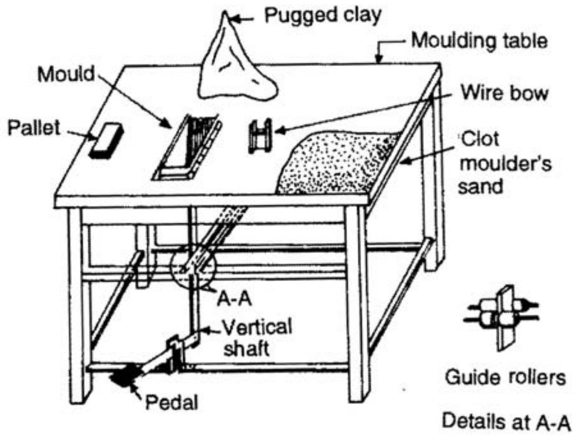

**Fig. 2.6(a) Brick Moulding Table**

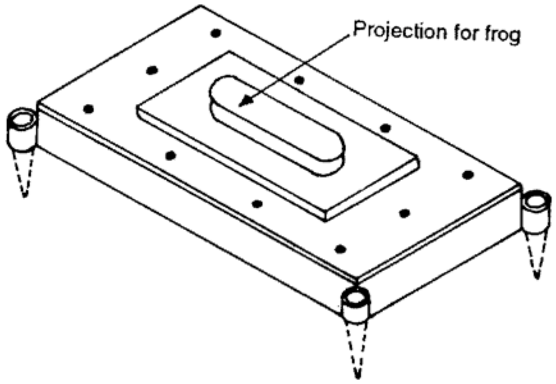

**Fig. 2.6(b) Stock Board**

***Machine Moulding*** can be done by either of the following processes:

*Plastic Method:* The pugged, stiffer clay is forced through a rectangular opening of brick size by means of an auger. Clay comes out of the opening in the form of a bar. The bricks are cut from the bar by a frame consisting of several wires at a distance of brick size as shown in Fig. 2.7. This is a quick and economical process.

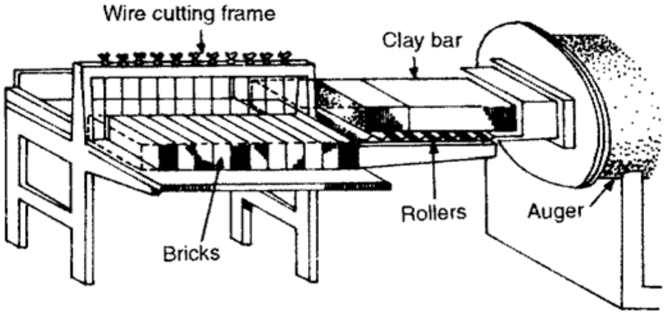

**Fig. 2.7 Plastic Moulding**

*Dry-press Method:* The moist, powdered clay is fed into the mould on a mechanically operated press, where it is subjected to high pressure and the clay in the mould takes the shape of bricks. Such pressed bricks are more dense, smooth and uniform than ordinary bricks. These are burnt carefully as they are likely to crack.

## Drying

Green bricks contain about 7–30% moisture depending upon the method of manufacture. The object of drying is to remove the moistre to control the shrinkage and save fuel and time during burning. The drying shrinkage is dependent upon pore spaces within the clay and the mixing water. The addition of sand or ground burnt clay reduces shrinkage, increases porosity and facilities drying. The moisture content is brought down to about 3 per cent under exposed conditions within three to four days. Thus, the strength of the green bricks is increased and the bricks can be handled safely.

Clay products can be dried in open air driers or in artificial driers. The artificial driers are of two types, the hot floor drier and the tunnel drier. In the former, heat is applied by a furnance placed at one end of the drier or by exhaust steam from the engine used to furnish power and is used for fire bricks, clay pipes and terracotta. Tunnel driers are heated by fuels underneath, by steam pipes, or by hot air from cooling kilns. They are more economical than floor driers. In artificial driers, temperature rarely exceeds 120°C. The time varies from one to three days. In developing countries, bricks are normally dried in natural open air driers (Fig. 2.8). They are stacked on raised ground

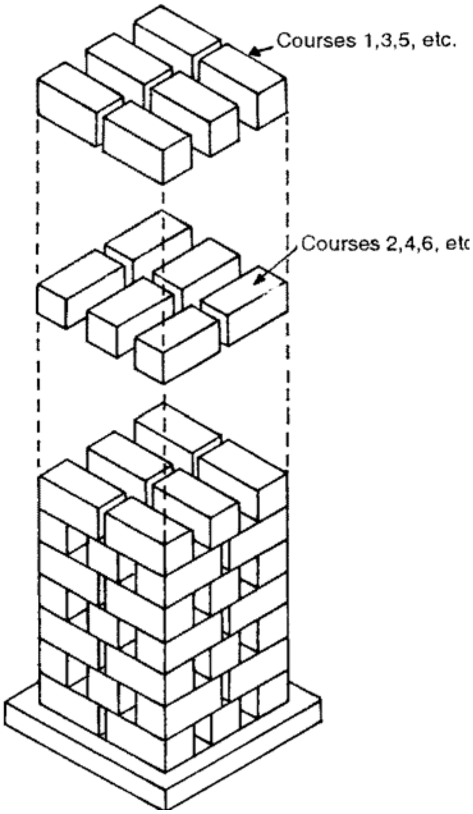

**Fig. 2.8 Method of Drying Bricks**

and are protected from bad weather and direct sunlight. A gap of about 1.0 m is left in the adjacent layers of the stacks so as to allow free movement for the workers.

## Burning

The burning of clay may be divided into three main stages.

*Dehydration (400–650°C):* This is also known as water smoking stage. During dehydration, (1) the water which has been retained in the pores of the clay after drying is driven off and the clay loses its plasticity, (2) some of the carbonaceous matter is burnt, (3) a portion of sulphur is distilled from pyrites. (4) hydrous minerals like ferric hydroxide are dehydrated, and (5) the carbonate minerals are more or less decarbonated. Too rapid heating causes cracking or bursting of the bricks. On the other hand, if alkali is contained in the clay or sulphur is present in large amount in the coal, too slow heating of clay produces a scum on the surface of the bricks.

*Oxidation Period (650–900°C):* During the oxidation period, (1) remainder of carbon is eliminated and, (2) the ferrous iron is oxidized to the ferric form. The removal of sulphur is completed only after the carbon has been eliminated. Sulphur on account of its affinity for oxygen, also holds back the oxidation of iron. Consequently, in order to avoid black or spongy cores, oxidation must proceed at such a rate which will allow these changes to occur before the heat becomes sufficient to soften the clay and close its pore. Sand is often added to the raw clay to produce a more open structure and thus provide escape of gases generated in burning.

***Vitrification***—To convert the mass into glass like substance — the temperature ranges from 900–1100°C for low melting clay and 1000–1250°C for high melting clay. Great care is required in cooling the bricks below the cherry red heat in order to avoid checking and cracking. Vitrification period may further be divided into (a) incipient vitrification, at which the clay has softened sufficiently to cause adherence but not enough to close the pores or cause loss of space—on cooling the material cannot be scratched by the knife; (b) complete vitrification, more or less well-marked by maximum shrinkage; (c) viscous vitrification, produced by a further increase in temperature which results in a soft molten mass, a gradual loss in shape, and a glassy structure after cooling. Generally, clay products are vitrified to the point of viscosity. However, paving bricks are burnt to the stage of complete vitrification to achieve maximum hardness as well as toughness.

Burning of bricks is done in a clamp or kiln. A clamp is a temporary structure whereas kiln is a permanent one.

***Burning in Clamp or Pazawah:*** A typical clamp is shown in Fig. 2.9. The bricks and fuel are placed in alternate layers. The amount of fuel is reduced successively in the top layers. Each brick tier consists of 4–5 layers of bricks. Some space is left between bricks for free circulation of hot gasses. After 30 per cent loading of the clamp, the fuel in the lowest layer is fired and the remaining loading of bricks and fuel is carried out hurriedly. The top and sides of the clamp are plastered with mud. Then a coat of cowdung is given, which prevents the escape of heat. The production of bricks is 2–3 lacs and the process is completed in six months. This process yields about 60 per cent first class bricks.

***Kiln Burning:*** The kiln used for burning bricks may be underground, e.g. Bull's trench kiln or overground, e.g. Hoffman's kiln. These may be rectangular, circular or oval in shape. When the process of burning bricks is continuous, the kiln is known as continuous kiln, e.g. Bull's trench and Hoffman's kilns. On the other hand if the process of burning bricks is discontinuous, the kiln is known as intermittent kiln.

*Intermittent Kiln:* The example of this type of an over ground, rectangular kiln is shown in Fig. 2.10. After loading the kiln, it is fired, cooled and unloaded and then the next loading is done. Since the walls and sides get cooled during reloading and are to be heated again during next firing, there is wastage of fuel.

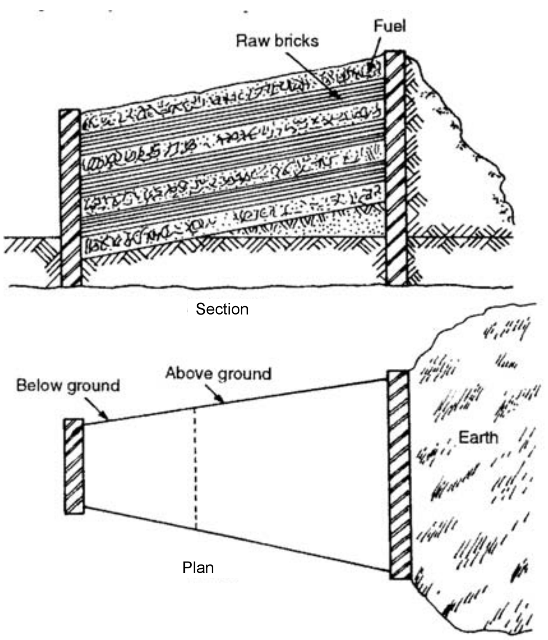

**Fig. 2.9 Clamp or Pazawah**

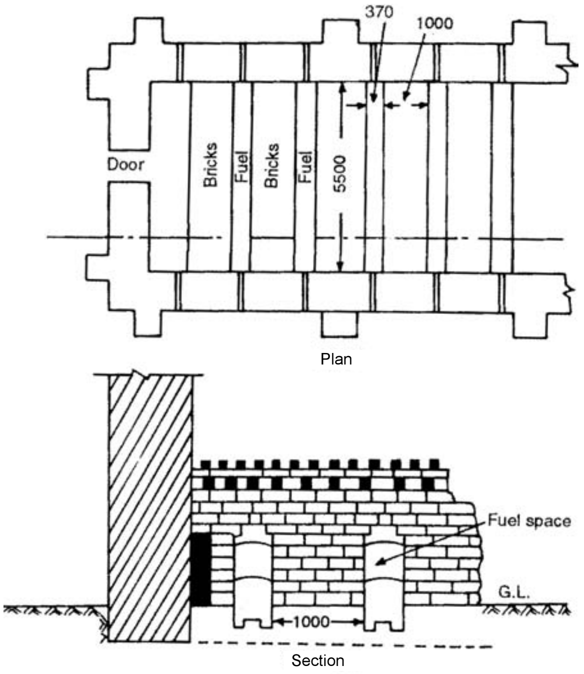

**Fig. 2.10 Intermittent Kiln**

*Continuous Kiln:* The examples of continuous kiln are Hoffman's kiln (Fig. 2.11) and Bull's trench kiln (Fig. 2.12). In a continuous kiln, bricks are stacked in various chambers wherein the bricks undergo different treatments at the same time. When the bricks in one of the chambers is fired, the bricks in the next set of chambers are dried and preheated while bricks in the other set of chambers are loaded and in the last are cooled.

*Note:* **In the areas where black cotton soil occur, a more elaborate method of processing is followed. The clay, which may be black or a mixture of black and yellow, is first washed free of the lime kankar in the 'GHOL' tanks. The slurry is then run off to the setting tanks. After 3–4 days when the clay has settled down, the supernatant water is bucketed off. Opening material like powdered grog of fine coal ash (passing 2.00 mm sieve), which opens up the texture of clay mass, is then added in predetermined proportions. This is usually 30 to 40 per cent of the mass of clay. A solution of 0.5 per cent sodium chloride may also be added at this stage to prevent lime bursting. The clay is then thoroughly mixed with the opening materials added and allowed to dry further for a period of 3–4**

**days till the mix attains the correct moulding consistency. Grog is prepared by lightly calcining lumps of black cotton soil (about 10 to 15 cm dia.) in a clamp at about 700° to 750°C. Coal ash, fire wood, brambles, etc. may be used as fuel. The fuel and clay lumps are arranged in alternate layers in the clamp. After calcination the clay is pulverized in a machine, such as disintegrator, a hammer mill or a pan-mill to a fineness of less than 2.0 mm.**

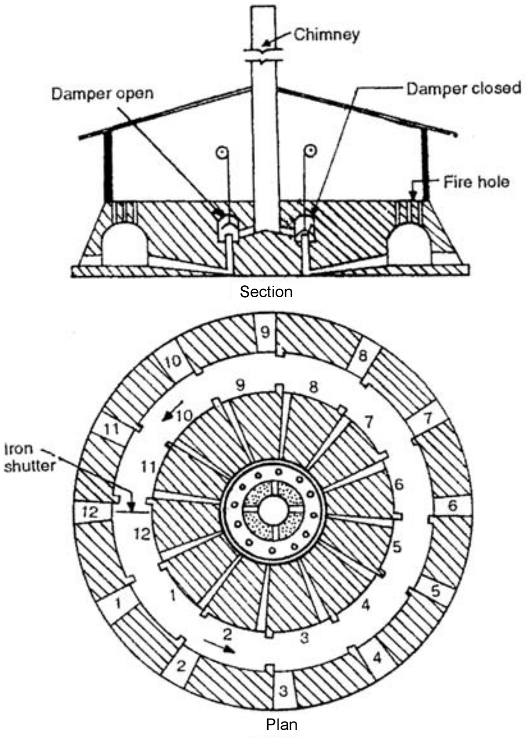

Fig. 2.11 Hoffman's Continuous Kiln

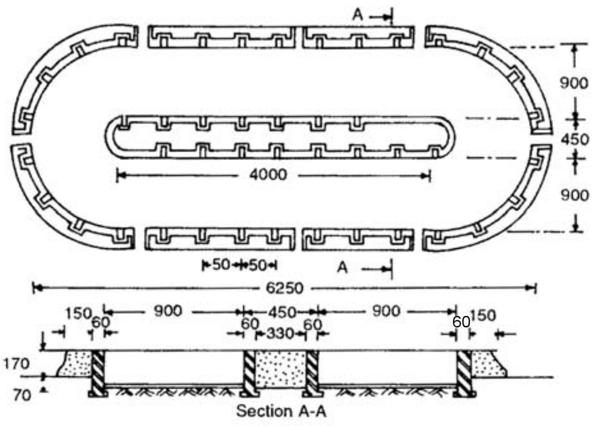

Fig. 2.12 Bull's Trench Kiln

## 2.10 DIFFERENT FORMS OF BRICKS

Some of the common type of bricks, depending upon the places of use, are shown in Fig. 2.13. Round ended and bull nosed bricks (Fig. 2.13 (a, f)) are used to construct open drains. For door and window jambs, cant brick, also called splay brick, shown in Fig. 2.13 (b, c), are most suitable. The double cant brick shown in Fig. 2.13 (c) is used for octagonal pillars. Cornice brick shown in Fig. 2.13 (d) is used from architectural point of view. Figure 2.13 (e) shows a compass brick—tapering in both directions along its length—used to construct furnaces. Perforated brick (Fig. 2.13 (g)) is well burned brick, but is not sound proof. Figure 2.13 (h) shows hollow bricks. These are about 1/3rd the weight of normal bricks and are sound and heat proof, but are not suitable where concentrated loads are expected. Top most bricks course of parapets is made with coping bricks shown in Fig. 2.13 (i). These drain off the water from the parapets. Brick shown in Fig. 2.13 (j) is used at plinth level and for door and window jambs. Split bricks are shown in Fig. 2.13 (k, 1). When the brick is cut along the length, it is called queen closer and when cut at one end by half header and half stretcher, it is known as king closer.

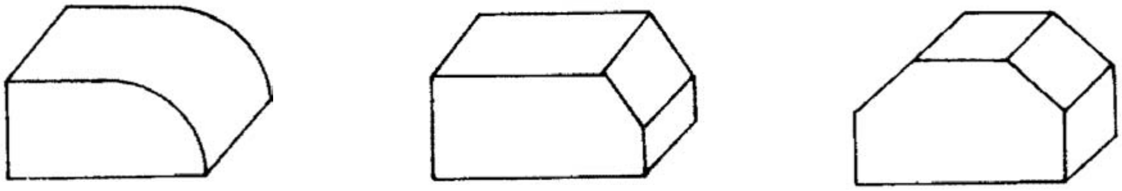

(a) Rounded-ended

(b) Cant

(c) Double cant

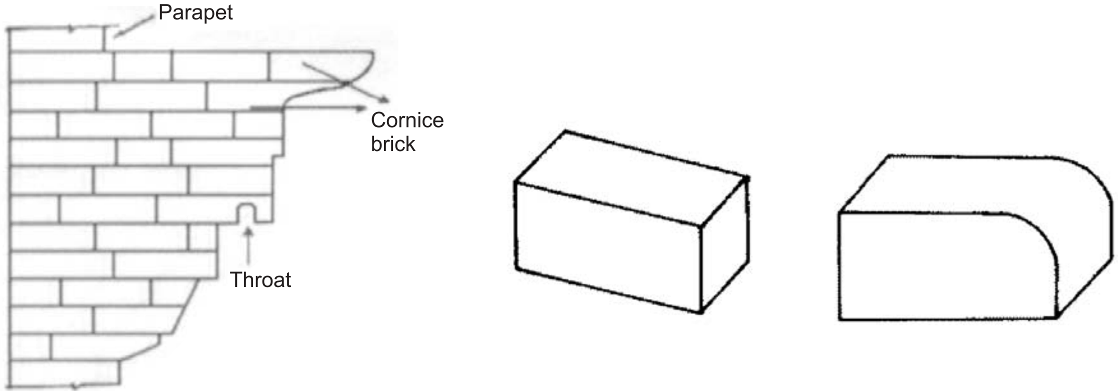

(e) Compass

(f) Bull-nosed

(d) Cornice

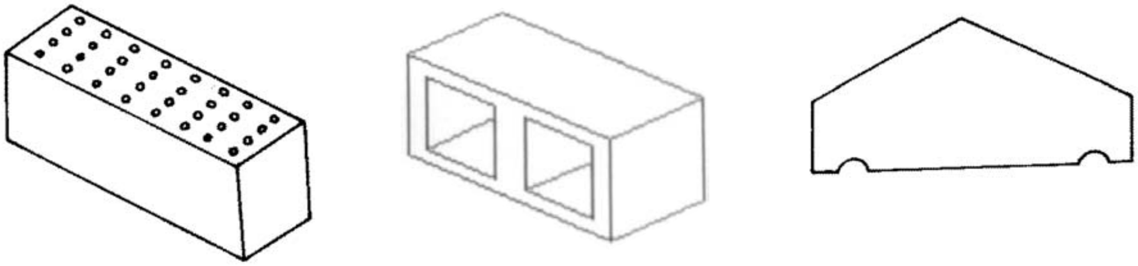

(i) Coping

(g) Perforated

(h) Hollow

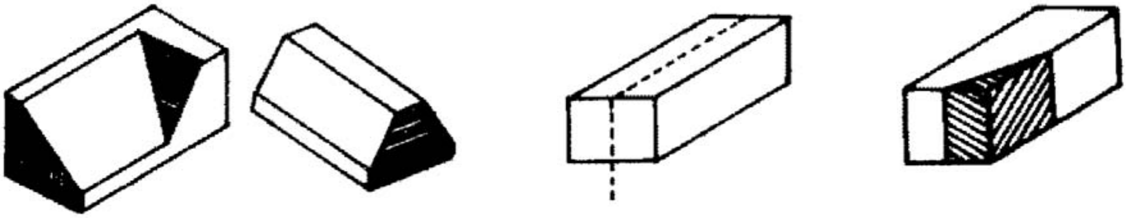

(j)

(k) Queen closer

(l) King closer

**Fig. 2.13 Forms of Bricks**

## 2.11 TESTING OF BRICKS

About fifty pieces of bricks are taken at random from different parts of the stack to perform various tests. For the purpose of sampling, a lot should contain maximum of 50,000 bricks. The number of bricks selected for forming a sample are as per Table 2.3, (IS: 5454). The scale of sampling for physical characteristics is given in Table 2.4.

**Table 2.3. Scale of Sampling and Permissible Number of Defectives for Visual and Dimensional Characteristics**

| No. of bricks in the lot | For characteristics specified for individual brick | | *For dimensional characteristics specified for group of 20 bricks–No. of bricks to be selected* |
|---|---|---|---|
| | No. of bricks to be selected | Permissible No. of defectives in the sample | |
| 2001 to 10000 | 20 | 1 | 40 |
| 10001 to 35000 | 32 | 2 | 60 |
| 35001 to 50000 | 50 | 3 | 80 |

**Note: In case the lot contains 2000 or less bricks, the sampling shall be subject to agreement between the purchaser and supplier.**

**Table 2.4. Scale of Sampling for Physical Characteristics**

| Lot size | Sampling size for compressive strength, breaking load, transverse strength, bulk density, water absorption and efflorescence | Permissible No. of defectives for efflorescence | *Warpage* | |
|---|---|---|---|---|
| | | | *Sample size* | *Permissible No. of defectives* |
| 2001 to 10000 | 5 | 0 | 10 | 0 |
| 10001 to 35000 | 10 | 0 | 20 | 1 |
| 35001 to 50000 | 15 | 1 | 30 | 2 |

***Note:* In case the lot contains 2000 or less bricks, the sampling shall be subject to agreement between the purchaser and supplier.**

***Dimension Test (IS: 1077):*** 20 pieces out of selected pieces (Table 2.3) are taken and are laid flat as shown in Fig. 2.14. The cumulative dimensions of the bricks should be as discussed in Sec. 2.5.

The tolerances (Section 2.5) on the sizes of bricks are fixed by giving maximum and minimum dimensions, not on individual bricks but on batches of 20 bricks chosen at random.

It follows from this method of measurement that batches are likely to contain, bricks outside the prescribed limit of tolerance. Such lots should be rejected to avoid complaints about the variation of perpends.

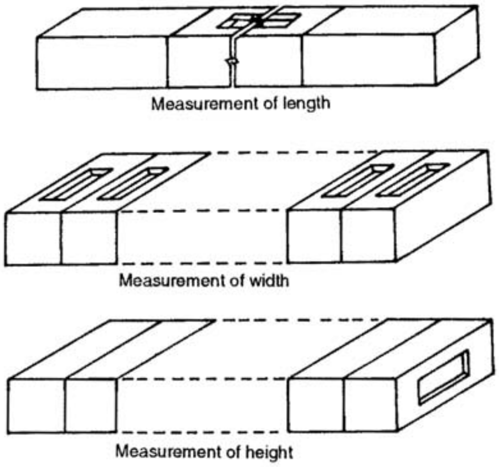

**Fig. 2.14 Measurement of Tolerances of Common Building Bricks**

***Water Absorption Test (IS: 3495 (Part II)):*** The existence of minute pores confers marked capillary properties on brick ceramics. In particular all bricks absorb water by capillary action. The percentage of water absorption is a very valuable indication of the degree of burning. Vitrification, in the true sense, corresponds to such a dgree of compactness that the absorption of the brick is not over 3 per cent after 48 hours of immersion. It has been reported that for absorption less than 5 per cent danger from frost is negligible.

Water absorption does not necessarily indicate the behavior of a brick in weathering. Low absorption (< 7 %) usually indicates a high resistance to damage by freezing, although some type of bricks of much higher absorption may also be frost resistance. Since expansive force of water freezing in the pores of a clay product depends upon the proportion of pore space occupied, the ratio of the absorption after 24 hours submersion to the absorption after boiling for 5 hours ($C_{24}/B_5$) appears to be a better criterion of resistance to freezing than the percentage of absorption.

The durability of a brick may be tested by frost action, i.e., by alternate wetting and drying. The absorption test has long been considered a measure of durability, although the basis for this assumption is questionable. The suction rate of the brick at the time it is laid exercises a mark influence on the mortar bond. Too rapid withdrawal of water from the mortar by the brick produces a weak bond. The rate at which a brick absorbs water, frequently called its suction rate, maybe measured by immersing one face of the brick in water. The one minute water uptake (initial rate of absorprion) is taken as the suction rate. For long periods of immersion in theis test, the total wieght of water absorbed per unit area,

$$w = A\sqrt{t}$$

where, A is the water absorption coefficient
and t is the time elapsed in the test.

The standard methods of finding the absorption value of the bricks are discussed below. If absorption by volume is desired it can be obtained by multiplying the weight percentage by the apparent specific gravity.

*24 Hours Immersion Cold Water Test:* Dry bricks are put in an oven at a temperature of 105° to 115°C till these attain constant mass. The weight ($W_1$) of the bricks is recorded after cooling them to room temperature. The bricks are then immersed in water at a temperature of 27° ± 2°C for 24 hours. The specimens are then taken out of water and wiped with a damp cloth. Three minutes, thereafter it is weighed again and recorded as $W_2$.

$$\text{The water absorption in \%} = \frac{W_2 - W_1}{W_1} \times 100$$

The average water absorption shall not be more than 20 per cent by weight upto class 12.5 and 15 per cent by weight for higher classes.

*Five Hours Boiling Water Test:* The weight of the oven dried bricks ($W_1$) is recorded as above. Then the specimen is immersed in the water and boiled for five hours, followed by cooling down to 27° ± 2°C by natural loss of heat within 16–19 hours. The specimen is taken out of water and wiped with a damp cloth and the weight is recorded as $W_3$.

$$\text{The water absorption in \%} = \frac{W_3 - W_1}{W_1} \times 100$$

***Compressive Strength Test (IS: 3495 (Part I)):*** The crushing affords a basis for comparing the quality of bricks but is of little value in determining the strength of a masonry wall, since the latter depends primarily on the strength of mortar. Six bricks are taken for the compressive strength test althought it may be found that an individual brick varies by 20% or more from the average, the permissible stresses allowed for load bearing walls take account of this, being based on an average strength of six bricks. It is, therefore, both unnecessary and uneconomical to insist that every bricks is above a certain strength. As a criterion of structural strength for brick, the transverse failure in a wall or pavement is likely to occur on account of improper bedment. For testing bricks for compressive strength from a sample the two bed faces of bricks are ground to provide smooth, even and parallel faces. The bricks are then immersed in water at room temperature for 24 hours. These are then taken out of water and surplus water on the surfaces is wiped off with cotton or a moist cloth. The frog of the brick is flushed level with cement mortar and the brick is stored under damp jute bags for 24 hours followed by its immersion in water at room temperature for three days. The specimen is placed in the compression testing machine with flat faces horizontal and mortar filled face being upwards. Load is applied at a uniform rate of 14 $N/m^2$ per minute till failure. The maximum load at failure divided by the average area of bed face gives the compressive strength.

$$\text{Compressive strength } (\text{N}/\text{mm}^2) = \frac{\text{Maximum load at failure (N)}}{\text{Average area of bed faces } (\text{mm}^2)}$$

The average of results shall be reported. The compressive strength of any individual brick tested in the sample should not fall below the minimum average compressive strength specified for the corresponding class of brick by more than 20 percent.

***Warpage Test (IS:3495 (Part IV):*** Warpage of the brick is measured with the help of a flat steel or glass surface and measuring ruler graduated in 0.5 mm divisions or wedge of steel 60 × 15 × 15 mm (Fig. 2.15). For warpage test, the sample consists of 10 bricks from a lot.

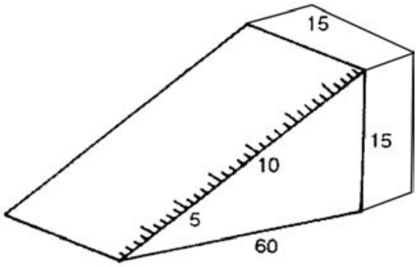

**Fig. 2.15 Measuring Wedge**

*Concave Warpage:* The flat surface of the brick is placed along the surface to be measured selecting the location that gives the greatest deviation from straightness. The greatest distance of brick surface from the edge of straightness is measured by a steel ruler or wedge.

*Convex Warpage:* The brick is place on the plane surface with the convex surface in contact with the flat surface and the distances of four corners of brick are measured from the flat surface. The largest distance is reported as warpage.

The higher of the distance measured in concave and convex warpage tests is reported as warpage.

***Efflorescence Test (IS: 3495 (Part III)):*** The ends of the brick are kept in a 150 mm diameter porcelain or glass dish containing 25 mm depth of water at room temperature (20°–30°C) till the entire water is absorbed or evaporated. The water is again filled to 25 mm depth in the dish and allowed to be absorbed by the brick or evaporated. Presence of efflorescence is classified as below.

1. Nil — When the deposit of efflorescence is imperceptible.
2. Slight — When the deposit of efflorescence does not cover more than 10 per cent of the exposed area of the brick.
3. Moderate — When the deposit of efflorescence is more than 10 per cent but less than 50% of the exposed area of the brick.
4. Heavy — When the deposit of efflorescence is more than 50 per cent but the deposits do not powder or flake away the brick surface.
5. Serious — When the deposits are heavy and powder or flake away the brick surface.

The specifications limit the efflorescence to be not more than moderate (10–50%) up to class 12.5 and not more than slight (< 10 per cent) for higher classes.

## 2.12 DEFECTS OF BRICKS

***Over-burning of Bricks:*** Bricks should be burned at temperatures at which incipient, complete and viscous vitrification occur. However, if the bricks are overburnt, a soft molten mass is produced and the bricks loose their shape. Such bricks are not used for construction works.

***Under-burning of Bricks:*** When bricks are not burnt to cause complete vitrification, the clay is not softened because of insufficient heat and the pores are not closed. This results in higher degree of water absorption and less compressive strength. Such bricks are not recommended for construction works.

***Bloating:*** This defect observed as spongy swollen mass over the surface of burned bricks is caused due to the presence of excess carbonaceous matter and sulphur in brick-clay.

***Black Core:*** When brick-clay contains bituminous matter or carbon and they are not completely removed by oxidation, the brick results in black core mainly because of improper burning.

***Efflorescence:*** This defect is caused because of alkalies present in bricks. When bricks come in contact with moisture, water is absorbed and the alkalis crystalise. On drying grey or white powder patches appear on the brick surface. This can be minimised by selecting proper clay materials for brick manufacturing, preventing moisture to come in contact with the masonry, by providing waterproof coping and by using water repellent materials in mortar and by providing damp proof course.

***Chuffs:*** The deformation of the shape of bricks caused by the rain water falling on hot bricks is known as chuffs.

***Checks or Cracks:*** This defect may be because of lumps of lime or excess of water. In case of the former, when bricks come in contact with water, the absorbed water reacts with lime nodules causing expansion and a consequent disintegration of bricks, whereas shrinkage and burning cracks result when excess of water is added during brick manufacturing.

***Spots:*** Iron sulphide, if present in the brick clay, results in dark surface spots on the brick surfaces. Such bricks though not harmful are unsuitable for exposed masonry work.

***Blisters:*** Broken blisters are generally caused on the surface of sewer pipes and drain tiles due to air imprisoned during their moulding.

***Laminations:*** These are caused by the entrapped air in the voids of clay. Laminations produce thin lamina on the brick faces which weather out on exposure. Such bricks are weak in structure.

## 2.13 HEAVY DUTY BURNT CLAY BRICKS (IS: 2180)

These are similar to burnt clay bricks and of the same size but with high compressive strength.

### Classification

Class 400: compressive strength not less than 40.0 $N/mm^2$ but less than 45.0 $N/mm^2$.

Class 450: compressive strength not less than 45.0 $N/mm^2$.

These are further subdivided as subclasses A and B based on tolerance.

***Tolerance***

| Dimensions (cm) | Tolerances (mm) | |
|---|---|---|
| | Subclass A | Subclass B |
| 9 | ± 3 | ± 7 |
| 19 | ± 6 | ± 15 |

***Water absorption:*** should not be more than 10 per cent after 24 hours immersion in water.

***Efflorescence:*** should be nil.

***Bulk density:*** should be less than 2500 $kg/m^3$.

## 2.14 BURNT CLAY PERFORATED BRICKS (IS : 2222)

Perforated Bricks contain cylindrical holes throughout thier thickness, have high compressive strength and less water absorption. These bricks are light in weight, require less quantity of clay and drying and burning of these bricks is easy and economical. The direction of perforations can be vertical or horizontal. These are used in building walls and partitions. The area of perforations should not exceed 30 to 45% of the area of face. In case of rectangular perforations, larger dimensions should be parallel to longer side of the brick.

***Dimensions***

These are available in the following sizes.

(i) 19 × 9 × 9 cm.

(ii) 29 × 9 × 9 cm.

***Tolerance***

| Dimensions (cm) | Tolerances (mm) |
|---|---|
| 9 | ± 4 |
| 19 | ± 7 |
| 29 | ± 10 |

***Perforations***

(i) Dimension of perforation parallel to short side should not be more than 20 mm in case of rectangular projection and 25 mm in case of circular projection.
(ii) Area of each perforation should not exceed 500 $mm^2$.

***Compressive strength*** should not be less than 7.0 $N/mm^2$.

***Water absorption*** should not be more than 15 per cent.

***Efflorescence*** should not be more than slight.

***Warpage*** should not exceed 3 per cent.

## 2.15 BURNT CLAY PAVING BRICKS (IS : 3583)

The iron content is more than that in the ordinary clay bricks. Excessive iron causes vitrification of bricks while burning at a low temperature, gives natural glaze to the brick, making it more resistant to abrasion. Paving bricks can be manufactured from surface clays, impure fire-clays or shale. However, shales are the best raw material for paving bricks. These are generally burned in continuous kiln for seven to ten days.

***Dimensions:*** The available sizes are:
(i) 19.5 × 9.5 x 9 cm
(ii) 19.5 × 9.5 × 4 cm

***Tolerances***

| Dimensions (cm) | Tolerances (mm) |
|---|---|
| 19.5 | ± 6 |
| 9.5 | ± 3 |
| 9 | ± 3 |
| 4 | ± 1.5 |

***Compressive strength*** should not be less than 40.0 $N/mm^2$.

***Water absorption*** should not be more than 5 per cent by weight after immersion for about 24 hours.

## 2.16 BURNT CLAY SOLING BRICKS (IS : 5779)

These are used for soling of roads.

***Dimensions***

(i) 19 × 9 × 9 cm
(ii) 19 × 9 × 4 cm

***Tolerances:*** Overall dimensions of 20 bricks (selected) should be within following limits.

| | |
|---|---|
| Length | 370–388 cm (380 ± 8 cm) |
| Width | 176–184 cm (18 ± 4 cm) |
| Height | |

| For | | |
|---|---|---|
| | 9 cm bricks | 176–184 cm |
| | 4 cm bricks | 76–84 cm |

***Compressive strength*** should not be less than 5.0 N / mm$^2$.

***Water Absorption*** should not be more than 20 per cent by weight after immersion for about 24 hours in cold water.

***Efflorescence:*** Rating should not be more than slight.

## 2.17 BURNT CLAY HOLLOW BLOCKS (IS : 3952)

Hollow blocks, also known as cellular or cavity blocks, are manufactured from a thoroughly ground, lump free, well mixed clay mass of medium plasticity to allow moulding. The process of manufacture is similar to that of stiff-mud bricks. These are used to reduce the dead weight of the masonry and for exterior as well as partition walls. They also reduce the transmission of heat, sound and dampness.

### *Types*

Type A — Blocks with both faces keyed for plastering or rendering.

Type B — Blocks with both faces smooth for use without plastering or rendering on either side.

Type C — Blocks with one face keyed and one face smooth.

### *Dimensions*

| Length (cm) | Breadth (cm) | Height (cm) |
|---|---|---|
| 19 | 19 | 9 |
| 29 | 9 | 9 |
| 29 | 14 | 9 |

### *Tolerances*

| Dimensions (cm) | 9 | 14 | 19 | 29 |
|---|---|---|---|---|
| Tolerances (mm) | ± 4 | ± 5 | ± 7 | ± 10 |

***Crushing Strength:*** Minimum average value should be 3.5 N / mm$^2$. Strength of individual block should not fall below the average value by more than 20 per cent.

***Water absorption*** should not be more than 20 per cent.

## 2.18 BURNT CLAY JALLIS (IS: 7556)

These are normally used for providing a screen on verandah and construction of parapet or boundary walls. Total void area should not exceed 40 per cent. Keys for bonding with mortar should be 10 mm wide and 3 mm deep. These are generally hand moulded but superior qualities can be produced by machines.

***Dimensions***

19 × 19 × 10 cm, 19 × 19 × 5 cm, 19 × 14 × 10 cm, 19 × 14 × 5 cm,
14 × 14 × 10 cm, 14 × 14 × 5 cm, 14 × 9 × 5 cm, 9 × 9 × 5 cm.

***Tolerances*** ± 3 per cent.

***Breaking load*** average value should not be less than 1.2 $N/mm^2$ width.

***Water absorption*** average value should not exceed 15 per cent.

***Efflorescence*** rating should not be more than slight.

***Warpage*** should not exceed 3 per cent.

## 2.19 CLAY TILES

Tiles are thin slabs of low melting clays used for various purposes in engineering constructions. These give a very pleasing appearance and good service properties. Roofing tiles, flooring tiles, wall tiles and partition tiles are some of the examples. Due to the considerable mass, labour-consuming manufacture, erection and drainage problems, and appreciable transportation charges, roofing tiles have lost their importance and are recommended locally. The various types of roofing tiles in common use are shown in Fig. 2.16. Floor tiles are extensively used in houses and industrial buildings. These are durable and impervious to water, resist abrasion well and wash easily. White burning and red burning clays, fire clays and shales are used in making tiles for floor surfaces. Tiles for surface of walls differ from floor tiles principally in design in degree of burning. Wall tiles are burned at a comparatively low temperature, glazed, and fired again in muffle kiln at a still lower temperature.

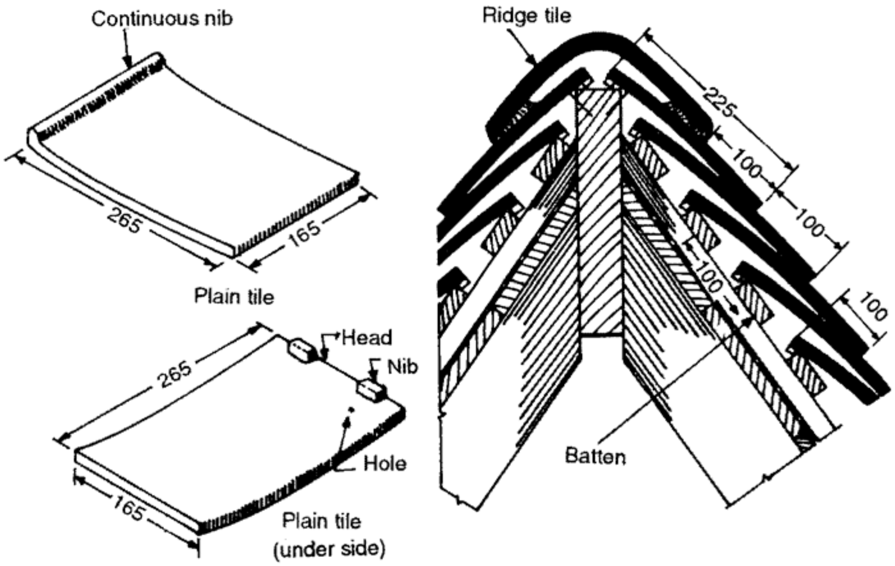

Fig 2.16 (a) Plain Tiling

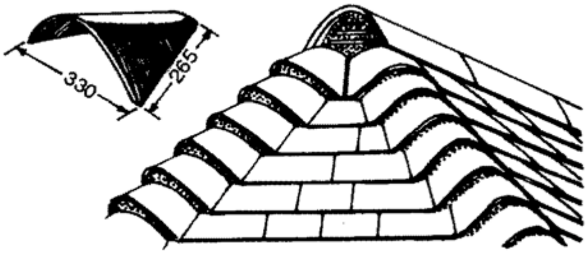

Fig. 2.16 (b) Hip Tiling

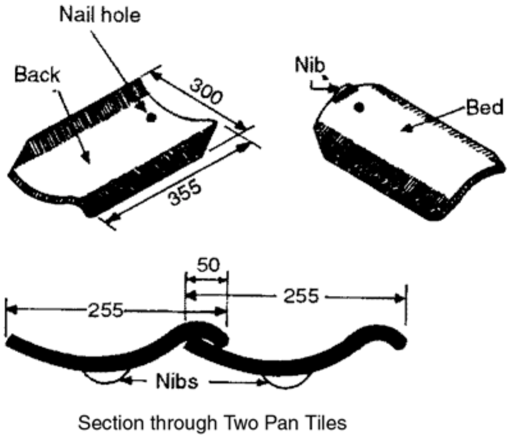

Fig. 2.16 (c) Pan Tiles

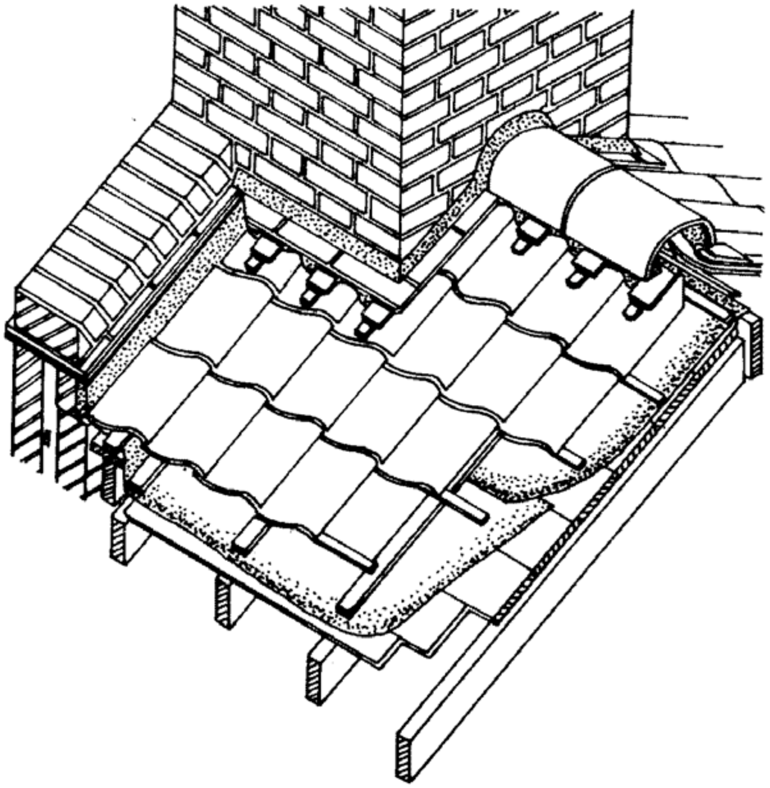

Fig. 2.16 (d) Pan Tiling

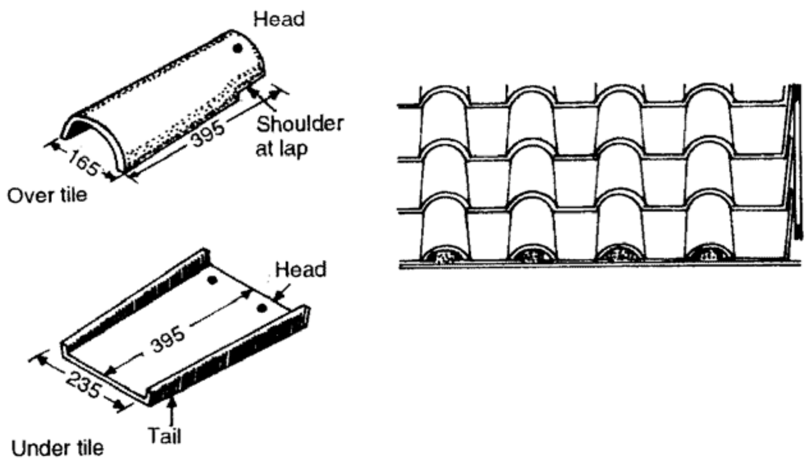

Fig. 2.16 (e) Spanish Tiling

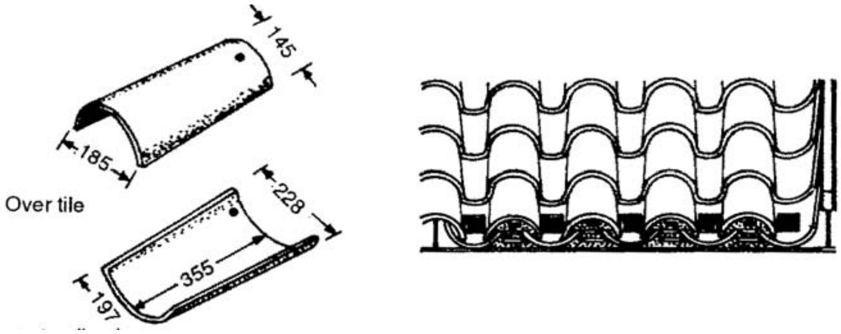

Fig. 2.16 (f) Italian Tiling

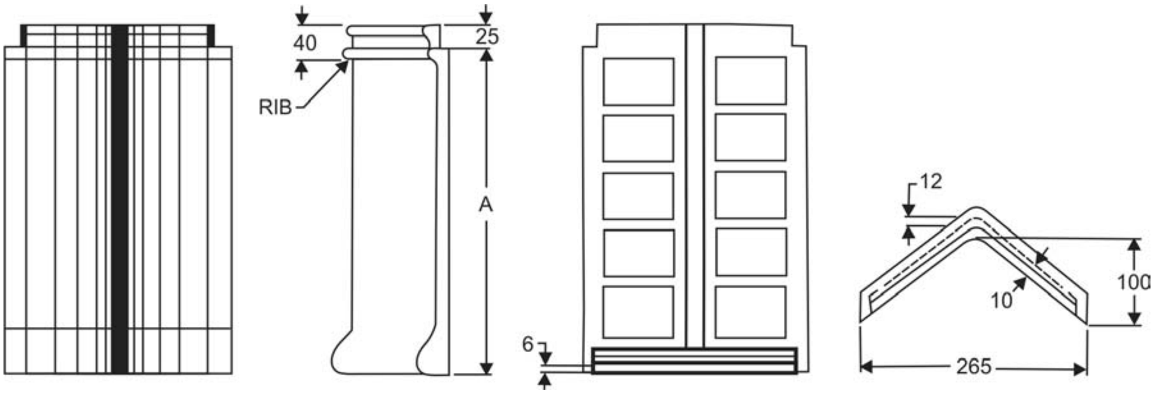

Fig. 2.17 (a) Ridge Tile

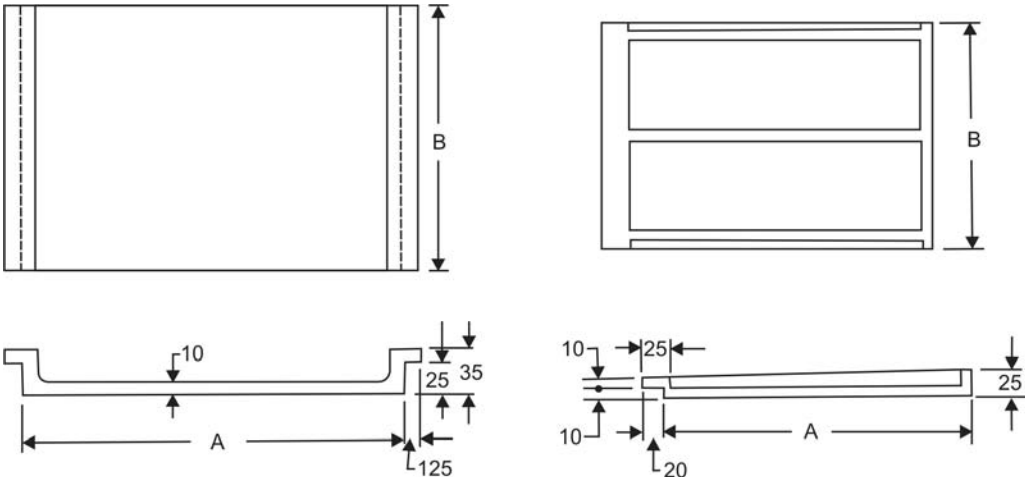

**Double Lug Type**
**(Length of ceiling tile at the bottom)**

**Single Lug Type**
**(Width of ceiling tile at the bottom)**

**Fig. 2.17 (b) Ceiling Tile**

## Manufacturing

Tiles are made in the same manner as bricks, but are thinner and lighter, so require greater care. These are manufactured from a clay mass with or without admixtures of colouring impurities by moulding and subsequent burning until baked, up to about 1300 °C. The clay should be highly plastic with lean admixtures and fusing agents to lower the melting point. These are moulded in machines of the auger or plunger type and are commonly burned in continues kilns.

## Specifications

***Flat Terracing Tiles*** *(IS: 2690):* The flat terracing tiles may be hand moulded or machine moulded. Their specifications are given in Table 2.5. Hand moulded tile is marked with symbol H and the machine moulded tile with symbol M.

**Table 2.5 Specifications for Flat Terracing Tiles**

| *Characteristic/Dimensions* | *Hand moulded* | *Machine moulded* |
|---|---|---|
| Length (mm) | 250 to 150 in stages of 25 | 250 to 150 in stages of 25 |
| Width (mm) | 200 to 75 in stages of 25 | 200 to 100 in stages of 25 |
| Thickness (mm) | 25 to 50 in stages of 5 | 20 and 15 |
| Tolerances | ± 3% | ± 2% for machine pressed<br>± 3% for machine extrudel |
| Warpage | ≯ 2 %of deminsion | ≯ 1% of diminsion |
| Water absorption | ≯ 20 % | ≯ 15% |
| Modulus of rupture (N/mm2) | ≯ 1.5 | ≯ 2 |

## Clay Ridge and Ceiling Tiles

The clay ridge and ceiling tiles (Fig. 2.17) are grouped as class AA and also A and should fulfil the following requirements.

| | Class AA | Class A |
|---|---|---|
| 1. Maximum water absorption (%) | 18 | 20 |
| 2. Minimum breaking strength (kN) | 0.015 (average)<br>0.0125 (individual) | 0.011 (average)<br>0.0095 (individual) |

The length of the ridge tile measured from face to face excluding the portion containing the catch should be 375, 400 and 435 mm with a tolerance of 15 mm. When a ridge tiles is placed on a horizontal plane (Fig. 2.17 (a)), the triangle formed in elevation by producing the inner faces of the tile should have a base of 265 mm and height of 100 mm with a tolerance of ± 5 mm. The tiles shold be not less than 100 mm thick throughout.

The ceiling tiles may be of single lug or double lug type as shown in Fig. 2.17(b).

### ***Flooring Tiles***

The flooring tiles are of three classes–class 1, class 2 and class 3. These are available in following sizes.

150 × 150 × 15mm, 150 × 150 × 20mm, 200 × 200 × 20mm
200 × 200 × 25mm, 250 × 250 × 30mm

The average dimensions should not vary by more than ± 5 mm and that for a given area and space the dimensions of individual tile should not vary by more than ± 2 %. For thickness these limits are ± 2 mm and ± 1 mm respectively.

The characteristics of these tiles are given in Table 2.6.

**Table 2.6 Classification of Flooring Tiles**

| *Sl. No.* | *Characteristic* | *Requirements for* | | |
|---|---|---|---|---|
| | | *Class 1* | *Class 2* | *Class 3* |
| (i) | Water absorption per cent, ***Max:*** | 10 | 19 | 24 |
| (ii) | Flexural strength, kg/cm width, ***Min:*** | | | |
| | (a) Average | 6 | 3.5 | 2.5 |
| | (b) Individual | 5 | 3.0 | 2.0 |
| (iii) | Impact, maximum height in mm of drop of steel ball: | | | |
| | (a) 15 mm thick | 25 | 20 | 15 |
| | (b) 20 mm thick | 60 | 50 | 40 |
| | (c) 25 mm thick | 75 | 65 | 50 |
| | (d) 30 mm thick | 80 | 70 | 60 |

## Characteristics

A good roofing tile should have the following properties:

1. uniform texture.
2. accurate size and shape.
3. free from defects like flaws, cracks and nonuniform burning.

4. water absorption (less than 15 per cent).
5. resistant to atmosphere and dampness.
6. durability.

## Uses

They are used as roofing material for low cost houses in big cities and also used to give a pleasing look from architectural point of view.

## Testing of Tiles

The burnt, clay roofing tiles must comply with two tests—the transverse strength test and the water absorption test. The flooring tiles in addition to these tests must also be tested for impact. Ridge tiles are tested for water absorption and breaking strength.

*Transverse Strength Test (IS: 2690)* consists of applying the load along the centre line at right angles to the length of the tile (which has been immersed in water for twenty four hours) supported on the rounded edges of wood bearers. Six tiles are tested and the average breaking load should not be less than as specified in the code. The rate of loading is kept uniform and may vary in the range of 450-550 N / min.

$$\text{Flexural strength } (\text{N/mm}^2) = \frac{15\ \text{WS}}{\text{bt}^2}$$

where W = breaking load, S = span in mm (3/4 of tile), and b, t = width and thickness, respectively.

*Water Absorption Test (IS: 2690):* Six tiles are dried in oven at 105 ± 5°C and cooled at the room temperature. They are then immersed in water for twenty four hours. Thereafter wiped dry and weighed.

$$\text{Absorption in \%} = \frac{W_2 - W_1}{W_1} \times 100$$

where, $W_1$ and $W_2$ are the respective weights of dry and the immersed specimens.

*Impact Test (IS: 1478):* The apparatus for the impact test consists of an upright stand fixed to a heavy base. A steel ball 35 mm in diameter and 170 g in weight is held in jaws of a clamp fixed to the stand. Three specimen tiles are oven dried at a temperature of 100–110°C till they attain a constant weight and then allowed to cool at room temperature. The tile is placed horizontally with its face upwards over a 25 mm thick rubber sheet which in turn is placed over a rigid horizontal surface. The tile is so adjusted that the ball when released falls vertically on the centre of the tile. The steel ball is first released from a height of 75 mm. Then the height of release is raised in steps of 75 mm until the test specimen fractures. The maximum height of release of the test ball is reported.

*Breaking Strength Test (IS: 1464):* A sample of six tiles is used for the test. The tiles are soaked in water for 24 hours. The two longitudinal edges of the ridge tiles are kept, in the normal position, over two strips of 25 mm thick rubber sheet placed on the table of the testing machine. A 75 × 100 × 300 mm block is placed over the ridge of the tile and a load of 2.7 kN / min is applied on the block. The breaking load of individual tile is noted. It is divided by the length of tile. The results are reported in N / mm.

## 2.20 FIRE-CLAY OR REFRACTORY CLAY

Fire-clay is a term, loosely applied, to include those sedimentary or residual clays which vitrify at a very high temperature and which, when so burnt, possess great resistance to heat.

These are pure hydrated silicates of alumina and contain a large proportion of silica 55–75%, alumina 20–35%, iron oxide 2–5% with about 1 per cent of lime, magnesia and alkalis. The greater the percentage of alumina, the more refractory the clay will be. Fire clays are capable of resisting very high temperatures up to 1700°C without melting or softening and resist spalling. The presence of a small percentage of lime and magnesia and alkalis help to melt the clay particles more firmly, whereas a large percentage of lime and magnesia tend to melt the clay at low temperatures. Iron oxide or other alkalis reduce refractory qualities of fire clay. The fire clay is used for manufacturing fire bricks used in furnance linings, hollow tiles, and crucibles.

## 2.21 FIRE-CLAY BRICKS OR REFRACTORY BRICKS

Fire-clay bricks are made from fire-clay. The process of manufacturing is as of an ordinary brick, burnt at very high temperatures in special kilns (Hoffman's kiln). The raw materials used for the manufacture of fire bricks consist of flint clay and grog (burnt fire clay) as non-plastic materials and soft fire clay as plastic material. Fire clay mortar is used to clay rerfractory bricks.

### Properties

1. The colour is whitish yellow or light brown.
2. The water absorption of fire-clay bricks varies from 4–10%
3. The minimum average compressive strength of the bricks should be 3.5 N / mm$^2$.

***Uses*** These are used for lining blast furnances, ovens, kilns, boilers and chimneys.

The principal varieties of fire-clay bricks are as follows:

*Acid Refractory Bricks* consist of silica bricks (95–97% silica and 1–2% lime) and ganister bricks (ganister—a hard coloured sand stone containing 10 per cent clay and 2 per cent of lime), used in lining furnaces having siliceous and acidic slag, steel industry and coke oven. The softening temperature ranges from 1700° to 1800°C. Silica bricks are hard and also possess good refractoriness under load. But they have tendency to spall during rapid temperature change therefore, these can not be used for lining of furnaces which have to be cooled and reheated frequently.

*Basic Refractory Bricks* consist of magnesia bricks (magnesia minimum 85 per cent, calcium oxide maximum 25 per cent and silica maximum 5.5 per cent) and bauxite bricks (minimum 85 per cent aluminium oxide and maximum 20 per cent clay). These are highly resistant to corrosion and are used for lining furnances having basic slag. Due to high thermal expansion and consequent poor resistance to spalling the use of these bricks is retricted to copper metallurgy and basic open hearth.

*Neutral Refractory Bricks* consist of chromite bricks (50 per cent chrome and iron ore containing 30 per cent iron oxide and bauxite containing 15 per cent aluminium and 5 per cent silica), chrome magnesite bricks ($Cr_2O_3$ 18 per cent, MgO 30 per cent), spinel and forsterite bricks. The neutral refractory bricks are suitable at places where acidic and basic linings are to be separated, e.g. for lining copper reverberatory furnance.

## 2.22 TERRACOTTA

It is an Italian word, *Terra* means clay and *Cotta* means burnt. Terracotta is refractory clay product and is used in ornamental parts of buildings. The clay used for its manufacture should be of superior quality and should have sufficient iron and alkaline matters. By varying iron oxide in clay, desired colour can be obtained. The clay is mixed with powdered glasses, pottery and sand ground to fine powder and pugged several times till it gets uniform and soft for moulding. Terracotta is impervious, hard and cheap. When properly made the material weathers well and becuse of its glazed surface can be cleaned easily. The product is burnt in special kilns (Muffle furnance).

***Preparation of Clay:*** The clay is mixed thoroughly with water in a tub. Powdered pottery, glass and white sand are added to it in sufficient proportions. It is then intimately mixed with spades. The intimate mix is then placed in wooden boxes with joints. This allows the surplus water to drain off. Thereafter the mix is passed several times through pug mills.

***Moulding and Drying:*** Special porous moulds are made of Plaster of Paris or of zinc. The pugged clay is pressed into moulds. The dried articles are taken out of the moulds after a few days and then dried slowly.

***Burning:*** Terracotta is burned with care to get uniform colour in muffle furnance between 1100–1200°C.

### *Composition*

Dry clay 50–60%
Crushed pottery 20%
Ground glass 8–10%
Clean white sand 10–20%

### *Uses*

1. Hollow blocks of terracotta are used for masonry.
2. Cornices and arches.
3. Statuettes.
4. Ornamental works.
5. Being fire proof, terracotta is most suitable as casing for steel columns and beams.
6. Porous terracotta is used for sound insulation.

***Classification:*** Terracotta is of two types, the porous and the polished (Faience).

*Porous Terracotta:* It is manufactured by mixing sawdust or finely fragmented cork in the clay and has the following characteristics.

1. Light weight.
2. Resistant to weathering action.
3. Fire resistant.

4. Can be nailed and sawn to various shapes.
5. Sound proof.
6. Poor strength—used only for ornamental works.

*Polished Terracotta* is highly glazed architectural terracotta with relatively coarse body. These are made from refractory clays with addition of quartz sand and fusing agents such as chalk.The polished terracotta is also called *terracotta twice burnt*. The 1st burning is called *biscutting* and is done at 650°C. Then, this product is coaled with glazed solution which imparts texture and colour. Thereafter it is dried and fired at 1200°C. The material

1. is hard, strong and durable.
2. can be given different colours.
3. is leak proof (water absorption < 12 per cent) and can be easily cleaned.
4. is resistant to chemical action.
5. is resistant to weathering action of atmosphere.
6. is fire proof.

## 2.23 PORCELAIN

A high grade ceramic ware having white colour, zero water absorption and glazed surface which can be soft or hard, consists of finely dispersed clay, kaolin, quartz and felspar, baked at high temperature and covered with a coloured or transparent glaze. The glazing material is applied before firing. At high temperatures, the felspar particles fuse and bind the other constituents into a hard, dense, and vitreous mass. High temperature ensures non-porosity and a better product. Because of white colour, it is also called *whiteware* which is of two types:

***Soft Porcelain*** is made from white clay to which flint is added.

***Hard Porcelain*** is made form china clay or kaolin with quartz and felspar are added as filler.

### *Composition*

| | |
|---|---|
| China clay | 50–60% |
| Ordinary clay | 5% |
| Whiting | < 1% |
| Felspar | 20% |

### *Characteristics*

1. Low (zero) water absorption.
2. Hard and glazed.
3. Good refractory material.
4. Good electric insulator.

*Uses:* Porcelain is used for manufacturing sanitary wares, containers and crucibles, reactor chambers and electric insulators.

***Note:*** **A special type of porcelain known as Ziron Porcelain is used in automobile industry. Its composition is as follows:**

| | |
|---|---|
| **Iron** | **60%** |
| **Clay** | **15–30%** |

## 2.24 STONEWARE

A hard ceramic material resembling porcelain with a different colour, usually grey or brownish is made from refractory clay mixed with crushed pottery, stones and sand burned at high temperatures and cooled slowly. The clay used for making stoneware consists of about 75 per cent silica and 25 per cent alumina. Iron oxide is added to give colour.

*Characteristics*

1. Hard, compact, strong and durable material.
2. Gives ringing sound when struck.
3. Glazed stoneware becomes resistant to chemical and weathering action.
4. Gives good finish and appearance.

*Uses*

1. Light sanitary wares, e.g. wash basins, water closets, etc.
2. Drain pipes and fittings.
3. Road paving materials.
4. Flooring tiles and wall tiles in toilets and kitchens.

## 2.25 EARTHENWARE

These are made by burning the ordinary clay at low temperature and cooling slowly. To check shrinkage, sand and crushed pottery are mixed with clay. This also increases the toughness, hardness and strength of the ware.

*Characteristics*

1. Soft, porous and weak.
2. Glazed earthenware becomes resistant to weathering action.

*Uses:* Earthenware is used for manufacturing drain pipes, lavatory fittings and light weight partition walls.

## 2.26 MAJOLICA

It is Italian earthenware coated with an opaque white enamel, ornamented with metallic colour. It is manufactured from low-heat clays to which up to 20 per cent calcium carbonate is added in the form of chalk. Majolica has a microporous texture.

*Uses:* It is used in doorways, window casings, and facing tiles.

## 2.27 GLAZING

Bricks, tiles, earthenwares and stonewares are glazed by an impervious film to protect the surface from chemical attack and other weathering agencies. The different types of glazing in use are as to follow.

### Transparent Glazing

There are many methods for imparting transparent glazing, but salt glazing is most commonly used, since this makes the items impermeable. It consists of throwing sodium chloride in the kiln when burning is at peak (1200°–1300°C). The heat of the kiln volatises the salt, which enters into the pores of the burning item and combines with the silica in clay to make soda silicate. The soda silicate so formed combines with alumina, lime and iron in the clay to form a permanent thin, transparent surface coating.

### Lead Glazing

Clay items are burned thoroughly and then dipped in a solution of lead oxide and tin oxide. The particles of lead and tin adhere to the surface of clay items. After this, the articles are returned in potter's kiln where these adhered particles melt and form a thin transparent layer on the outer surface. This method of glazing is used for items of inferior clay which cannot withstand high temperature required for salt glazing.

### Opaque Glazing

This is also known as *enamelling.* Borax, kaolin, chalk and colouring matter is fired with total or a part of felspar, flint, and lead oxide. The resulting molten glass is poured into water to give shattered frit. The frit is then ground with remaining materials and water and is made of the consistency of cream known as *slip.* Fully burnt earthenwares known as *biscuits* are dipped in the slip. The biscuits absorb water and form thin layer of glaze on the surfaces. After drying the products, these are once again fired to a lower temperature so as to fuse the glaze.

## 2.28 APPLICATION OF CLAY PRODUCTS

Universal availability of raw materials, comparative simplicity of manufacture and excellent durability of ceramic materials have put them in the forefront among other constructional materials. The high strength and durability of clay products underlie their wide use in the various elements of buildings, such as walls, wall and floor facing materials, lining materials for chemical industry apparatus, chimney, light porous aggregates for roofing, and sewer pipes. The various applications of clay products in the building industry are as follows.

1. *Wall materials.* The examples are common clay brick, perforated clay brick, porous and perforated stiff-mud brick, hollow clay dry-press brick. Perforated plastic moulded ceramic stones and light weight building brick. Clay brick accounts for half of the total output of wall materials. Structural properties of hollow clay products and low heat losses through air-filled voids (particularly at subzero temperatures) provide great possibilities for reducing the thickness and the weight of exterior walls. Ceramic facing tiles remain the chief finishing material for sanitary and many other purposes and are still in great use for external facing of buildings.
2. *Brick for special purposes.* The example are curved clay brick, stones for sewage installations (underground sewer pipes) brick for road surface (clinker).
3. *Hollow clay products for floors.* The examples are stones for close-ribbed floors (prefabricated or monolithic), stones for reinforced ceramic beams, sub flooring stones (fillers between beams).
4. *Facade decoration.* The examples are glazed or non-glazed varieties subdivided in to facing brick and ceramic stones, floor ceramics, small-size ceramic tiles, ceramic plates for facades and window-sill drip stones.

5. *Clay products for interior decoration.* The examples are tiles for facing walls, built-in parts, large floor tiles and mosaic floor tiles.
6. *Roof materials.* The examples are common clay roof tiles for covering slopes of roofs, ridge tiles for covering ridges and ribs, valley tiles for covering valleys, end tiles ("halves" and "jambs") for closing row of tiles, special tiles.
7. *Acid-resistant lining items.* The examples are common acid-resistant brick, acid-resistant and heat-and-acid-resistant ceramic shaped tiles for special purposes, ceramic acid-resistant pipes and companion shapes.
8. *Sanitary clay items.* Sanitary ware items are manufactured mainly form white-burning refractory clay, kaolins, quartz and feldspar. There are three groups of sanitary ceramics: faience, semi-porcelain and porcelain, which differ in degree of caking and, as a consequence, in porosity. Items from faience have a porous shell, and items from porcelain, a solid shell, while those from semi-porcelain are of intermediate densities. The various degrees of caking of faience, porcelain and semi-porcelain, made of the same raw materials, are due to the latter's different proportions in the working mass.

   Solid faience is used mainly to manufacture toilet bowls, wash basins, toilet tanks and bath tubs. Items are glazed, since unglazed faience is water permeable. Semi-porcelain items feature excellent hygienic and mechanical properties being intermediate between those of faience and porcelain. Porcelain outer shell is impervious to water and gases and possesses high mechanical strength and resistance to heat and chemical agent. Porcelain is used to manufacture insulators for power transmission lines, chemical laboratory vessels, etc.
9. *Aggregate for concrete.* Creamiste (manufactured from low-heat clay), a light weight porous material forms excellent aggregate for light weight concrete.

## EXERCISES

1. (a) What are the requirements of soil suitable for burning bricks?
   (b) How can good bricks be made from black cotton soil?
   (c) What are the substances which harm the qualities of good bricks, in their manufacture and as finished product.
2. (a) Enumerate the chief characteristics of clay as material used for manufacture of bricks. Describe its behaviour under varying climatic conditions.
   (b) Describe the qualities of first class building bricks and indicate how are they influenced by the
      (1) nature of clay used
      (2) process of manufacture
      (3) manner of firing
3. (a) What are the properties of first class bricks?
   (b) Describe how bricks are classified?
   (c) What are the constituents of good brick-earth?
4. (a) Describe the common defects in bricks.
   (b) What are the factors to be considered while selecting a site for the manufacture of bricks?

5. (a) What constituents render brick-earth unsuitable for manufacturing bricks?
   (b) How does excess of each of the constituents of brick-earth affect the quality of bricks?
6. Differentiate between
   (a) Perforated and hollow bricks.
   (b) Acid refractory and basic refractory bricks.
   (c) Over-burnt and under-burnt bricks.
   (d) Earthenware and stoneware.
   (e) Slop-moulded and sand-moulded bricks.
7. (a) Describe the tests performed to check the quality of bricks.
   (b) What do you understand by glazing ? How is it done?
8. Write short notes on:
   (a) Clay Jallis
   (b) Defects in bricks
   (c) Clamp burning of bricks
   (d) Glazing
   (e) Efflorescence
   (f) Heavy duty bricks
9. (a) What is a frog? State its importance in clay bricks.
   (b) What are the characteristics of good bricks?
10. Describe briefly the tests to which bricks may be put before using them for engineering purposes.
11. What is efflorescence in bricks? What are its causes and remedies?
12. (a) What are fire clays? State there constituents and importance.
    (b) Describe the process of manufacturing clay tiles.
13. Write short notes on:
    (a) Refractory bricks
    (b) Earthenware
    (c) Majolica
    (d) Over-burnt bricks.
    (e) Ceiling tiles
    (f) Testing of tiles
14. Sketch and state the uses of:
    (a) Coping brick
    (b) Bull nose brick
    (c) Perforated brick
    (d) Cornice brick
    (e) Hollow brick
    (f) Queen closer
15. Write short notes on:
    (a) Paving bricks
    (b) Roofing tiles
    (c) Terracotta
    (d) Faience
    (e) Porcelain
    (f) Warpage test of bricks
    (g) Majolica
    (h) Testing of tiles

## OBJECTIVE TYPE QUESTIONS

1. Consider the following statements:
   A good soil for making bricks should contain
   (1) about 30% alumina
   (2) about 10% lime nodules
   (3) a small quantity of iron oxides
   (4) about 15% magnesia
   Of these statements
   (a) 1 and 2 are correct
   (b) 1 and 3 are corect
   (c) 1, 3 and 4 are correct
   (d) 2, 3 and 4 are correct

2. If L is the length and B the width of the brick and t the thickness of mortar, the relation between these is
   (a) L = 2B  (b) L = B + t
   (c) L = B + 2 t  (d) L = 2B + t
3. The weight of a standard brick should be
   (a) 1000 g  (b) 1500 g
   (c) 2500 g  (d) 3000 g
4. Frog is provided in
   (i) 9 cm high bricks only
   (ii) 4 cm high bricks only
   (iii) extruded bricks only
   Of the above
   (a) only (i) is correct  (b) only (ii) is correct
   (c) (i) and (iii) are correct  (d) (i), (ii) and (iii) are correct
5. The most important purpose of frog in a brick is to
   (a) emboss manufacturer's name
   (b) reduce the weight of brick
   (c) form keyed joint between brick and mortar
   (d) improve insulation by providing 'hollows'
6. Consider the following statements :
   (1) About 25% of alumina in brick earth imparts the plasticity necessary for moulding bricks into required shape
   (2) Iron pyrite present in brick earth preserves the form of the bricks at high temperatures.
   (3) Presence of weeds in brick earth makes the bricks unsound.
   Which of these statements are correct?
   (a) 1 and 2  (b) 1 and 3
   (c) 2 and 3  (d) 1, 2 and 3
7. Water absorption for I$^{st}$ class bricks should not be more than
   (a) 12%  (b) 15%
   (c) 20%  (d) 25%
8. For hidden masonry works the bricks used should be
   (a) Ist Class  (b) IInd Class
   (c) IIIrd Class  (d) for any of the above
9. For centring of R.C.C. structures the bricks used should be
   (a) Ist Class  (b) IInd Class
   (c) IIIrd Class  (d) IVth Class
10. Match List-I (Constituents of bricks) with List-II (Corresponding influence) and select the correct answer using the codes given below the lists :

| *List-I*<br>*(Constituents of bricks)* | *List-II*<br>*(Corresponding influence)* |
|---|---|
| A. Alumina | 1. Colour of brick |
| B. Silica | 2. Plasticity recovery for moulding |

| | |
|---|---|
| C. Magnesia | 3. Reacts with silica during burning and causes particles to unite together and development of strength |
| D. Limestone | 4. Preserves the form of brick at high temperature and prevents shrinkage |

Codes :

| | A | B | C | D | | A | B | C | D |
|---|---|---|---|---|---|---|---|---|---|
| (a) | 2 | 1 | 4 | 3 | (b) | 3 | 4 | 1 | 2 |
| (c) | 2 | 4 | 1 | 3 | (b) | 3 | 1 | 4 | 2 |

11. The IS classification of bricks is based on
    (i) compressive strength
    (ii) water absorption
    (iii) dimensional tolerance
    Of the above
    (a) only (i) is correct
    (b) (i) and (ii) are correct
    (c) (i) and (iii) are correct
    (d) (i), (ii) and (iii) are correct
12. Which of the following constituent in earth gives plasticity to mould bricks in suitable shape?
    (a) Silica
    (b) Lime
    (c) Alumina
    (d) Magnesia
13. The raw bricks shrink during drying and warp during burning because of
    (a) less lime in brick earth
    (b) less silica and excess magnesia in brick earth
    (c) excess of alumina and silica in brick earth
    (d) alkalis in brick earth
14. The moulded bricks are dried before burning to an approximate moisture content of
    (a) 3%
    (b) 6%
    (c) 10%
    (d) 20%
15. In the process of brick manufacturing the pug mill is used in which of the following operation?
    (a) Weathering
    (b) Blending
    (c) Tempering
    (d) Burning
16. Consider the following statements :
    For the manufacture of good quality bricks it is essential to
    (1) use a reverberatory kiln
    (2) blend the soil with clay or sand as deemed appropriate
    (3) knead the soil in a ghani
    (4) temper the soil in a pug mill
    Of these statements
    (a) 1 and 3 are correct
    (b) 2 and 4 are correct
    (c) 1, 3 and 4 are correct
    (d) 2, 3 and 4 are correct

17. Bricks are burnt at a temperature range of
    (a) 500° to 700° C
    (b) 700° to 900° C
    (c) 900° to 1200° C
    (d) 1200° to 1500° C

18. Match List-I with List-II and select the correct answer using the codes given below the lists :

| *List-I*<br>*(Ingredients)* | *List-II*<br>*(%)* |
|---|---|
| (A) Silica | (1) 50 – 60% |
| (B) Lime | (2) 20 – 30% |
| (C) Alumina | (3) 10% |
| (D) Alkalis | (4) <10% |

Codes :

| | A | B | C | D |
|---|---|---|---|---|
| (a) | 1 | 2 | 3 | 4 |
| (b) | 1 | 3 | 2 | 4 |
| (c) | 1 | 2 | 4 | 3 |
| (b) | 2 | 1 | 4 | 3 |

19. Match List-I with List-II and select the correct answer using the codes given below the lists :

| *List-I*<br>*(Ingredients)* | *List-II*<br>*(Property)* |
|---|---|
| A. Silica | 1. imparts durability, prevents shrinkage |
| B. Alumina | 2. softens clay |
| C. Lime | 3. renders clay plastic |
| D. Ferric Oxide | 4. lowers fusing point |

Codes :

| | A | B | C | D |
|---|---|---|---|---|
| (a) | 1 | 3 | 2 | 4 |
| (b) | 1 | 4 | 2 | 3 |
| (c) | 1 | 3 | 4 | 2 |
| (b) | 4 | 3 | 1 | 2 |

20. Excess of silica makes brick
    (a) brittle on burning
    (b) to melt on burning
    (c) to crack on drying
    (d) to warp

21. Which of the following is harmful in the clay used for making bricks?
    (a) Iron oxide
    (b) Iron pyrite
    (c) Alkali
    (d) Magnesia

22. When carbonaceous materials in the form of bituminous matter of carbon are present in the clay, the bricks will
    (a) be spongy
    (b) have black core
    (c) be porus
    (d) have cracks

23. Swollen structure and white blotches will be found in bricks when
    (a) carbon
    (b) bituminous matter
    (c) organic matter
    (d) sulphur
    is present in clay used for making bricks.

24. Consider the following properties
    1. Strength development during firing
    2. Drying shrinkage
    3. Shaping

    When flyash is used as an additive with clay in brick manufacturing the improved properties are
    (a) 1 only
    (b) 2 only
    (c) 1 and 2
    (d) 1 and 3
25. Consider the following stages in the manufacturing of bricks :
    1. Weathering
    2. Moulding
    3. Tempering

    The correct sequence of these stages in the manufacturing of the bricks, is
    (a) 1, 2, 3
    (b) 2, 3, 1
    (c) 1, 3, 2
    (d) 3, 2, 1
26. Consider the following operations of preparation of brick earth
    1. Digging
    2. Weatherig
    3. Tempering
    4. Blending
    5. Unsoiling

    The correct sequence of these operations are
    (a) 5, 1, 2, 4, 3
    (b) 5, 1, 3, 2, 4
    (c) 1, 5, 2, 4, 3
    (d) 5, 1, 4, 2, 3
27. In some brick masonry walls, patches of whitish crystals were found on the exposed surfaces, also chipping and spalling of bricks took place from the same walls. Which among the following are the causes of these defects?
    1. Settlement of foundation
    2. Over-loading of the walls
    3. Sulphate attack
    4. Efflorescence

    Codes :
    (a) 1 and 2
    (b) 2 and 3
    (c) 2 and 4
    (d) 3 and 4
28. Efflorescence of bricks is due to
    (a) soluble salts present in clay for making bricks
    (b) high porosity of bricks
    (c) high silt content in brick earth
    (d) excessive burning of bricks
29. What is efflorescence ?
    (a) Formation of white patches on the brick surface due to insoluble salts in the brick clay.
    (b) Swelling of brick due to presence of carbonaceous matter and gass
    (c) Deformation of brick due to exposure to rain
    (d) Impurities in the brick clay which show after burning
30. Consider the following with regards to burning of clay bricks.
    1. The clay loses its plasticity
    2. Carbonate minerals are decarbonated
    3. Some of the carbonaceous matter is burnt
    4. Clay mass is converted into glass like substance
    5. Ferrous iron is oxidized to ferric form

The changes that occur during dehydration period are :
(a) 1, 3, 5
(b) 1, 2, 4
(c) 1, 2, 3
(d) 2, 4, 5

31. When the deposits of efflorescence is more than 10 per cent but less than 50 per cent of the exposed areas of brick, the presence of efflorescence is classified as
(a) slight
(b) moderate
(c) heavy
(d) serious

32. A good brick when immersed in water bath for 24 hours, should not absorb water more than
(a) 20% of its dry weight
(b) 15 % of its saturated weight
(c) 10% of its saturated weight
(d) 20% of its saturated weight

33. Crushed pottery is used in the manufacture of
(a) fire bricks
(b) stone bricks
(c) terracotta
(d) clay tiles

34. Match List I with List II and select the correct answer used the codes given below the lists:

| *List - I* | *List - II* |
|---|---|
| A. Acid Brick | 1. Made from Quartzite |
| B. Silica Brick | 2. Made from magnesite |
| C. Basic Brick | 3. Made from fire clay |
| D. Neutral Brick | 4. Made from chromite |

Codes :
(a) A B C D
3 1 2 4
(b) A B C D
3 2 1 4
(c) A B C D
4 1 2 3
(b) A B C D
1 2 3 4

35. The compressive strength of burnt clay bricks as per IS 1077 is
(a) 100 kg / $cm^2$
(b) 150 kg / $cm^2$
(c) 100 – 150 kg / $cm^2$
(d) 35 – 350 kg / $cm^2$

36. The deformation of the shape of bricks caused by the rain water falling on the hot bricks is known as
(a) spots
(b) checks
(c) chuffs
(d) blisters

37. The defect in clay products because of imprisoned air during their moulding is known as
(a) blister
(b) lamination
(c) cracks
(d) spots

38. Basic refractory bricks consist of
(a) silica bricks
(b) ganister bricks
(c) magnesia bricks
(d) chromite bricks

39. In steel industry the bricks used for lining furnances should be
(a) acid refractory
(b) basic refractory
(c) neutral refractory
(d) heavy duty

40. Terracotta is burned in
(a) pug mill
(b) reverberatory furnance
(c) muffle furnance
(d) puddling furnance

41. Glazing of clay product is achieved by throwing sodium chloride in kiln at a temperature of
    (a) 600 – 800° C (b) 700 – 1000° C
    (c) 900 – 1100° C (d) 1200 – 1300° C
42. The bricks which are extensively used for basic refractories in furnaces are
    (a) chrome bricks (b) sillimanite bricks
    (c) magnesite bricks (d) fosterite bricks
43. Which one of the following procedure is applied to determine the soundness of bricks?
    (a) Immersing the bricks under water for 16 hrs and determining the quantity of water absorbed by the brick
    (b) Immersing the brick under water for 24 hrs and determining its expansion using Le Chatelier apparatus
    (c) Taking two bricks, hitting one against the other and observing whether they break or not and the type of sound produced while hitting
    (d) Scratching the brick by finger nail and noting whether any impression is made or not
44. The number of bricks required per cubic meter of brick masonry is
    (a) 400 (b) 450
    (c) 500 (d) 550

## Answers Table

| | | | | | | | | | |
|---|---|---|---|---|---|---|---|---|---|
| 1. (a) | 2. (d) | 3. (d) | 4. (a) | 5. (c) | 6. (b) | 7. (b) | 8. (b) | 9. (b) | 10. (c) |
| 11. (c) | 12. (c) | 13. (c) | 14. (a) | 15. (c) | 16. (b) | 17. (c) | 18. (b) | 19. (c) | 20. (a) |
| 21. (b) | 22. (b) | 23. (d) | 24. (c) | 25. (c) | 26. (a) | 27. (d) | 28. (a) | 29. (a) | 30. (c) |
| 31. (b) | 32. (a) | 33. (c) | 34. (a) | 35. (d) | 36. (c) | 37. (b) | 38. (c) | 39. (a) | 40. (c) |
| 41. (d) | 42. (c) | 43. (a) | 44. (c) | | | | | | |

# 3

# ROCKS AND STONES

## 3.1 INTRODUCTION

The history of mankind is supposed to have begun with the stone age marked by the use of implements and weapons made of stone. Prior to that, the difference between animals and homosapiens was largely physical. But once human beings started using stones, the world of both changed entirely.

Stone has been defined as the natural, hard substance formed from minerals and earth material which are present in rocks. Rock may be defined as the portion of the earth's crust having no definite shape and structure. Almost all rocks have a definite chemical composition and are made up of minerals and organic matter. Some of the rock-forming minerals are quartz, felspar, mica, dolomite, etc. The various types of rocks from which building stones are usually derived are granite, basalt, trap, marble, slate, sandstone and limestone.

Use of stone in building construction is traditional in the places where it is produced, although even there its high cost imposes limitations on its use. The conditions which govern the selection of stone for structural purposes are cost, fashion, ornamental value and durability.

Stone has been used in the construction of most of the important structures since prehistoric age. Most of the forts world over, the Taj Mahal of India, the famous pyramids of Egypt and the great wall of China are but a few examples. Stone has also been extensively used in almost all the elements of building structures, as load carrying units as well as for enhancing the beauty and elegance of the structure. As building material stone has gradually lost importance with the advent of cement and steel. Secondly, the strength of the structural elements built with stones cannot be rationally analysed. Other major factors in overshadowing its use are the difficulties in its transportation and dressing which consume a lot of time resulting in slow pace of construction.

## 3.2 ROCK-FORMING MINERALS

Being aggregations of minerals, the properties of rocks are dependent upon the character of these constituents, identified by their physical properties such as hardness, cleavage, streak, colour, lustre, specific gravity and shape of crystals.

Some minerals feature great strength, hardness and resistance to chemical attack (quartz); others have poor strength and readily soak in water (gypsum); some minerals display a great tendency to cleavage and split readily along one or several directions (mica), thus decreasing the strength of the rock they make up. Some of the important properties of minerals are as follows:

***Hardness*** is probably the most important property for rapid determination of minerals. It is measured by scratching the mineral with a series of substances of known variation in hardness using the following scale of Mohs:

| | |
|---|---|
| Talc, easily scratched with the thumb-nail: | 1 |
| Gypsum, scratched by the thumb-nail: | 2 |
| Calcite, not scratched by thumb-nail but easily cut by knife: | 3 |
| Fluorite, can be cut by knife with greater difficulty than calcite: | 4 |
| Apatite, can be cut only with difficulty by knife: | 5 |
| Orthoclase, can be cut with knife with great difficulty on thin edges: | 6 |
| Quartz, not scratched by steel, scratches glass: | 7 |
| Topaz: | 8 |
| Sapphire: | 9 |
| Diamond: | 10 |

If, for example, a given substance is scratched by fluorite and not by calcite its hardness is between 3 and 4.

***Cleavage*** is the measure of the capability of some minerals to split along certain planes parallel to the crystal faces. The various types of cleavage seen in the minerals are Basal, Prismatic, Cubic, Rhombohedral and Octahedral.

***Streak*** is the colour of the mineral in powder-form. For some minerals, their colour is seen to be entirely different from that of their powder, which makes streak a useful property in the identification of ore-minerals. Streak can be readily observed by scratching it on a streak plate made of unglazed porcelain or roughened glass.

***Colour*** is a valuable characteristic of metallic minerals, but less reliable for non-metallic minerals.

***Lustre*** is shine on the surface of a mineral and its appearance under reflected light is classified as vitreous (glassy), greasy, pearly, resinous, dull, silky and metallic.

***Crystal:*** The crystal form is of importance when a mineral has had the opportunity to develop its natural shape. This is not the normal condition in rock structure.

The most common mineral constituents of building stones together with their chemical composition and important physical properties are listed in Table 3.1.

### Table 3.1 Chemical Composition and Physical Properties

| *Mineral* | *Chemical Composition* | *Hardness (Mohs scale)* | *Specific Gravity* | *Streak* | *Colour* | *Lusture* | *Cleavage* | *Durability* |
|---|---|---|---|---|---|---|---|---|
| 1. Quartz | Silicon dioxide ($SiO_2$) | 7 | 2.60–2.64 | | Colourless, white to grey, sometimes brown to black | Vitreous | No cleavage (Perfect) | Soluble in hydrofluoric acid, weathers well |
| 2. Felspar | Alumino silicates with potash (orthoclase) Example—<br>$K_2O.Al_2O_3.6SiO_2$ | 6 | 2.50–2.60 | White | Deep to whitish pink | Vitreous to pearly | Straight splitting | Less durable than quartz |
| | Alumino Silicates with soda (plagioclase) Examples—<br>$Na_2O.Al_2O_3.6SiO_2$<br>$CaO.Al_2O_3.2SiO_2$ | | 2.60–2.80 | Grey to white | | | Oblique splitting materials | |
| 3. Mica | Silicates of alumina with hydrogen (hydrous alumino silicate) and potash (Muscovite)<br>$KAl_2\ (AlSi_3O_{10})\ (OH)_2$ | 2–3 | 2.70–3.00 | Colourless to grey | Colourless or grey to brown | Vitreous to pearly transparent | Can be split along one plane into very thin tough plates | Does not weather well |
| | Silicates of alumina with hydrogen (hydrous alumino silicates) iron and magnesia (Biotite)<br>$K\ (Mg, Fe)_3\ (AlSi_3O_{10})\ (OH)_2$ | | 2.80–3.10 | | Brown to black | Vitreous to pearly opaque | No cleavage | Does not weather well |
| 4. Amphibole | Silicate of iron, lime, magnesia or alumina (Hornblende)<br>$(Ca\text{-}Na)_{2-3}\ (Mg, Fe, Al)_5\ Si_6\ (SiAl)_2\ O_{22}\ (OH)_2$ | | 2.9–3.5 | | Dark green to black | Vitreous | Perfect on two planes 124°, but do not seperate and flake like mica | Weathers fairly well<br>Weathers poorly |

*(Contd)*

**Table 3.1** (Contd)

| Mineral | Chemical Composition | Hardness (Mohs scale) | Specific Gravity | Streak | Colour | Lusture | Cleavage | Durability |
|---|---|---|---|---|---|---|---|---|
| | Silicates of lime and magnesia (Tremolite) $CaMg_5Si_8O_{22}(OH)_2$ | 5–6 | 2.90–3.20 | Uncoloured grey or brown | White to grey | Vitreous to silky | | |
| 5. Pyroxene | Silicates of lime, alumina, magnesia and iron (Augite) $X_2Si_2O_6$ | 5–6 | 3.20–3.60 | | Green to black | | Good on two planes 93° apart | Weathers fairly well |
| 6. Olivine | Silicate of iron and magnesia $(Mg, Fe)_2 SiO_4$ | 6 | 3.20–3.60 | No streak | Greenish | Vitreous | Indistinct | Weathers poorly |
| 7. Chlorates | Aluminium silicates with iron and magnesia $(Mg, Fe, Al)_6 (Al, Si)_4 O_{10} (OH)_8$ | 2–3 | 2.65–2.95 | White to green | Greenish | Vitreous to pearly | No cleavage | |
| 8. Garnet | Silicates of iron and alumina $X_3Y_2 (SiO_4)_3$ | 6–8 | 3.5–4.3 | No streak | Red | Viterous | Poor | Renders stone difficult to dress and polish |
| 9. Serpentine | Hydrous silicate of magnesia $Mg_3Si_2O_5 (OH)_4$ | 4.00 | 2.30–2.60 | White | Greenish | Greasy | | Soluble in hydrochloric acid and weathers poorly |
| 10. Talc | Hydrous silicate of magnesia $Mg_3Si_4O_{10} (OH)_2$ | 1.0 | 2.70–2.80 | | White to green | Pearly | Splits into thin brittle plates | Weathering results in serpentine |
| 11. Calcite | Calcium carbonate $CaCO_3$ | 3 | 2.70 | No streak | White when pure | Vitreous | Perfect in three directions | Efferversces in dilute cold hydrochloric acid, not durable |

***(Contd)***

**Table 3.1** (Contd)

| *Mineral* | *Chemical Composition* | *Hardness (Mohs scale)* | *Specific Gravity* | *Streak* | *Colour* | *Lusture* | *Cleavage* | *Durability* |
|---|---|---|---|---|---|---|---|---|
| 12. Dolomite | Calcium magnesium carbonate $MgCO_3.CaCO_3$ | 3–4 | 2.85 | Pink and white | | Vitreous, to pearly | Perfect | Effervesces in hot dilute hydrochloric acid, not very durable |
| 13. Gypsum | Hydrous calcium sulphate $CaSO_4.2H_2O$ | 2 | 2.30–2.40 | White | Colourless white | Vitreous, pearly or silky | Perfect in one plane | Soluble in hydrochloric acid and slighly in water |
| 14. Limonite | Hydrous sesquioxide of iron | 5–6 | 3.60–4.00 | Yellowish brown | Yellow to dark | Dull | | No cleavage soluble in hydrochloric acid |
| 15. Magnetite | Ferrous and Feric oxide of iron $Fe_3O_4$ | 5–7 | 4.40–5.20 | Black | Black | Metallic | Indistinct | Slowly soluble in hydrochloric acid |
| 16. Pyrite | Iron disulphide $FeS_2$ | 6–7 | 4.90-5.20 | Green to black | Brassy yellow | Metallic | no cleavage | Oxidises readily when exposed to weather |

## 3.3 CLASSIFICATION OF ROCKS

The rocks may be classified on the basis of their geological formation, physical characteristics and chemical composition as shown in Fig. 3.1.

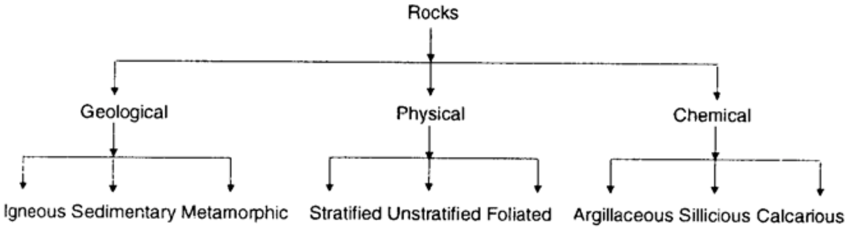

**Fig. 3.1 Classification of Rocks**

### Based on Geological Formation

This classification is based upon the mode of the formation. The rock cycle is shown in Fig. 3.2. On the basis of geological classification, rocks are classified as igneous, sedimentary and metamorphic.

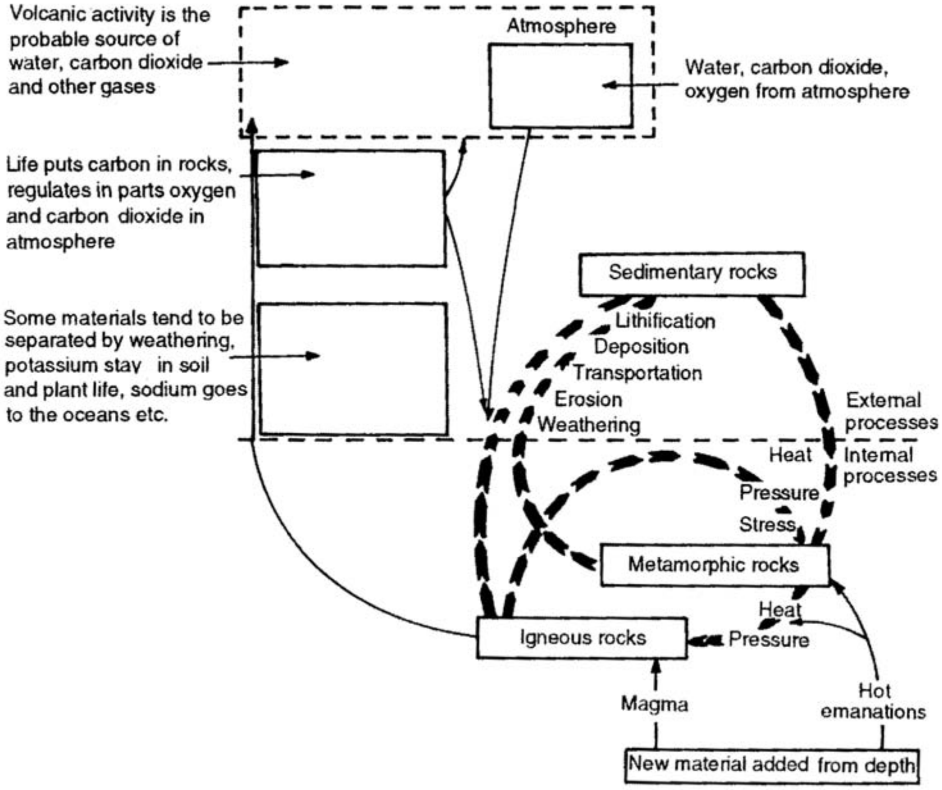

**Fig. 3.2 The Rock Cycle**

***Igneous Rocks*** also known as *primary, unstratified* or *eruptive* rocks are of volcanic origin and are formed as a result of solidification of molten mass lying below or above the earth's surface. The inner layers of the earth are at a very high temperature causing the masses of silicates to melt. This molten mass called *magma* is forced up as volcanic eruptions and spreads over the surface of earth where it solidifies forming basalt and trap. These are known as *effusive* rocks. If the magma solidifies below the earth's surface itself, the solid crystalline rock is termed as *deep-seated plutonic* rock. The examples are granite, syenite, diorite and gabbro. If the magma solidifies at a relatively shallow depth, the resultant rock possesses a finely grained crystalline structure—and is termed as *hypabyssal.* Dolerite is such a rock. The principal constituents of magma are quartz, mica and felspar. The texture of the rock is greatly influenced by the rate of cooling of the magma. The classification of igneous rocks on the basis of silica content is as in Table 3.2.

**Table 3.2 Classification of Igneous Rocks**

| *Type* | *% of Silica* | *Example* |
|---|---|---|
| Acid Rocks | 70–80 | Granite, rhyolite |
| Intermediate rocks | 60–70 | Syenite, andesite |
| Basic rocks | 45–60 | Gabbro and some varieties of dolerite |
| Ultra-basic rocks | 30–45 | Peridotite and some varieties of basalt and dolerite |

***Notes:*** **(i) When magma cools rapidly, its mass expands under the pressure of intensively evolving gases. Subsequent rapid cooling of swollen lumps of magma gives rise to glassy porous rock known as pumice used as aggregate for light weight concrete, as heat insulating material and as an active mineral admixture to lime and cements.**

**(ii) During volcanic eruptions, ashes and sands are mixed with molten lava to form tuff lava. Cemented tuff lava is called volcanic tuff. Tuffs have a glassy structure due to rapid cooling and are used as aggregate for light weight concrete and mortar, and as an active admixture to air-setting lime or cement.**

***Sedimentary Rocks*** are also known as *aqueous* or *stratified* rocks. The various weathering agencies, e.g. rain, sun, air, frost, etc. break up the surface of earth. Rain water carries down these broken pieces to the rivers. As the rivers descend down to the plains, the velocity decreases gradually and the sediments (disintegrated rock pieces, sand, silt, clay, debris, etc.) in the water settle. Due to the seasonal variation, sedimentation takes place in layers. With time, the sediments get consolidated in horizontal beds due to the pressure exerted by overlying material.

The properties of the sedimentary rocks vary considerably depending upon the nature of the sediment and type of bond between the sediment and grains. Usually, the rocks are well stratified and show well defined bedding planes. The rocks are soft and can be easily split up along the bedding as well as normal planes. The examples of sedimentary rocks resulting from the precipitation of salts in drying water basin (chemical deposits) are gypsum, anhydrite, magnesite, dolomite, lime tufas. Sedimentary rocks resulting from the accumulation of plant or animal remains (organogenous rocks) are limestone, shale, chalk, diatomite and tripoli. The examples of rocks resulting from the deterioration of massive magmatic or sedimentary rocks (fragmental rocks) are sandstone, sand, gravel, carbonate conglomerate and breccia.

***Metamorphic Rocks*** are formed from igneous or sedimentary rocks as a result of the action of the earth movements, temperature changes, liquid pressures, etc. The resultant mass may have a foliated structure, e.g. slate, gneiss, schist and phyallite or non-foliated structure, e.g. marble, quartzite and serpentine. Examples of transformation of some of the rocks to metamorphic rocks are given in Table 3.3.

**Table 3.3 Examples of Transformation of Rocks**

| *S.No.* | *Original rock* | *Metamorphic rock* |
|---|---|---|
| 1. | Granite | Gneiss |
| 2. | Syenite | Gneiss |
| 3. | Sandstone | Quartzite |
| 4. | Limestone | Marble, Schist |
| 5. | Marl | Marble |
| 6. | Shale | Slate, schist, phyallite |
| 7. | Mudstone | Slate |
| 8. | Dolomite | Marble |
| 9. | Dolerite, basalt | Schist |
| 10. | Felsite, tuff | Schist, slate |
| 11. | Conglomerate | Gneiss, schist |

### Based on Physical Characteristics

The rocks may be classified as stratified, unstratified and foliated.

***Stratified Rocks*** show distinct layers along which the rocks can be split. The examples are sandstone, limestone, shale, slate, marble, etc.

***Unstratified Rocks*** do not show any stratification and cannot be easily split into thin layers. The examples of such rocks are granite, basalt, trap, etc.

***Foliated Rocks*** have a tendency to split up only in a definite direction. Most of the metamorphic rocks have a foliated structure, except for quartzite and marble which have granulose structure.

### Based on Chemical Characteristics

The rocks may be classified as argillaceous, silicious and calcarious.

***Argillaceous:*** The principal constituent is clay ($Al_2O_3$). The rocks are hard and brittle, e.g. slate, laterite, etc.

***Silicious:*** The principal constituent is silica ($SiO_2$), i.e. sand. The rocks are very hard and durable, e.g. granite, basalt, trap, quartzite, gneiss, syenite, etc.

***Calcarious:*** The principal constituent is lime, e.g. limestone, marble, dolomite, etc.

## 3.4 QUARRYING OF STONES

The only operation involved in the production of natural stone is the quarrying process. The open part of the natural rock from which useful stone is obtained is known as *quarry*. While selecting a quarry site, the points to be borne in mind are availability of sufficient quantity of the stone of desired quality, proper transportation facilities, cheap local labour, problems associated with drainage of rain water, location of important and permanent structures in the vicinity and site for dumping refuse.

## Stone Quarrying Tools

Some of the quarrying tools shown in Fig. 3.3 are wedge, pin, hammer, dipper or scraping spoon, tamping bar, priming needle, jumper, borer, claying iron, crow bar.

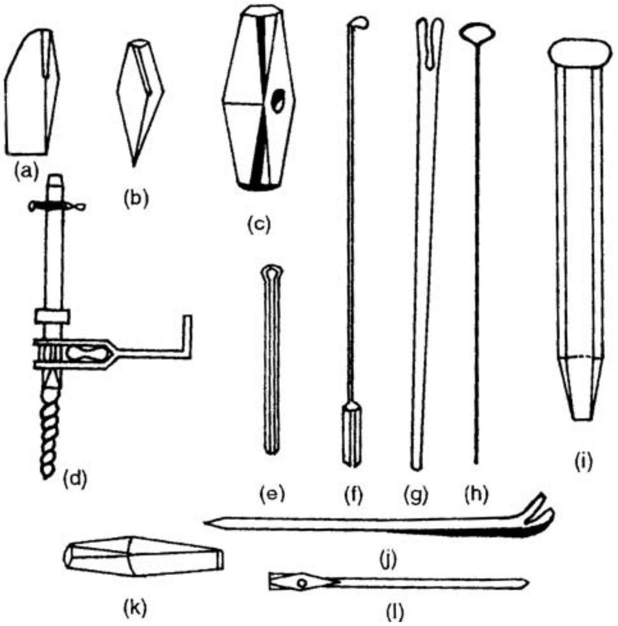

(a) Wedge
(b) Pin
(c) Hammer
(d) Ratchet boring machine
(e) Drill
(f) Dipper
(g) Tamping bar
(h) Priming needle
(i) Jumper
(j) Crow bar
(k) Chisel pointed wedge
(l) Claying iron

**Fig. 3.3 Tools for Quarrying Stones**

## Methods of Quarrying

Rocks suitable for the manufacture of stone materials are called *useful minerals* and the operations involved in obtaining minerals are called *mining.* In the process of mining, voids formed are called *excavations*, and the mined deposits are the *quarries.* The purpose of quarrying is to obtain stones for various engineering purposes. A knowledge of various quarrying methods is essential but does not make one very much more competent to choose or specify a stone for building work. Depending upon the nature and surface of rocks and the purpose for which stones are needed, quarrying is done by excavating, wedging, heating or blasting.

***Excavating:*** Stones buried in earth or under loose overburden are excavated with pick axes, crow bars, chisels, hammers, etc.

***Wedging:*** This method of quarrying is suitable for costly, soft and stratified rocks such as sandstone, limestone, laterite, marble and slate.

About 10–15 cm deep holes, at around 10 cm spacing, are made vertically in the rock. Steel pins and wedges or plugs (conical wedges) and feathers (flat wedges) as shown in Fig. 3.4 are inserted in them. The latter arrangement of plugs and feather is better. These plugs are then struck simultaneously with sledge hammer. The rock slab splits along the lines of least resistance through holes. In case of soft rocks, dry wooden pegs are hammered in the holes and water is poured over them. The pegs being wet swell and exert pressure causing the rocks to crack along the line of holes. Then, the wedges are placed on the plane of cleavage (the joint of two layers) on the exposed face of rock and are hammered. The slab is completely detached and taken out with the help of crow bars and rollers. In this method, the wastage is minimum and the slabs of required size and shape can be quarried.

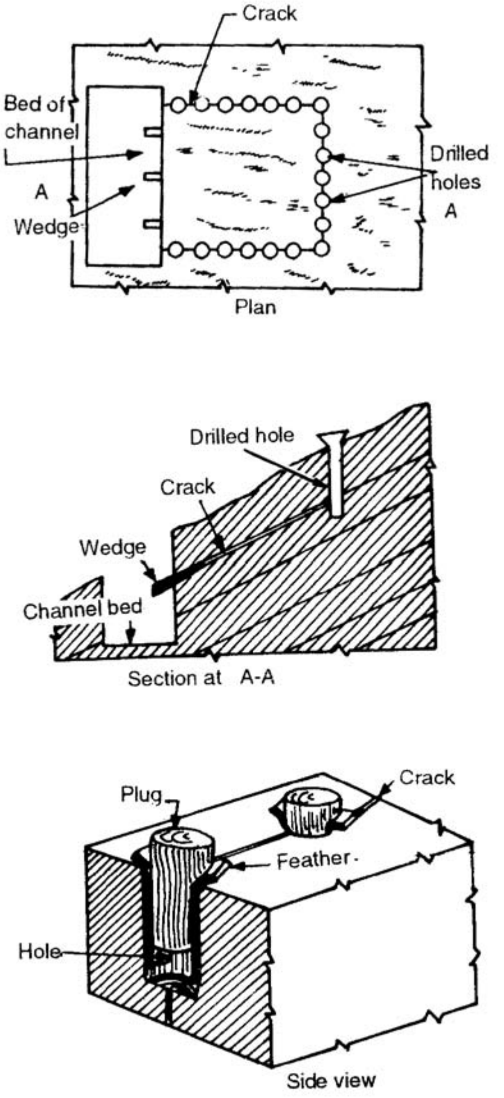

**Fig. 3.4 Quarrying by Wedging**

***Heating*** is most suitable for quarrying small, thin and regular blocks of stones from rocks, such as granite and gneiss. A heap of fuel is piled and fired on the surface of rock in small area. The two consecutive layers of the rock separate because of uneven expansion of the two layers. The loosened rock portions are broken into pieces of desired size and are removed with the help of pick-axes and crow-bars. Stone blocks so obtained are very suitable for coarse rubble masonry. Sometimes, intermediate layers are to be separated from the top and bottom layers. In such a case, the intermediate layer is heated electrically and the expansion separates it from the other two.

***Blasting:*** Explosives such as blasting powder, blasting cotton, dynamite and cordite are used. The operations involved are boring, charging, tamping and firing.

*Boring:* Holes are drilled or bored in the rock to be dislodged. For vertical holes, jumper is used whereas for inclined or horizontal holes, boring bars are used. One person holds the jumper exactly in the place where hole is to be made. The other person strikes it up and down and rotates it simultaneously. Water is poured in the hole regularly during the operation to soften the rock and facilitate drilling. The muddy paste generated in the process is removed from holes by scrapping. For hard rocks, machine drilling is employed instead of hand drilling.

*Charging* The holes are dried completely and the required amount of charge is placed in the holes. For drying the holes, rag is tied in the scrapper and is moved in the hole from where it absorbs the moisture, if any. In case it is found that water is oozing into the hole, water-tightness is ensured inside the hole.

*Tamping:* After placing the charge in the hole, a greased priming needle, projecting a little outside the hole, is placed in the hole which is then filled up with damp clay or stone dust in layers tamped sufficiently with a braccd tamping rod. The priming needle should be kept on rotating while tamping is going on. This is done so that the needle remains loose in the hole. The priming needle is then taken out and 60 to 75 per cent of space created by withdrawal of needle is filled with gun powder. A Bickford fuse, a small rope of cotton coated with tar, is placed just touching the needle. The other end of the fuse is kept of sufficient length so that the person igniting it can move away to a safe place. Blasting powder and cordite are ignited by means of a fuse, whereas gun cotton and dynamite are exploded by detonation.

***Notes:*** **(i) Detonation is achieved with detonators. These are copper tubes about 5 mm in diameter and 25 mm long containing 5 to 20 grains of fulminate of mercury. These can be exploded by an ordinary fuse or by an electric current. An electric detonator is shown in Fig. 3.5.**

**(ii) Tamping should be done very carefully otherwise the explosive fires back in the hole, since the line of least resistance (LLR) is the shortest distance (Fig. 3.6) from the explosive in the hole to the nearest rock face, fissure, crack, fault or plane of cleavage.**

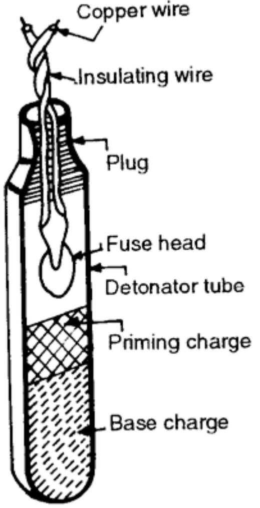

**Fig. 3.5 Electrical Detonator**

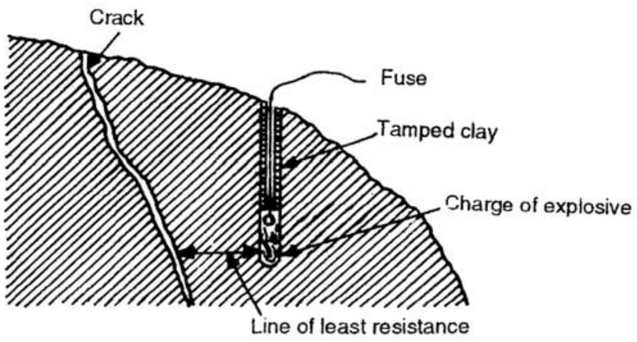

**Fig. 3.6 Tamped and Charged Blast Hole**

*Precautions in Blasting:* Accidents may take place during blasting. Following are some of the points which should be taken note of:

1. Blasting should not be carried out in late evening or early morning hours. The blasting hours should be made public and a siren should warn the workmen and nearby public timely to retire to a safe distance.
2. The danger zone, an area of about 200 m radius, should be marked with red flags.
3. First aid should be available.

4. The number of charges fired, the number of charges exploded and the misfires should be recorded.
5. Explosives should be stored and handled carefully.
6. Detonators and explosives should not be kept together.
7. Cartridges should be handled with rubber or polythene gloves.
8. A maximum of 10 bore holes are exploded at a time and that also successively and not simultaneously.

*Explosives Used in Quarrying:* The composition and characteristics of the various blasting-powders and their suitability are given in Table 3.4.

*Storage of Explosives:* The explosives should be stored in a magazine (a special type of building) which should be away from residential areas, petrol depots, etc. The magazine should have ventilators at high levels and should have concealed wiring. It should be protected from lightning. Smoke or fire should not be allowed in the nearby area. Explosives should be protected from extreme heat or cold and also from moisture. They should be handled carefully and gently. The magazine should be surrounded by barbed wire and the entry should be restricted.

*Quantity of Explosive Required:* The quantity of explosive required depends upon several factors such as strength of explosive; method of blasting; number of bore holes—their size, position, etc. and the type and mass of rock to be dislodged. It is very difficult to incorporate all the factors in an expression and obtain the exact amount of explosive required. A rough estimate can be made by:

$$A = \frac{L^2}{0.008}$$

where A = quantity of gunpowder or dynamite ($g$)
L = length of line of least resistance ($m$)

## 3.5 NATURAL BED OF STONE

It is the original bed, plane or position occupied by a stone during its formation in a sedimentary rock. The stones should be so placed that the load line is at right angles to the natural bed. In the case of metamorphic rocks, the plane of foliation or the plane of cleavage is assumed to be its natural bed. It is very difficult to trace the natural bed in the case of igneous rocks and the natural bed is not given due attention. The right placement of stones with regard to the load line is shown in Fig. 3.7 for a few cases.

## 3.6 SEASONING OF STONE

A freshly cut stone carries some natural moisture known as *quarry sap* making it soft and workable. The quarry sap is a mineral solution and reacts chemically with the mineral constituents when the stone is exposed to atmosphere after quarrying. The stone becomes harder and compact. The process takes about 6 to 12 months for complete seasoning. When the quarry sap evaporates, it leaves a crystalline film on the faces of the stone and makes them weather resistant. The dressing before seasoning improves the weather resistance. As such, the dressing, carving and and moulding, etc. should be done as early after quarrying as possible.

### Table 3.4 Composition and Characteristic of Explosives

| *S.No.* | *Types of explosive* | *Composition* | *Characteristics* | *Suitability* |
|---|---|---|---|---|
| 1. | Blasting power or gun powder | Saltpetre 65%<br>Sulphur 15%<br>Charcoal 20% | 1. It has great lifting power but has a little shattering effect.<br>2. It is easily ignited.<br>3. It is cheap. | 1. In quarrying large blocks. |
| 2. | Blasting cotton or gun cotton | It is cotton saturated with nitric acid. | 1. When dry, it is highly inflammable.<br>2. It can detonate by a shock or even by sun light.<br>3. It has good shattering effect but no lifting power. | 1. Used where demolitions are required. |
| 3. | Dynamite | It is 75 per cent nitroglycerine absorbed in 25 per cent sandy earth or solids. | 1. It is sensitive to friction and shock.<br>2. It is the most shattering and powerful explosive.<br>3. It is unsuitable in cold climates.<br>4. Specific gravity 1.4. | 1. In small bore holes.<br>2. In small quarries<br>3. In damp situations, small bore holes. |
| 4. | Cordite | It is gelatenized combination of nitroglycerine and nitrocellulose. | 1. It is smokeless explosive and produces powerful gases.<br>2. It is similar to dynamite. | 1. Under water. |
| 5. | Gelatine dynamite | It is 80 per cent of blasting gelatine with nitrate of potash and wood pulp. | 1. It is tough, rubber textured explosive.<br>2. It is the most powerful nitroglycerine explosive.<br>3. Very high water resistance.<br>4. High plasticity.<br>5. Specific gravity 1.5. | 1. In deep wells<br>2. Underground works<br>3. In wet conditions |
| 6. | Gelignite | It is 65 per cent of blasting gelatine and 35 per cent of absorbing powder. | 1. It is a powerful explosive.<br>2. It can be handled more conveniently than dynamite. | 1. Under water |
| 7. | Lithofracteor | Nitroglycerine 33%<br>Nitrate of baryata 16%<br>Sulphur 26%<br>Kieselguhr 22%<br>Charcoal 3% | 1. Similar to dynamite but has less power. | 1. In tunnels |
| 8. | Rock-a-Rock | Potassium chorate 79%<br>Nitrobenzol 21% | 1. High water resistance. | 1. Most effective under water |

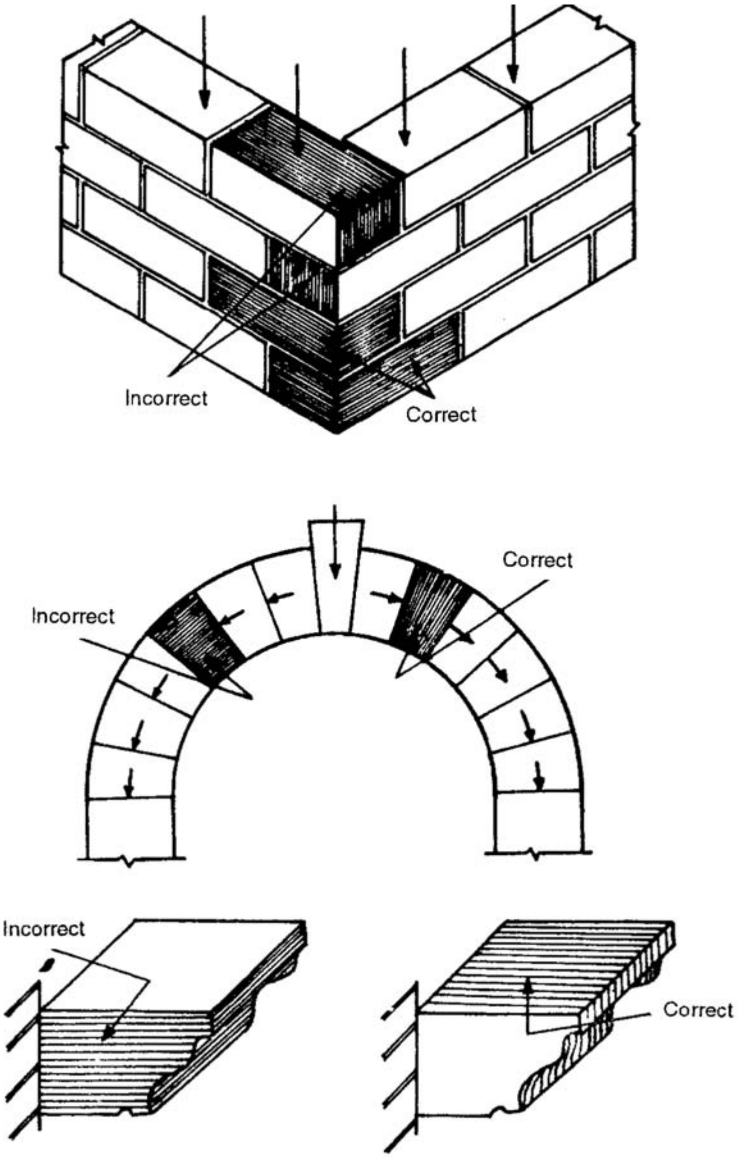

**Fig. 3.7 Position of Natural Bed of Stones in Structures**

## 3.7 DRESSING OF STONE

A quarried stone has rough surfaces, which are dressed to obtain a definite and regular shape. Dressing of stones is done immediately after quarrying and before seasoning to achieve less weight for transportation. Dressing of stone provides pleasing appearance, proper bedding with good mortar joints, special shapes for arches, copings, pillars, etc. The various types of dressed stones are shown in Fig. 3.8.

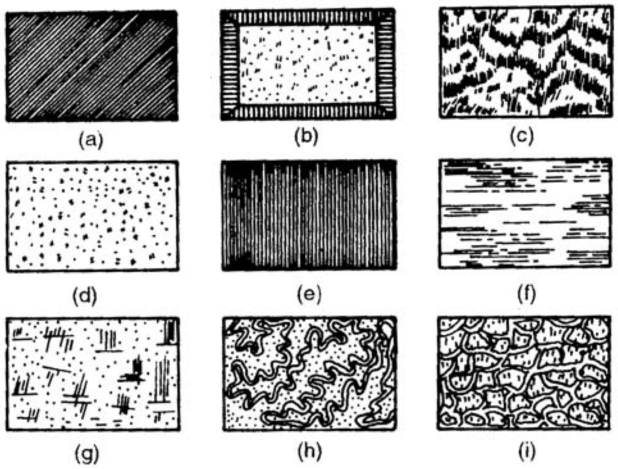

**(a) Stroked**
**(b) Punched**
**(c) Rock faced**
**(d) Sparrow picked**
**(e) Tooled**
**(f) Sawn**
**(g) Combed**
**(h) Vermiculated**
**(i) Reticulated**

**Fig. 3.8 Dressed Stone Surfaces**

### Stone Dressing Tools

The dressing tools are shown in Fig. 3.9. They are wedge, pitching tool, boaster, scabbing hammer, mash hammer, separated pick, punch, scabbing pick, crow bar, axe punch, dressing knife, splitting chisel.

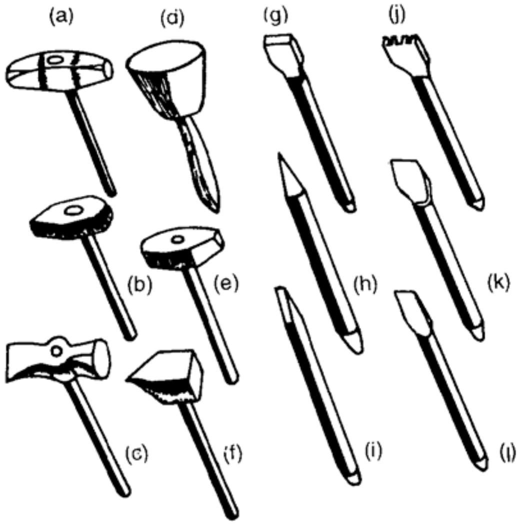

(a) Mash hammer
(b) Face hammer
(c) Mason's hammer
(d) Mallet
(e) Spalling hammer
(f) Scabbling hammer
(g) Drafting chisel
(h) Point chisel
(i) Punch chisel
(j) Crow chisel
(k) Soft stone chisel
(l) Plane chisel

**Fig. 3.9 Tools for Cutting and Dressing Stones**

## 3.8 USES OF STONES

Use of stone as building material depends upon the nature of the work, type of the structural element in which it is to be used and its quality, availability and transportation cost. For structural purpose, granite, gneiss, trap, sandstone, limestone, marble, quartzite and slate are most useful.

On the basis of the method of manufacture, items and materials from natural stones are classified as Sawn—obtained either from massive rocks by stone-cutting and stone-splitting machines (large stones) or from semi-product blocks by appropriate working (facing slabs, windows sill slabs, etc.); Split—obtained by splitting and finishing blocks (curb stones, paving blocks, etc.); Roughly split—manufactured by oriented splitting of blocks (bedded stone); Fractured—produced by blasting rocks and separating finer sizes (quarry stone); Crushed—produced by crushing and screening (crushed stone, artificial sand) and; Ground—obtained by grinding rocks (ground mineral powder, stone powder).

***Foundation and Wall Items:*** Quarry, split and sawn stones from rocks are used to erect the substructure of buildings. Piece stones sawn and split from limestone, sandstone, dolomite and volcanic tuff are used for walls, piers, abutments, etc.

***Facing and Architectural Items:*** Facing slabs and stones, stairs and landings, parapets, etc. are made of slabs sawn or split from semi-finished product blocks with glossy, dull, ground, sawn, pointed, fluted or rock finish. Facing slabs of granite, gabbro, basalt, marble, breccia, limestone, sandstone and volcanic tuff are generally used.

***Building Items:*** Elements of stairs, landings, parapets and guard rails are manufactured from granite, marble, limestone, tuff, etc. Pedestal slabs and stones for farming doorways, cornices and window-sill slabs are made from the same material as the facing slabs.

***Road Construction Items:*** Curb stones—intended to separate roadways from sidewalks; Paving blocks—used for pavements; Cobble stone—used to reinforce slopes of earth works and banks of water basins; Crushed stone—a mixture of jagged stone fragments (< 70 mm); Gravel—loose agglomeration of rock fragments ( 70 mm) and Sand—loose mass of mineral and rock particles (0.14–5 mm) obtained from natural stone are used in road construction.

***Underground Structures and Bridges*** are built of slabs and stones from igneous and sedimentary rocks. Tunnels and above-water elements of bridges are built of granite, diorite, gabbro and basalt. Face stones and facing slabs for tunnels and bridges are given rock face, grooved or fluted finishes.

***Heat and Chemically Resistant Items*** are manufactured from non-weathered rocks. For high temperature working conditions, they are made from chromite, basalt, andesite and tuffs. Building elements are protected against acid (except hydrofluoric acid and fluosilicic acids) by using slabs made of granite, syenite, and silicious stones. Limestones, dolomites, marble and magnesite show excellent resistance against alkalis. When high temperature and chemical attack is expected, crushed stone and sand for concrete and mortar are used.

## 3.9 CHARACTERISTICS OF GOOD BUILDING STONE

A good building stone should have the following qualities.

***Appearance:*** For face work it should have fine, compact texture; light-coloured stone is preferred as dark colours are likely to fade out in due course of time.

***Structure:*** A broken stone should not be dull in appearance and should have uniform texture free from cavities, cracks, and patches of loose or soft material. Stratifications should not be visible to naked eye.

***Strength:*** A stone should be strong and durable to withstand the disintegrating action of weather. Compressive strength of building stones in practice range between 60 to 200 $N/mm^2$.

***Weight:*** It is an indication of the porosity and density. For stability of structures such as dams. retaining walls, etc. heavier stones are reauired, whereas for arches, vaults, domes, etc. light stones may be the choice.

***Hardness:*** This property is important for floors, pavements, aprons of bridges, etc. The hardness is determined by the Mohs scale (Section 3.2).

***Toughness:*** The measure of impact that a stone can withstand is defined as toughness. The stone used should be tough when vibratory or moving loads are anticipated.

***Porosity and Absorption:*** Porosity depends on the mineral constituents, cooling time and structural formation. A porous stone disintegrates as the absorbed rain water freezes, expands, and causes cracking. Permissible water absorption for some of the stones is given in Table 3.5.

**Table 3.5 24-Hours Water Absorption of Stones by Volume**

| *S.No.* | *Types of Stone* | *Water absorption (% not greater than)* |
|---|---|---|
| 1. | Sandstone | 10 |
| 2. | Limestone | 10 |
| 3. | Granite | 1 |
| 4. | Trap | 6 |
| 5. | Shale | 10 |
| 6. | Gneiss | 1 |
| 7. | Slate | 1 |
| 8. | Quartzite | 3 |

***Seasoning:*** The stone should be well seasoned.

***Weathering:*** The resistance of stone against the wear and tear due to natural agencies should be high.

***Workability:*** Stone should be workable so that cutting, dressing and bringing it out in the required shape and size may not be uneconomical.

***Fire Resistance:*** Stones should be free from calcium corbonate, oxides of iron, and minerals having different coefficients of thermal expansion. Igneous rock show marked disintegration principally because of quartz which disintegrates into small particles at a temperature of about 575°C. Limestone, however, can withstand a little higher temperature; i.e. up to 800°C after which they disintegrate.

***Specific Gravity:*** The specific gravity of most of the stones lies between 2.3 to 2.5.

***Thermal Movement:*** Thermal movements alone are usually not trouble-some. However, joints in coping and parapets open-out inletting the rain water causing trouble. Marble slabs show a distinct distortion when subjected to heat. An exposure of one side of marble slab to heat may cause that side to expand and the slab warps. On cooling, the slab does not go back to its original shape.

## 3.10 TESTING OF STONES

Building stones are available in large quantity in various parts of the country and to choose and utilize them for their satisfactory performance, it is necessary to test the stone for its strength properties, durability and quality.

## Durability Test

Some of the tests to check the durability of stone are as follows. Of these tests, the crystallization test is prescribed by Bureau of Indian Standards. The durability (soundness) test is performed to find out the capacity of stone to resist disintegration and decomposition.

***Smith Test:*** Break off the freshly quarried stone chippings to about the size of a rupee coin and put them in a glass of clean water, one-third full. If the water becomes slightly cloudy, the stone is good and durable. If water becomes dirty, it indicates that the stone contains too much of earthy and mineral matter.

***Brard's Test*** — *for frost resistance* — Few small pieces of freshly quarried stone are immersed in boiling solution of sulphate of soda (Glauber's salt) and are weighed. These are then removed and kept suspended for few days and weighed again. The loss in weight indicates the probable effect of frost.

***Acid Test*** — *to check weather resistance* — confirms the power of stones to withstand the atmospheric conditions. 100 g of stone chips are kept in a 5 per cent solution of $H_2SO_4$ or HCI for 3 days. Then the chips are taken out and dried. The sharp and firm corners and edges are indication of sound stone. This test is used to test the cementing material of sand stone.

***Crystallisation Test (IS 1126):*** Three test pieces of 50 mm diameter and 50 mm height are dried for 24 hours and are weighed ($W_1$). The specimens are suspended in 14 per cent sodium sulphate solution (density 1.055 $kg/m^3$) for 16 to 18 hours at room temperature (20° to 30°C). The specimens are then taken out of the solution and kept in air for 4 hours. They are then oven dried at a temperature of 105° ± 5°C for 24 hours and then cooled at room temperature. This process is repeated for 30 cycles. The specimens are weighed ($W_2$) and the difference in weight is found. This test is repeated thirty times and the loss in weight after every five cycles is obtained. The change in weight indicates the degree of decay of stone. Durability should be expressed in percentage as change in the weight. The average of three test results should be reported as durability value.

$$\text{Change in weight} = \frac{W_1 - W_2}{W_1}$$

where $W_1$ is the original weight of the specimen and $W_2$ is the weight of the specimen after 30 cycles of the test.

## Crushing Test

***Compressive Strength Test (IS: 1121 (Part I))*** Samples of stone weighing at least 25 kg each of the unweathered spcimen should be obtained from quarry. To test stone for compressive strength, specimen pieces in the form of cubes or cylinders are made from samples of rock. The lateral dimension or diameter of test piece should not be less than 50 mm and the ratio of height to diameter or lateral dimension should be 1:1. A minimum of three specimen pieces are tested in each saturated and dry conditions. Separate tests should be made for the specimen when the load to parallel to the rift and perpendicular to the rift. In all twelve test pieces should be used.

The specimen pieces of diameter or lateral dimension 50 mm are immersed in water at 20 to 30°C for 72 hours and are tested in saturated condition. The specimen pieces are also tested in dry condition by drying them in an oven at 105 ± 5°C for 24 hours and then cooled in a desiccator to 20–30°C. These are tested in universal testing machine. The load is applied gently at a rate of 14 $N/mm^2$ per minute until the resistance of the specimen piece to the increasing load breaks down and no greater load is sustained.

The compressive strength of the specimen piece is the maximum load in Newtons supported by it before failure occurs divided by the area of the bearing face of the specimen in $mm^2$. The average of the three results in each condition separately should be taken for the purpose of reporting the compressive strength of the sample.

When the ratio of height to diameter or lateral dimension differs from unity by 25 per cent or more, the compressive strength is calculated by the following expression.

$$C_c = \frac{C_p}{0.778 + 0.222\left(\frac{b}{h}\right)}$$

where $C_c$ = compressive strength of standard specimen piece

$C_p$ = compressive strength of the specimen having a height greater than the diameter or lateral dimension

$b$ = diameter or lateral dimension

$h$ = height

The crushing strength of stones varies in the range of 15–100 $N/mm^2$.

***Transverse Strength Test (IS: 1121 (Part II)):*** To test stone for transverse strength, specimen pieces are made in the form of blocks 200 × 50 × 50 mm. These are tested in saturated and dry conditions similar to as explained in the compressive strength test. Test apparatus used for testing is shown in Fig. 3.10. Each specimen piece is supported upon two self-aligning bearers

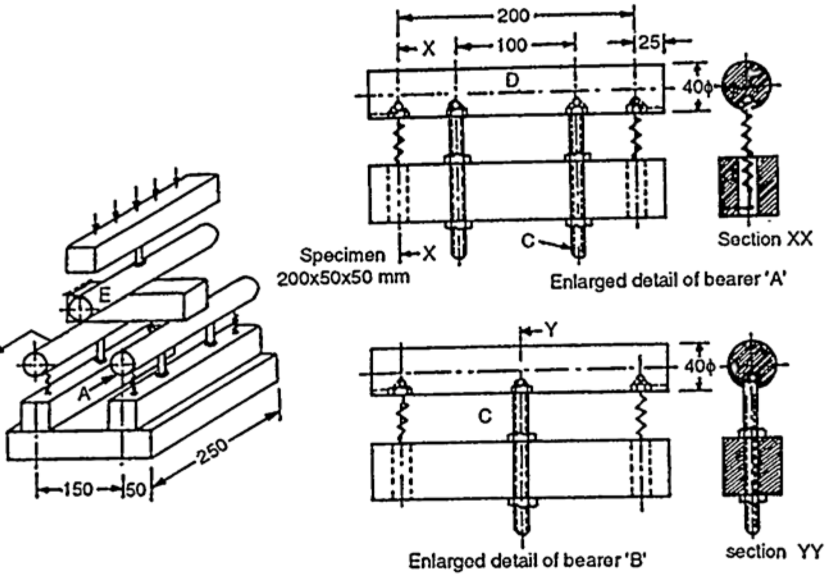

**Fig. 3.10 Arrangement for Transverse Strength Test of Stones**

A and B, 40 mm in diameter, the distance between centres of bearers being 150 mm. Bearer A is supported horizontally on two bearer screws C, which carry hardened steel balls D. Bearer B is supported on one such bearer screw and ball. The load is then applied centrally on the specimen piece at a uniform rate of 2 kN / min through a third bearer E, also 40 mm in diameter, placed midway between the supports upon the upper surface of the specimen S and parallel to the supports.

The transverse strength of the specimen is given by

$$R = \frac{3WL}{2bd^3}$$

where $R$ = transverse strength in $N/mm^2$
$W$ = central breaking load in N
$L$ = length of span in mm
$b$ = average width in mm of the test piece at the mid section
$d$ = average depth in mm of the test piece at the mid section

The average of the three results (separately for saturated and dry condition) should be taken for the purpose of determining transverse strength of sample. Any specimen giving result as much as 15 per cent below the average value should be examined for defects.

### Tensile Strength Test (IS: 1121 (Part III))

Three cylindrical test pieces of diameter not less than 50 mm and the ratio of diameter to height 1:2 are used to determine the tensile strength of the stone in each saturated (kept in water for 3 days at 20 to 30°C) and dry condition (dried in an oven at 105 ± 5°C for 24 hours and cooled at room temperature). The general arrangement for testing tensile strength of stone is shown in Fig. 3.11. Each test piece to be tested is sandwiched in between two steel plates of width 25 mm, thickness 10 mm and length equal to the length of test piece. The load is applied without shock and increased continuously at a uniform rate until the specimen splits and no greater load is sustained. The maximum load applied to the specimen is recorded.

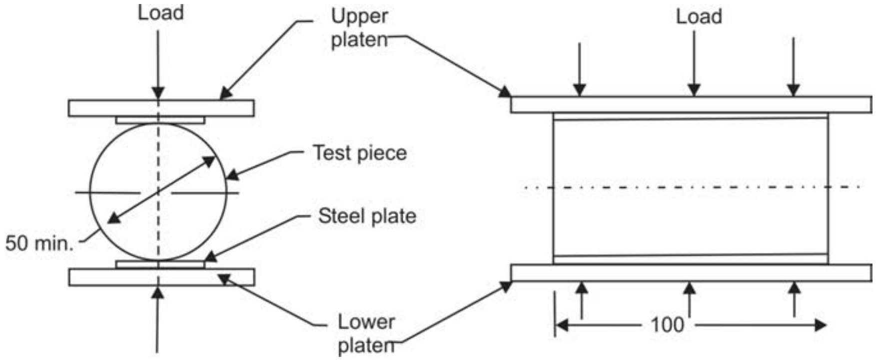

**Fig. 3.11 General Arrangement for Testing Tensile Strength of Building Stone**

Split tensile strength, $S = \frac{2W}{\pi dL}$

where

S = split tensile strength (N / mm$^2$)
W = applied load (N)
d = diameter of specimen (mm), and
L = length of specimen (mm)

The average of three results separately for each condition should be reported as split tensile strength of the sample. In case any test piece gives a value of as much as 15 per cent below the average, it should be examined for defects and if found defective the test piece should be rejected.

## Shear Strength Test (IS: 1121 (Part IV))

The test is carried out either in Jhonson shear tool (Fig. 3.12) or Dutton punching shear device (Fig. 3.13). Three test pieces are used for conducting the test in each of the saturated and dry condition.

Test piece for use in Jhonson shear tool should be bars 50 × 50 mm in section and not less than 100 mm in length and that for use with the Dutton punching shear device should be slabs 30 mm in thickness, 100 mm in width and not less than 100 mm in length.

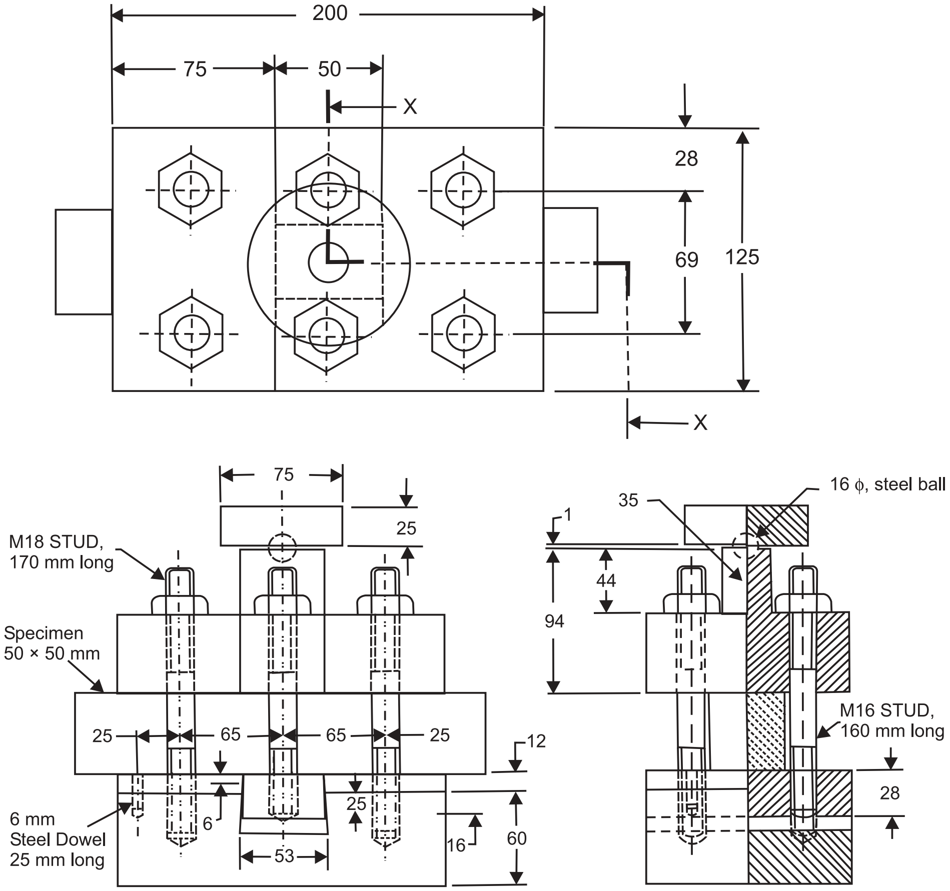

**Fig. 3.12 Detail of Modified Johnson Shear Tool**

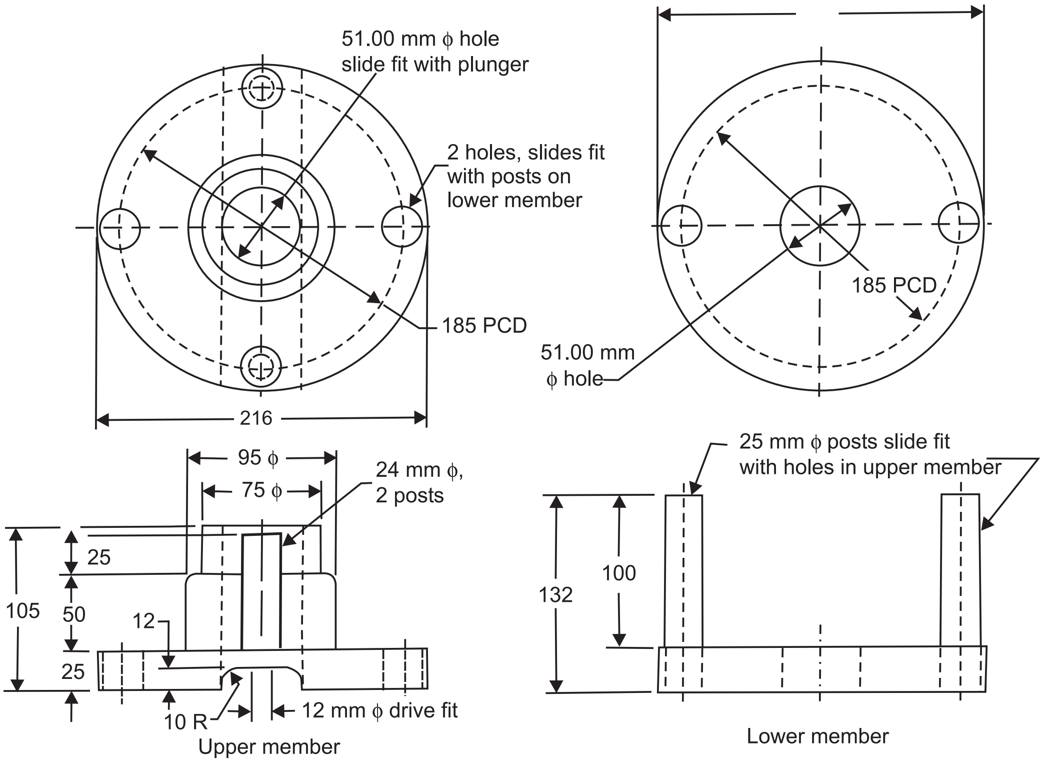

(a) Details of Parts

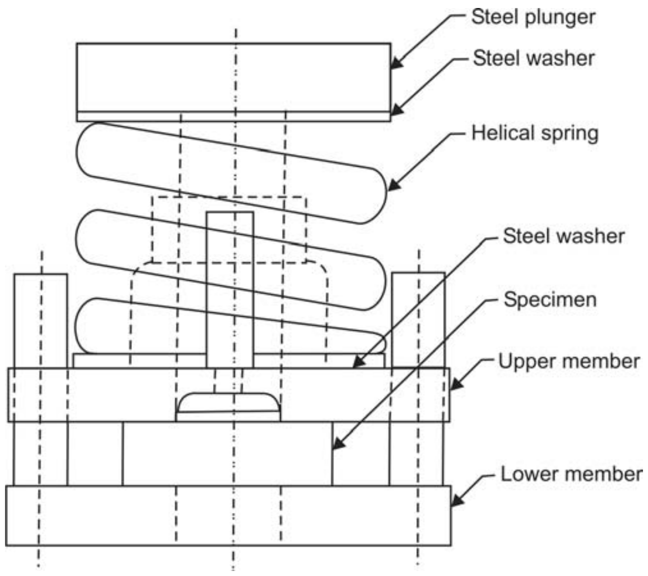

(b) Assembled view

**Fig. 3.13 Details of Dutton Punching Shear Device**

### Using Jhonson Shear Tool

The test piece is carefully centred in the shear tool and the bolts drawn up tightly. The tool is then centred in the testing machine with the centre of the spherical block in contact with the centre of the top portion of the plunger of the shear tool. The speed of the moving head of the testing machine during load application should not be more than 1 mm / min. During the test, the beam of the testing machine should be kept constantly in floating position. The shear strength of test piece is calculated by

$$S = \frac{W}{2A}$$

where

$S$ = Shear strength (N / mm$^2$)
$W$ = total maximum load (N)
$A$ = area of the centre cross-section of test piece (mm$^2$)

The average of all the three results separately for each condition is calculated and taken as the shear strength of the test piece.

### Using Dutton Punching Shear Device

Centre lines are laid over one surface of the slab. Thickness of the slab is measured at three points approximately equidistant around the circumference of a 50 mm circle centred on the intersection of the two center lines. The test piece is centred in the punching device keeping it under the plunger. The punching device is then centred in the testing machine with the centre of the spherical bearing block in contact with the centre of the top portion of the plunger of the shear device. The speed of the moving head of the testing machine during load application should not be more than 1 mm / min. During the test, the beam of the testing machine should be kept constantly in floating position. The shear strength of the test piece is calculated by

$$\mathrm{S} = \frac{\mathrm{W_t - W_i}}{\pi \mathrm{DT}}$$

where

S = Shear strength (N / mm$^2$)
$\mathrm{W_t}$ = total maximum load (N)
$\mathrm{W_i}$ = initial load (N) required to bring the plunger in contact with the surface of specimen
D = diameter (mm) of the plunger
T = thickness (mm) of the specimen

The average of all the three results separately for each condition is calculated and taken as shear strength of the test piece.

### Absorption Test (IS: 1124)

The selected test pieces of stone are crushed or broken and the material passing 20 mm IS Sieve and retained on 10 mm IS Sieve is used for the test. The test piece weighing about 1 kg is washed to remove particles of dust and immersed in distilled water in a glass vessel at room temperature 20 to 30° C for 24 hours. Soon after immersion and again at the end of soaking period, entrapped air is removed by gentle agitation achieved by rapid clock-wise and anti-clock-wise rotation of the vessel. The vessel is then emptied and the test piece allowed to drain.

The test piece is then placed on a dry cloth and gently surface dried with the cloth. It is transferred to a second dry cloth when the first one removes no further moisture. The test piece is spread out not more than one stone deep on the second cloth and left exposed to atmosphere away from direct sunlight or any other source of heat for not less than 10 minutes untill it appears to be completely surface dry. The sample is then weighed (B).

The sample is then carefully introduced in a 1000 ml capacity measuring cylinder and distilled water is poured by means of 100 ml capacity measuring cylinder while taking care to remove entrapped air, untill the level of water in the larger cylinder reaches 1000 ml mark. The quantity of water thus added is recorded in ml or expressed in gram weight (C).

The water in the larger cylinder is drained and the sample is carefully taken out and dried in an oven at 100 to 110°C for not less than 24 hours. It is then cooled in a desiccators to room temperature and weighed (A). The room temperature during the test is recorded.

$$\text{Apparent specific gravity} = \frac{A}{1000 - C}$$

$$\text{Water absorption} = \frac{B - A}{A} \times 100$$

$$\text{Apparent Porosity} = \frac{B - A}{1000 - C} \times 100$$

The true porosity shall be calculated from the following formula:

$$\text{True Porosity} = \frac{\text{True specific gravity} - \text{Apparent specific gravity}}{\text{True Specific gravity}}$$

Where

A = Weight of oven-dry test piece (g)
B = Weight of saturated surface-dry test piece (g)
C = Quantity of water added in 1000 ml jar containing the test piece (g)

***Hardness:*** This test is performed by scratching a stone with knife on Mohs scale.

***Toughness:*** This test is performed by breaking the stone with a hammer. Toughness is indicated by resistance to hammering.

## 3.11 DETERIORATION OF STONES

The various natural agents such as rain, heat, etc. and chemicals deteriorate the stones with time.

### Rain

Rain water acts both physically and chemically on stones. The physical action is due to the erosive and transportation powers and the latter due to the decomposition, oxidation and hydration of the minerals present in the stones.

***Physical Action:*** Alternate wetting by rain and drying by sun causes internal stresses in the stones and consequent disintegration.

***Chemical Action:*** In industrial areas the acidic rain water reacts with the constituents of stones leading to its deterioration.

*Decomposition:* The disintegration of alkaline silicate of alumina in stones is mainly because of the action of chemically active water. The hydrated silicate and the carbonate forms of the alkaline materials are very soluble in water and are removed in solution leaving behind a hydrated silicate of alumina (Kaolinite). The decomposition of felspar is represented as

$$\underset{\text{(Orthoclase)}}{K_2Al_2O_3.6H_2O} + CO_2 + nH_2O = \underset{\text{(Alkaline carbonate)}}{K_2CO_3} + \underset{\text{(Kaolinite)}}{Al_2O_3.2SiO_2.2H_2O} + \underset{\text{(Hydrated silicate)}}{4SiO_2.nH_2O}$$

*Oxidation and Hydration:* Rock containing iron compounds in the forms of peroxide, sulphide and carbonate are oxidised and hydrated when acted upon by aciduated rain water. As an example the peroxide—FeO is converted into ferric oxide—$Fe_2O_3$ which combines with water to form $FeO.nH_2O$. This chemical change is accompanied by an increase in volume and results in a physical change manifested by the liberation of the neighbouring minerals composing the rocks. As another example iron sulphide and siderite readily oxidize to limonite and liberates sulphur, which combines with water and oxygen to form sulphuric acid and finally to sulphates.

### Frost

In cold places frost pierces the pores of the stones where it freezes, expands and creates cracks.

### Wind

Since wind carries dust particles, the abrasion caused by these deteriorates the stones.

### Temperature Changes

Expansion and contraction due to frequent temperature changes cause stone to deteriorate especially if a rock is composed of several minerals with different coefficients of linear expansion.

### Vegetable Growth

Roots of trees and weeds that grow in the masonry joints keep the stones damp and also secrete organic and acidic matters which cause the stones to deteriorate. Dust particles of organic or nonorganic origin may also settle on the surface and penetrate into the pores of stones. When these come in contact with moisture or rain water, bacteriological process starts and the resultant micro-organism producing acids attack stones which cause decay.

### Mutual Decay

When different types of stones are used together mutual decay takes place. For example when sandstone is used under limestone, the chemicals brought down from limestone by rain water to the sandstone will deteriorate it.

### Chemical Agents

Smokes, fumes, acids and acid fumes present in the atmosphere deteriorate the stones. Stones containing $CaCO_3$, $MgCO_3$ are affected badly.

### Lichens

These destroy limestone but act as protective coats for other stones. Molluses gradually weaken and ultimately destroy the stone by making a series of parallel vertical holes in limestones and sandstones.

## 3.12 DURABILITY OF STONES

Quarrying and cutting have a great bearing on the weathering properties of stones. Stone from top ledges of limestone, granite and slate and from the exposed faces of the rock bed is likely to be less hard and durable. Highly absorbent stone should not be quarried in freezing weather since the rock is likely to split. The method of blasting and cutting also influences the strength of the stone and its resistance to freezing and temperature changes. Small, uniformly distributed charge of blasting powder has a lesser weakening effect than large concentrations of explosives. A porous stone is less durable than a dense stone, since the former is less resistant to freezing. Also, rocks with tortuous pores and tubes are more apt to be injured by freezing than those of equal porosity having straight pores and tubes. Repeated hammering in cutting is likely to injure the stone. Polished stone is more enduring than rough surfaced work, since the rain slides off the former more easily. Stones from stratified rocks should be placed along the natural bed in order to secure maximum weathering resistance. Pyrite, magnetite and iron carbonate oxidize in weathering and cause discolouration of the stone in which they are present. Since oxidation is accompanied by a change in volume, the surrounding structure is weakened.

## 3.13 PRESERVATION OF STONES

Preservation of stone is essential to prevent its decay. Different types of stones require different treatments. But in general stones should be made dry with the help of blow lamp and then a coating of paraffin, linseed oil, light paint, etc. is applied over the surface. This makes a protective coating over the stone. However, this treatment is periodic and not permanent. When treatment is done with the linseed oil, it is boiled and applied in three coats over the stone. Thereafter, a coat of dilute ammonia in warm water is applied.

The structure to be preserved should be maintained by washing stones frequently with water and steam so that dirt and salts deposited are removed from time to time. However, the best way is to apply preservatives. Stones are washed with thin solution of silicate of soda or potash. Then, on drying a solution of $CaCl_2$ is applied over it. These two solutions called Szerelmy's liquid, combine to form silicate of lime which fills the pores in stones. The common salt formed in this process is washed afterwards. The silicate of lime forms an insoluble film which helps to protect the stones.

Sometimes lead paint is also used to preserve the stones, but the natural colour of the stone is spoilt. Painting stone with coal tar also helps in the preservation but it spoils the beauty of the stone. Use of chemicals should be avoided as far as possible, especially the caustic alkalis. Although cleaning is easy with chemicals, there is the risk of introducing salts which may subsequently cause damage to the stone.

In industrial towns, stones are preserved by application of solution of baryta, $Ba(OH)_2$ — Barium hydrate. The sulphur dioxide present in acid reacts on the calcium contents of stones to form calcium sulphate. Soot and dust present in the atmosphere adhere to the calcium sulphate and form a hard skin. In due course of time, the calcium sulphate so formed flakes off and exposes fresh stone surface for further attack. This is known as *sulphate attack.* Baryta reacts with calcium sulphate deposited on the stones and forms insoluble barium sulphate and calcium hydroxide. The calcium hydroxide absorbs carbon dioxide from the air to form calcium carbonate.

$$Ba(OH)_2 + CaSO_4 \longrightarrow \underset{\text{(Barium sulphate)}}{BaSO_4} + \underset{\text{(Calcium hydroxide)}}{Ca(OH)_2}$$

$$\underset{}{Ca(OH)_2 + CO_2} \longrightarrow \underset{\text{(Calcium carbonate)}}{CaCO_3 + H_2O}$$

The question whether or not stone preservatives should be used on old and decayed stone is a difficult one. Real evidence of the value of various treatments is most difficult to assess. The treatments, if carefully applied under favourable circumstances, may result in an apparent slowing down of the rate of decay. However, the rate of decay of stone is so slow that a short period experience is of very little value in establishing the effectiveness of the treatment. Also, there is some evidence that treatments which appear to be successful for few years, fail to maintain the improvement. In fact, the value of preservatives is not yet proved, and they may actually be detrimental if judged over a long period.

## 3.14 SELECTION OF STONES

The conditions which govern the selection of stone for structural purposes are cost, fashion, ornamental value and durability, although the latter property is frequently overlooked or disregarded. Cost is largely influenced by transportation charges, difficulties in quarrying and cutting, the ornamental features, and the durability of stone. The type of dressing of stone may make a difference to the cost, particularly with the stones derived from igneous rocks. When the cost of quarried stone to cost of finished stone is considered, it will be found that the labour cost is far greater than the price of the stone. Thus, a difference in the price between two alternative stones is unimportant and it would be unwise to reject a more durable stone on the grounds that it was costly.

Another factor which should be considered is the suitability of the stone for the type of design, for example, for a highly carved design if, by mistake, a harder stone such as granite is selected the cost will be affected. Colour, arrangement and shape of mineral constituents greatly influence fashion and ornamental value. One of the first factors influencing the selection of stone for a particular work will be colour.

It is important that the designer is aware about how the colour is likely to change after long exposure and in particular how it may vary in polluted atmospheres. As an example limestone, being slightly soluble in water, will remain clean in portions facing rain but retain a film of soot in sheltered areas. This results in strong colour contrast.

Resistance to fire and weathering—factors which are largely influenced by the mineral constitution of the rock—are the most important determinators of durability. It is very important to select a stone according to its exposure conditions. Limestones when used in areas not exposed to rain but acted upon by sulphur gases of polluted atmosphere, form a hard and impermeable surface skin which subsequently blisters and flakes off. It must be noted that flaking of this kind occurs mainly on external work only, although the air inside the building is almost equally polluted, probably due to the damper conditions inside.

Limestones, sandstones and granites all tend to crack and spall when exposed to fire, and there is really little to choose between them in this respect. The type of stones usually selected for specific engineering works are given in Table 3.6.

## 3.15 COMMON BUILDING STONES

A list of the building stones commonly used along with the classification and characteristics is given in Table 3.7.

## Table 3.6 Stones for the Specific Uses

| S.No. | Type of Work | Recommended Stone Type | Reasons |
|---|---|---|---|
| 1. | Heavy engineering works such as bridge, piers, and abutments, break waters, docks and light houses, retaining walls | Granite (of its three varieties, viz. biotite-granite, homblende-granite and tourmaline-granite; biotite-granite is most widely used | It is heavy strong, durable and is capable of resisting large thrust |
| 2. | Building facing the sea | Granite, fine grained sandstone | These are not affected by the weathering action of sand particles blown by wind |
| 3. | Buildings in industrial areas | Granite, compact sandstone | These are restraint to acid fumes and smoke |
| 4. | Arches | Fine grained sandstone | Strong, durable |
| 5. | Building face work, carved works, ornamental works and statutes | (a) Marble, close grained sandstone | These are light weight, soft and easy to work and have pleasing colour and appearance |
| | | (b) Fine grained granite | It takes high polish |
| 6. | Fire resisting structure | Compact sandstone | Fireproof |
| 7. | Road metal and agregate for concrete | Granite, Basalt, Quartzite | Hard, tough and has high abrasion resistance |
| 8. | Railway ballast | Coarse grained sandstone, quartzite | These are hard and compact |
| 9. | Electrical switch board | Slate, marble | Poor conductor of electricity |

## Table 3.7 Classification and Uses of Building Stones

| S.No. | Type | Classification | Characteristics | Suitability |
|---|---|---|---|---|
| 1. | Granite | Igneous | 1. Sp. Gr. 2.63-2.75<br>2. Water absorption $< 1\%$<br>3. Compressive strength 77–130 N/mm$^2$<br>4. Difficult to work with<br>5. Fine grained variety takes high polish<br>6. Colour depends upon colour of felspar<br>7. Excess of felspar causes early decay | Most suitable for important engineering works such as bridge abutments, piers, dams, sea walls, light houses, etc. |
| 2. | Trap and Basalt (green stone, white stone, blue basalt) | Igneous | 1. Sp. gr. 2.6–3<br>2. Compressive strength 150–190 N/mm$^2$<br>3. Not easly to work with | Suitable for road metal and concrete aggregate. Its red and yellow varieties are used for decorative features in structures. |

*(Contd)*

**Table 3.7** ***(Contd)***

| *S.No.* | *Type* | *Classification* | *Characteristics* | *Suitability* |
|---|---|---|---|---|
| 3. | Serpentine | Igneous | 1. Compact, but soft and easy to work with<br>2. Affected by smoke and fumes | Suitable for ornamental works to quality building works. |
| 4. | Syenite | Igneous | Similar to granite | Most suitable for road metal. |
| 5. | Sandstone | Sedimentary | 1. Sp. gr. 2.65–2.95<br>2. Compressive strength 65 N/mm$^2$<br>3. Weathers well when free from lime and iron | In the form of flag stone for paving, tile stone for roofing, natural stone for ornamental work and grit for heavy engineering works. |
| 6. | Limestone | Sedimentary | 1. Sp. gr. 2.0–2.75<br>2. Compressive strength 55 N/mm$^2$<br>3. Affected by frost and atmosphere<br>4. Tough but soft enough to be cut | Suitable for flooring, paving and roofing and in the manufacture of lime and cement. |
| 7. | Kankar (impure limestone) | Sedimentary | 1. Irregular in shape<br>2. Porous structure<br>3. Nodular kankar variety is hard and tough | Black kankar is hard and is used as building material. Nodular kankar is used to produce hydraulic lime. |
| 8. | Mooram (Decomposed Laterite) | Sedimentary | 1. Strong and hard | Most suitable for surfacing fancy paths in gardens and bunglows. |
| 9. | Gneiss (Stratified granite) | Metamorphic | 1. Strong and durable<br>2. Can be split into thin slabs for railway tracks. | Suitable for rough stone masonry works, stone pitching and road metal |
| 10. | Laterite (Sandy clay stone) | Metamorphic | 1. Porous or cellular structure<br>2. Soft and easy to work with<br>3. Affected by the action of water | Suitable for rough stone masonry work. The nodular variety yields road metal |
| 11. | Marble | Metamorphic | 1. Specific gravity 2.65<br>2. Crushing strength 70 N/mm$^2$<br>3. Hard and compact<br>4. Takes fine polish<br>5. Sufficiently hard and compact | Most suitable for monuments, stattutes flooring, decorative and ornamental works. |
| 12. | Slate | Metamorphic | 1. Specific gravity 2.89<br>2. Compressive strength 77–210 N/mm$^2$<br>3. Hard and tough<br>4. Splits into thin slabs | Most suitable for roof coverings floorings, damp proofing and partitions. |

## 3.16 ARTIFICIAL STONES

Where durable natural stone is not available at reasonable cost, artificial stone, also known as *cast stone* becomes the choice. Artificial stone is made with cement and natural aggregates of the crushed stone and sand with desired surface finish. Suitable colouring pigments may be added. However, colouring should not exceed 15 per cent by volume. Cement and aggregates are mixed in proportion of 1:3.

Artificial stone can be moulded into the most intricate forms, cast into any size, reinforced to have higher strength, are most suitable for face work, since grooves, rebates, etc., can be cast easily and are economical. Some of the artificial stones available are as follows:

***Concrete Block*** are cast at site in the construction of piers or cast in moulds for steps, window sills, etc.

***Ransom Stone*** are prepared by mixing soda silicate with cement to provide decorative flooring. These are also known as *chemical stones*. These have compressive strength of about 32 $N/mm^2$.

***Victoria Stone*** are granite pieces with the surfaces hardened by keeping immersed in soda silicate for about two months.

***Bituminous Stone:*** Granite and diorite are impregnated with prepared or refined tar to form bituminous stone. These are used for providing noise, wear and dust resistant stone surfaces.

***Imperial Stone:*** Finely crushed granite is washed carefully and mixed with Portland cement. The mix is moulded in desired shape and then steam cured for 24 hours. The cured blocks are immersed in silicate tanks for three days. These stones are similar to Victoria stones.

***Artificial Marble*** can be either pre-cast or cast-in-situ. These are made from portland gypsum cement and sand. In the precast variety, the cast-stone is removed after three days. On the fifth day of casting these are treated with a solution, liquid fluorite of magnesia. It is then washed and wrapped in paper for 24 hours and then once again treated with the liquid. After one month the stone is polished by rubbing emery over the surface with a linen rag ball dipped in mixture of lime water and silicate of potash and then the process is repeated without emery. It is used for external works. Cast-in-situ variety is made by laying the mix on canvas, in thickness about 1.5 mm more than the required thickness of the stone. The surface is rubbed over and the airholes are filled with mix. Grinding is done by hand or machine. The surface is then rubbed with a polishing stone. Final rubbing is done with a ball of wool moistened with alum water dipped into a 1:3 mix of hartshorn powder and diatomite.

***Garlic stone*** is produced by moulding a mixture of iron slag and portland cement. These are used as flag stones, surface drains, etc.

## 3.17 APPLICATIONS OF STONES

Of the total amount of stone quarried for the building industry, about 75 per cent are used directly for concrete constructions and road making, the balance find applications in the manufacture of cement and other binding materials, in the chemical industry, as metallurgical fluxes, and for making wall from natural stones.

1. Natural stones materials, possessing high resistance to atmospheric agents, high mechanical strength and pleasant colours are widely used in construction as slabs for walls and foundations of buildings and installations, as facing slabs and stones for exterior and interior walls of buildings and installations, for roads, side walks, piers, unloading walls and other structures, where mechanical strength, durability and decorative requirements are of concern.
2. *Foundations and walls of underground parts of buildings* are made from quarry, split and sawn stones from igneous, sedimentary and metamorphic rocks. Prefabricated items and materials, intended for foundations and underground walls, should be manufactured from homogeneous stone with no traces of weathering, streaks of clay, stratification, or cracks. Piece stones, sawn and split from limestones, dolomite, sandstones and volcanic tuffs are used for aboveground walls (piers of bridges, embankment and side slope reinforcements, retaining walls) and for working to crushed stone.
3. Slabs for floors and facing of walls are rectangular, their dimensions depending on the kind of rock and the face finish. Thicknesses of items should be not less than: “rock” face, 150 mm; pointed, tooled and fluted, 60 mm; polished, 12 mm. Slabs are manufactured in a variety of sizes, from 200 to 400 mm in width and from 300 to 1000 mm in length. Stronger rocks go for larger slabs, and the weaker rocks, for smaller slabs.
4. Facing slabs and stones, parts of stairs and landings, parapets and guard rails are made of slabs sawn or split form natural stone and worked by mechanical means. Rocks used for the manufacture of slabs should have a compressive strength of not less than 5 Mpa and a coefficient of softening between 0.7 and 0.9. Elements of stairs and landings, parapets and guard rails are manufactured form marble, limestone, tuffs, granite, syenite and other rocks, and are given various finishes depending on the kind of rock similarly to facing slabs.
5. Pedestal slabs and stones for framing doorways, belts of cornices, corner and window-sill slabs fall into the category of profile wall facing elements. They are manufactured from the same material as the facing slabs and finished in a great variety of ways.
6. The materials and items from natural stones used in road construction are curbstones, paving blocks, bewn stone or cobblestone, crushed stone, sand and mineral powder. Materials and items for road construction are obtained from igneous and sedimentary rocks.

   *Curbstones* are intended to separate roadways form sidewalks in the streets, on bridges and in tunnels of mixed traffic. In shape, a curbstone is a slab 70 to 200 cm long with a sloped or vertical front face. These are available in high (40 cm) and low (30 cm) sizes, their widths at the tip being 10, 15 and 20 cm.

   *Stone paving blocks* are cut or hewn slabs 10 to 16 cm high, 12 to 15 cm wide and 15 to 25 cm long, close in shape to parallelopiped, with rectangular face surfaces. Compressive strength of the source rock should not be lower than 100 Mpa and the water absorption, not higher than 0.6%. It is used for pavements (particularly for steep slopes), tramcar track beds, tramcar landings, etc.

   *Cut cobblestone* is used to reinforce slopes of earthworks and banks of water basins, for road surfaces and bed courses. Cut stones are close in shape to a polyhedral prism or a truncated pyramid with face areas of 100, 200 and 400 cm$^2$ and heights of 16, 20 and 30 cm, respectively. Faces and beds should be parallel, their sides should be smooth, so as to allow a close fit with adjacent stones. A cobblestone is oval in shape, and its face should be larger in area than the bed. Size of cobblestones is the same as the of cut cobblestones.

7. *Underground structures and bridges* are built of slabs and stones form igneous and sedimentary rocks, tunnels and above-water parts of bridges are built of granite, diorite, gabbro, diabase and basalt with compressive strengths not less than 100 MPa. Facing slabs from solid limestone or sandstone should feature a compressive strength of not less than 60 MPa. Face stones and facing slabs for tunnels and bridges are given as “ rock” face, grooved or fluted finishes. Sizes and shapes of slabs and stones are specified by designs.
8. *Hydraulic structures* are generally built with natural stones or regular or irregular shape (hewn, rolled, cut, sawn, and also crushed stone) from igneous, metamorphic or sedimentary rocks. The stones should not be weathered or have any interlayers of soft rocks (such as clay, gypsum and other readily soaking or soluble inclusions) or porous shells and visible stratifications and cracks.
9. Crushed stone and sand is used for preparing mortars and concretes, for making road-beds and drainage constructions.

## EXERCISES

1. What are rock forming minerals? Give a brief account of the physical properties of the felspar, pyroxene, mica and gypsum group of minerals.
2. What is a mineral? What are their physical properties?
3. What is meant by ‘hardness of a mineral’? How can it be determined? What is Mohs scale of hardness?
4. Give the physical properties of the following minerals: garnet, olivine, felspar, mica and orthoclase.
5. Write short notes on the following:
   (a) Lustre (b) Cleavage
   (c) Hardness (d) Streak
6. Discuss the three important types of rocks and their formations.
7. What is meant by rock-cycle? How does it represent the sequence of formation of the three important types of rocks?
8. Give a brief account of the mode of origin and consolidation of igneous magma. How are igneous rocks classified?
9. Discuss the formation, mode of occurrence and engineering utility of sedimentary rocks.
10. Describe the important characteristic features and uses of the followings rocks:
    Granite, Syenite, basalt, sandstone, marble, gneiss.
11. Write short notes on the following, giving their uses in the civil engineering works:
    Granite, sand stone, marble, shale, dolerite.
12. State what do you know about formation, mode of occurrence and engineering utility of sedimentary rocks. What types of them are most common?
13. Name the three geological classes into which rocks can be divided. Describe the process of their formation. What are the important building stones which are derived from these rocks?

14. Briefly describe the following:
    (a) Dressing of stone
    (b) Quarrying
    (c) Preservation of stone
15. (a) Describe the principal rock forming minerals.
    (b) Describe the properties and uses of any five varieties of stones suitable for construction works.
16. What considerations would guide you in selecting stone for use in the situations mentioned below:
    (a) Face work of a building
    (b) Structure facing sea
    (c) Marine structures
    (d) Dams
    (e) Railway ballast
    (f) Road metal
17. (a) What are the tests to which a stone should be subjected before it is selected for building purposes?
    (b) How would you identify kankar, limestone, sandstone and laterite?
    (c) What are the different methods used in dressing building stones?
18. Name the stone you will select for the following works. Give a justification for your choice.
    (a) Random rubble masonry
    (b) Coarse aggregate for reinforced cement concrete
    (c) Bed plate for a girder
    (d) Building in industrial area
    (e) Cornice in a building
    (f) Railway goods platform
19. (a) What are the qualities you would look for in good building stone for masonry work?
    (b) What natural features will indicate whether the stone can be quarried by wedges?
    (c) What are the types of explosives generally used in blasting the rocks?
    (d) How do you quantify the requirement of explosives in blasting rocks?
20. (a) What precautions are exercised in storing explosives?
    (b) When is it required to quarry stones by blasting?
    (c) What is the significance of line of least resistance?
21. Give the characteristics and uses of the following stones:
    (a) Granite
    (b) Sandstone
    (c) Marble
    (d) Slate
22. (a) What are the important considerations which are to be carefully attended before selecting a quarry site.
    (b) Describe the process of blasting rocks. State the precautions to be exercised.
23. Describe the various weathering agencies responsible for deterioration of stones. Suggest the precautions to be exercised to reduce the decay of stones caused by these.
24. Distinguish between the following:
    (a) Quarry and mine
    (b) Stratified rocks and foliated rocks
    (c) Plutonic rocks and volcanic rocks
    (d) Siliceous rocks and argillaceous rocks.

25. Describe briefly the following:
    (a) Qualities of a good building stone
    (b) Natural bed of stone
    (c) Artificial stone
    (d) Quarry dressing of stone
26. (a) Describe briefly the tests you will conduct to assure the quality of stones.
    (b) It has been recommended to provide sandstone tiles on the facia of a multistorey building. The climate in the region is equatorial. If you agree with the selection, justify it or otherwise suggest some other stone with the reasons for the selection.
27. Name the various types of stones which are used for building works and give in brief the specifications for a good building stone.
28. (a) What is the natural bed of stone? Why is it necessary to set a stone along its natural bed?
    (b) How would you classify the stone for engineering works?
    (c) Discuss the agencies responsible for deterioration of stone. How can stone be preserved?
29. Briefly describe the following tests of stones:
    (a) Durability test
    (b) Crushing test
    (c) Shear strength test
    Also, state the significance of each of them.

## OBJECTIVE TYPE QUESTIONS

1. Match List-I with List-II and select the correct answer using the codes given below the lists:

| *List-I*<br>*(Mineral)* | *List-II*<br>*(Property)* |
|---|---|
| A. Felspar | 1. No cleavage |
| B. Gypsum | 2. Hardness |
| C. Mica | 3. Split along one or many directions |
| D. Limonite | 4. Readily soak in water |

Codes:

| | A | B | C | D |
|---|---|---|---|---|
| (a) | 1 | 4 | 3 | 2 |
| (b) | 1 | 4 | 2 | 3 |
| (c) | 4 | 2 | 3 | 1 |
| (d) | 2 | 4 | 3 | 1 |

2. Match List-I with List-II and select the correct answer using the codes given below the lists:

| *List-I*<br>*(Property of Mineral)* | *List-II*<br>*(Definition/measurement)* |
|---|---|
| A. Hardness | 1. Splitting of minerals along planes parallel to crystal faces |
| B. Streak | 2. Shine on mineral surface |
| C. Cleavage | 3. Mohs scale |
| D. Lusture | 4. Mineral colour in powdered form |

Codes:

| | A | B | C | D |
|---|---|---|---|---|
| (a) | 3 | 4 | 2 | 1 |
| (b) | 3 | 4 | 1 | 2 |
| (c) | 1 | 4 | 3 | 2 |
| (b) | 1 | 4 | 2 | 3. |

3. The texture of sandstone is
   (a) prophyritic (b) conglomerate
   (c) vesicular (d) granular crystalline
4. In rock masses reduction is strength occurs due to the presence of relatively large quantities of
   (a) silica (b) iron
   (c) orthoclase (d) hornblende
5. Which of the following is unstratified?
   (a) Sandstone (b) Limestone
   (c) Shale (d) Granite
6. Stone is placed along its natural bed so that the applied load is
   (a) parallel to it (b) normal to it
   (c) at 45° to it (d) at 30° to it
7. Marble is quarried by
   (a) blasting (b) excavating
   (c) heating (d) wedging
8. Which of the following is hardest mineral?
   (a) Quartz (b) Felspar
   (c) Garnet (d) Amphibole
9. Which of the following is the sofest mineral?
   (a) Mica (b) Gypsum
   (c) Olivine (d) Serpentine
10. Syenite is a
    (a) deep seated plutonic rock (b) hypabassal rock
    (c) basic rock (d) acid rock
11. Consider the following statements with regards to basalt
    1. It is an ultrabasic rock
    2. It contains 45 – 60% silica
    3. It is an effusive rick

    Of these the correct answer is
    (a) 1 only (b) 1 and 2
    (c) 1 and 3 (d) 2 and 3
12. Which of the following pairs is correctly matched?
    (a) Sandstone — Igneous rock
    (b) Limestone — Sedimentary rock
    (c) Basalt — Metamorphic rock
    (d) Granite — Argillaceous rock

13. Match List-I with List-II and select the correct answer using the codes given below the lists:

| *List-I*<br>*(Type of Rock)* | *List-II*<br>*(Formation process)* |
|---|---|
| A. Dolomite | 1. Action of earth movements |
| B. Shale | 2. Precipitation of salts |
| C. Sandstone | 3. Deterioration of magmatic rocks |
| | 4. Accumulation of plants and animal remains |

Codes:

| | A | B | C |
|---|---|---|---|
| (a) | 2 | 3 | 4 |
| (b) | 2 | 4 | 1 |
| (c) | 1 | 4 | 3 |
| (b) | 2 | 4 | 3 |

14. Granite, after metamorphism transforms to
(a) quartzite
(b) gneiss
(c) schist
(d) slate

15. Dolomite after metamorphism changes to
(a) marble
(b) quartzite
(c) slate
(d) phyallite

16. Marble is a
(a) stratified rock
(b) unstratified rock
(c) foliated rock
(d) argillaceous rock

17. The most suitable explosive used under water is
(a) dynamite
(b) gun powder
(c) gun cotton
(d) rock-a-rock

18. The most suitable explosive used in construction of tunnels is
(a) dynamite
(b) cordite
(c) gelignite
(d) lithofacteor

19. Which of the following is not a tool used for dressing stones?
(a) Mallet
(b) Mason's hammer
(c) Crow chisel
(d) Jumper

20 Which of following stones has least % water absorption by volume?
(a) Trap
(b) Slate
(c) Quartzite
(d) Limestone

21. Which of the following stone has maximum % water absorption by volume?
(a) Shale
(b) Granite
(c) Slate
(d) Quartzite

22. Trap is a
(a) argillaceous rock
(b) silicious rock
(c) calcarious rock
(d) stratified rock

23. A rough estimate of the quantity (A) of dynamite required in grams for blasting rocks is give by
(a) $L^2/0.008$
(b) $L^{2/3}/340$
(c) $L^2/500$
(d) none of the above

where L is the length of line of least resistance.

24. Match List-I with List-II and select the correct answer using the codes given below the lists:

*List-I*
*(Type of Explosive)*
A. Gun powder
B. Blasting cotton
C. Dynamite
D. Cordite

*List-II*
*(Main Ingredient)*
1. Cotton saturated with nitric acid
2. Saltpeter and charcole
3. Nitroglycerine absorbed in sandy earth
4. Combination of nitroglycerine and nitrocellulose

Codes:
(a) A B C D
3 1 2 4
(b) A B C D
2 1 4 3
(c) A B C D
2 1 3 4
(d) A B C D
2 3 1 4

25. The sp. gr. of most of stones lie between
(a) 1.8 to 2.2
(b) 2.5 to 3.0
(c) 3.0 to 3.5
(d) 3.5 to 4.5

26. Match List-I with List-II and select the correct answer using the codes given below the lists:

*List-I*
*(Test on stones)*
A. Absorption test
B. Attrition test
C. Brard's test

*List-II*
*(Property)*
1. Resistance to weathering
2. Resistance to abrasion
3. Quality
4. Resistance to frost

Codes:
(a) A B C
3 2 1
(b) A B C
3 2 4
(c) A B C
1 3 4
(b) A B C
4 2 1

27. The chemical used to protect stones in industrial towns is
(a) Ba $(OH)_2$
(b) $CaCl_2$
(c) $H_2SO_4$
(d) caustic alkalis

28. The most suitable stone for building piers is
(a) granite
(b) limestone
(c) sand stone
(d) marble

29. Match List-I with List-II and select the correct answer using the codes given below the lists:

*List-I*
*(Type of Structure)*
A. Breakwater
B. Arches
C. Road metal
D. Railway ballast

*List-II*
*(Type of Stone)*
1. Sandstone (coarse grained)
2. Basalt
3. Granite
4. Marble
5. Sand stone (fine grained)

Codes:

| | A | B | C | D |
|---|---|---|---|---|
| (a) | 3 | 4 | 2 | 5 |
| (b) | 2 | 4 | 3 | 1 |
| (c) | 1 | 3 | 2 | 5 |
| (d) | 3 | 5 | 2 | 1 |

30. Which of the following artificial stone is made using iron slag?
    (a) Imperial stone
    (b) Garlic stone
    (c) Ransom stone
    (d) Victoria stone

31. Match List-I with List-II and select the correct answer using the codes given below the lists:

| *List-I* | *List-II* |
|---|---|
| A. Smith test | 1. Frost |
| B. Brard test | 2. Durability |
| C. Hardness test | 3. Devil's |
| D. Attrition test | 4. Mohs scale |

Codes:

| | A | B | C | D |
|---|---|---|---|---|
| (a) | 3 | 1 | 4 | 2 |
| (b) | 2 | 4 | 1 | 3 |
| (c) | 1 | 2 | 4 | 3 |
| (d) | 2 | 1 | 4 | 3 |

32. Which of the following test is used to determine the rate of wear of stones?
    (a) Crushing test
    (b) Abrasion test
    (c) Attrition test
    (d) Impact test

33. For stones Mohs scale is used to determine
    (a) toughness
    (b) hardness
    (c) flakiness index
    (d) durability

34. Match List-I with List-II and select the correct answer using the codes given below the lists:

| *List-I*<br>*(Name of stone)* | *List-II*<br>*(Use of stone)* |
|---|---|
| A. Granite | 1. Ornamental work |
| B. Marble | 2. Ballast |
| C. Chalk | 3. Rough stone work |
| D. Laterite | 4. Manufacture of cement |

Codes:

| | A | B | C | D |
|---|---|---|---|---|
| (a) | 3 | 1 | 2 | 4 |
| (b) | 2 | 3 | 1 | 4 |
| (c) | 2 | 1 | 4 | 3 |
| (d) | 1 | 4 | 2 | 3 |

35. Marble is
    (a) crystalline lime stone
    (b) composed chiefly of silica and alumina
    (c) fine grained crystals of feldspar and hornblende
    (d) composed of carbonates of lime and magnesia

## Answer Table

| | | | | | | | | | |
|---|---|---|---|---|---|---|---|---|---|
| 1. (d) | 2. (b) | 3. (d) | 4. (c) | 5. (d) | 6. (b) | 7. (d) | 8. (c) | 9. (b) | 10. (a) |
| 11. (c) | 12. (b) | 13. (d) | 14. (b) | 15. (a) | 16. (a) | 17. (d) | 18. (d) | 19. (c) | 20. (b) |
| 21. (a) | 22. (b) | 23. (a) | 24. (c) | 25. (b) | 26. (b) | 27. (a) | 28. (a) | 29. (d) | 30. (b) |
| 31. (d) | 32. (c) | 33. (b) | 34. (c) | 35. (d) | | | | | |

## 4

# Wood and Wood Products

## 4.1 INTRODUCTION

Wood is a hard and fibrous substance which forms a major part of the trunk and branches of a tree. It can also be defined as a natural polymeric material which practically does not age. Wood as a building material falls in two major classes—natural and man-made. With the advances in science and technology, wood in its natural form as timber, lumber, etc. is being rapidly replaced by composite wood materials in which natural wood is just a basic ingredient of a matrix or a laminate. The latter are found to be more useful and adaptable as they may be treated chemically, thermally or otherwise as per requirements. Some examples are plywood, fibreboards, chipboards, compressed wood, impregnated wood, etc.

Wood has many advantages due to which it is preferred over many other building materials. It is easily available (this won’t be true after some years) and easy to transport and handle, has more thermal insulation, sound absorption and electrical resistance as compared to steel and concrete. It is the ideal material to be used in sea water. Wood is a good absorber of shocks and so is suitable for construction work in hilly areas which are more prone to earthquakes. Finally, since wood can be easily worked, repairs and alterations to wood work can also be done easily.

Owing to the above mentioned advantages, wood is very widely used in buildings as doors, windows, frames, temporary partition walls, etc. and in roof trusses and ceilings apart from formwork.

## 4.2 CLASSIFICATION OF TREES

Trees are classified as endogenous and exogenous according to the mode of growth.

### Endogenous Trees

Trees grow endwards, e.g. palm, bamboo, etc.

### Exogenous Trees

Trees grow outwards and are used for making structural elements. They are further subdivided as conifers and deciduous.

***Conifers*** are evergreen trees having pointed needle like leaves, e.g. deodar, chir, fir, kail, pine and larch. They show distinct annual rings, have straight fibres and are soft with pine as an exception, light in colour, resinous and light weight.

***Deciduous*** trees have flat board leaves, e.g. oak, teak, shishum, poplar and maple. The annual rings are indistinct with exception of poplar and bass wood, they yield hard wood and are non-resinous, dark in colour and heavy weight.

***Notes:*** **(i) Conifers, as compared to deciduous, are used predominantly for construction purposes for their long straight trunk and the better quality of wood.**

**(ii) Characteristic differences between soft woods and hard woods are given in Table 4.1.**

## 4.3 GROWTH OF TREES

In spring the roots of the tree suck sap as food from the soil which reaches the branches and the leaves. Sap contains moisture which gets evaporated. It absorbs carbon from air in presence of sunlight and becomes denser. In autumn, the sap descends and deposits in the form of a layer below the bark. This layer, referred to as the *cambium layer*, hardens and adds a layer of wood to the outside of tree every year in the form of concentric rings. These annual rings furnish valuable information regarding the age of the log, the rapidity and the uniformity of its growth.

**Table 4.1 Difference between Soft-wood and Hard-wood**

| *S.No.* | *Property* | *Soft wood* | *Hard wood* |
|---|---|---|---|
| 1. | Colour | Lighter | Darker |
| 2. | Growth | Faster | Slower |
| 3. | Weight | Lighter | Heavier |
| 4. | Density | Low | High |
| 5. | Annual rings | Distinct | Indistinct |
| 6. | Heart wood and sap wood | Cannot be distinguished | Can be distinguished |
| 7. | Strength | Strong along the grains | Strong along and across the grains |
| 8. | Conversion | Easy | Difficult |
| 9. | Resinous material | Exists in pores | Does not exist |
| 10. | Examples | Chir, fir and others conifers | Teak, sal, sheesham, and other deciduous trees |

Generally, the rings are widest at the centre and narrower nearer the bark. Also, the rings are widest at the bottom in young, thrifty trees and near the top in old ones. The cells formed in the cambium layer are primarily cellulose and are commonly referred to as *fibres* because of their needle-like shape. They are cemented into groups by lignin, which gives the strength to wood. The comparative width of annual rings, the direction and the arrangement of the cells and fibres are the causes of the grains of the wood. Rapidly growing trees having wide annual rings produce coarse grained wood, while those of slower growth produce wood with narrow rings or fine grain. The wood is said to be *straight-grained* when the wood elements are straight and run parallel to the pith and *cross-grained* when the elements do not run parallel to the axis. Cross-grain has a pronounced weakening effect on the strength of beams when the slope of the grains is 1:15 or greater.

Timber should be felled as soon as it is matured. The best time is midsummer or midwinter, when the sap is at rest. If it is felled, when the sap is vigorous in movement, the timber decays. If the tree is cut young, it yields soft wood and if it stands too long, the decay starts.

## 4.4 CLASSIFICATION OF TIMBER (IS: 399)

The terms timber and wood are often used synonymously, but they have distinct meanings in the building industry. Wood is the hard, fibrous material that makes up the tree under the bark, whereas timber may be defined as a wood which retains its natural physical structure and chemical composition and is suitable for various engineering works. Following is the classification of timber as per IS: 399, except the classification of timber based on grading which is given in IS: 6534.

### On the Basis of its Position

*Standing Timber* implies a living tree.

*Rough Timber* forms a part of the felled tree.

*Converted Timber or Lumber* are logs of timber sawn into planks, posts, etc.

### On the Basis of Grading (IS: 6534)

All grading specifications are clearly distinguished between *structural* or *stress* grading, and *commercial* or *utility* grading based on Indian Standard classification.

***Structural grading*** is also known as *stress* grading. However, there is a small distinction between the two. Structural grading refers to the principle by which the material is graded on the basis of visible defects which have known effects on the strength properties of the material. Stress grading refers to the principle by which the material is graded by consideration of maximum principle stresses to which it can be subjected.
Structural grading is further divided as:

1. Grading based on known effects of defects and estimating accumulative value.
2. Machine grading.

***Commercial grading*** also known as *yard* grading or *utility* grading refers to the principle by which the material is graded by consideration of usefulness of the material and price factors. Commercial grading is further divided in the following classes:

**Grade A:** This classification is based on dimensions and general appearance. The dimensions of lengths, widths and thicknesses of converted materials are measured. This system is prevalent is Kerala and Mysore.

**Grade B:** This classification is based on the best ultimate use of the material. Such a system is mostly in Andhra Pradesh and some parts of Tamil Nadu. Here, each grade is further divided into A, B and C classes to indicate occurrence of defects. Only two lengths are recognized, long (L) which is 5m and above, and short(S) that is under 5m. Each log is stamped such as BAL (Beam, A-class, long), PBS (Plank, B-class, short), etc. Some times another letter is also added indicating the species, e.g. T for teak.

**Grade C:** This classification is based on qualitative evaluation of defects and rough estimate of out-turn of utilizable material. It is prevalent in Madhya Pradesh.

**Grade D:** This classification is based on evaluation of units of defects and fixing the permissible number of standard volume of area or the material in each grade. This system is prevalent in Bombay region and is increasingly adopted in Indian Standards and is recognized internationally.

### On the Basis of Modulus of Elasticity

The species of timber recommended for constructional purpose are classified as

Group A: Modulus of elasticity in bending above 12.5 kN / mm$^2$
Group B: Modulus of elasticity in bending above 9.8 kN / mm$^2$ and below 12.5 kN / mm$^2$
Group C: Modulus of elasticity in bending above 5.6 kN / mm$^2$ and below 9.8 kN / mm$^2$

### On the Basis of Availability

According to availability, timber can be of three grades, namely X, Y and Z.

X—Most common, 1415 m$^3$ or more per year
Y—Common, 355 m$^3$ to 1415 m$^3$ per year
Z—Less common, below 355 m$^3$ per year

This is based upon the figures supplied by the forest departments.

### On the Basis of Durability

Test specimens of size 600 × 50 × 50 mm are buried in the ground to half their lengths. The condition of the specimen at various intervals of time are noted and from these observations their average life is calculated. Timbers are classified based upon such observations as of:

*High durability* average life of 120 months and over.

*Moderate durability* average life of less than 120 months but of 60 months or more.

*Low durability* average life of less than 60 months.

### On the Basis of Seasoning Characteristics

Timbers are classified depending upon their behaviour to cracking and splitting during normal air-seasoning practice under three categories.

*Highly refractory (Class A)* are slow and difficult to season-free from defects.

*Moderately refractory (Class B)* may be seasoned free from surface defects, etc. if some protection is given against rapid drying.

*Non-refractory (Class C):* These can be rapidly seasoned free from defects.

### On the Basis of Treatability

This classification is based upon the resistance offered by the heartwood of a species to preservatives under a working pressure of $1.05\ \text{N}/\text{mm}^2$ as

(a) Easily treatable.
(b) Treatable but complete preservation not easily obtained.
(c) Only partially treatable.
(d) Refractory to treatment.
(e) Very refractory to treatment, penetration of preservative being practically nil from the sides and ends.

## 4.5 STRUCTURE OF TIMBER

A tree can be divided into three portions, crown—composed of branches and leaves, trunk, and roots. The trunk accounts for about 80 per cent of the total bulk of wood.

Figure 4.1 shows the structure of well grown timber from trunk of the exogenous tree. The structure of timber visible to naked eye or at a small magnification is called *macro structure,* and that apparent only at great magnifications, the *micro structure.* Macro structure of the timber can be studied by cutting the trunk in three directions (Fig. 4.1 (a)). In the cross-sectional and radial ducts, the following main parts of a tree, e.g. bark, cambium, sap wood, heart wood and pith, become readily apparent (Fig. 4.1(b)). Each of the components has a specific function. The bark protects the wood against mechanical damage. Its inner layer, called bast conveys the nutrients from the crown downwards and stores them. The function of cambium is to grow wood cells on the inside and smaller bast cells on the outside. The sapwood assists in the life process of tree by storing up starch and conducting sap. The cells in the sap wood are active. The heart wood gives a strong and firm support to the tree. With the growth of tree, the cells in the inner older portion of trunk gradually become inactive and lifeless, but do not decay. This portion of the trunk is called heart wood. At the centre of the cross-section is the pith, a small area occupied by friable tissues consisting of thin walled, loosely connected cells called

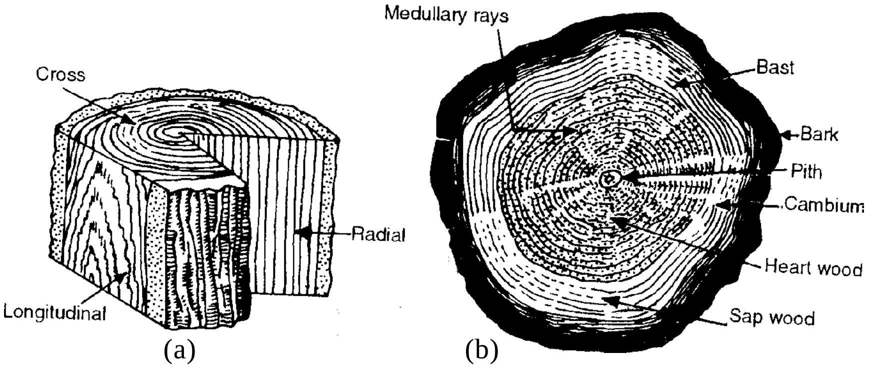

(a) (b)

Fig. 4.1 Cross Section of a Tree

pith. In a felled tree, it easily crumbles and rots. In the cross-sectional direction, nutrients pass from bast to the heart through groups of cells running at right angles to the cambium layers and are referred to as medullary rays.

## 4.6 CHARACTERISTICS OF GOOD TIMBER

The principal characteristics of timber of concern are strength, durability and finished appearance.

1. Narrow annual rings, closer the rings greater is the strength.
2. Compact medullary rays.
3. Dark colour.
4. Uniform texture.
5. Sweet smell and a shining fresh cut surface.
6. When struck sonorous sound is produced.
7. Free from the defects in timber.
8. Heavy weight.
9. No woolliness at fresh cut surface.

## 4.7 SEASONING OF TIMBER

Timber cut from freshly felled trees is too wet for normal use and is dimensionally unsuitable. Seasoning is the process of reducing the moisture content (drying) of timber in order to prevent the timber from possible fermentation and making it suitable for use. It can also be defined as the process of drying the wood to a moisture content approximately equal to the average humidity of the surroundings, where it is to be permanently fixed. Very rapid seasoning after removal of bark should be avoided since it causes case hardening and thus increases resistance to penetration of preservatives. Some of the objects of seasoning wood are as follows:

1. Reduce the shrinkage and warping after placement in structure.
2. Increase strength, durability and workability.
3. Reduce its tendency to split and decay.
4. Make it suitable for painting.
5. Reduce its weight.

### Methods of Seasoning

Timber can be seasoned naturally or artificially.

***Natural or Air Seasoning:*** The log of wood is sawn into planks of convenient sizes and stacked under a covered shed in cross-wise direction in alternate layers (Fig. 4.2) so as to permit free circulation of air. The duration for drying depends upon the type of wood and the size of planks. The rate of drying is however very slow. Air seasoning reduces the moisture content of the wood to 12–15 per cent. It is used very extensively in drying ties and the large size structural timbers.

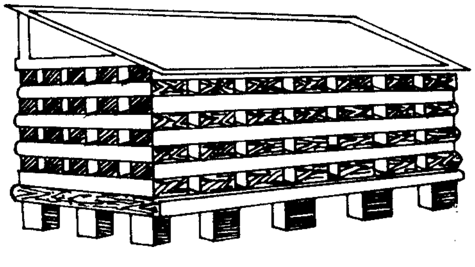

**Fig. 4.2 Shed for Air Seasoning of Timber**

***Artificial Seasoning:*** The prevalent methods of artificial seasoning are as follows:

***Water Seasoning:*** The logs of wood are kept completely immersed in running stream of water, with their larger ends pointing upstream. Consequently the sap, sugar, and gum are leached out and are replaced by water. The logs are then kept out in air to dry. It is a quick process but the elastic properties and strength of the wood are reduced.

***Boiling*** in water or exposing the wood to the action of steam spray is a very quick but expensive process of seasoning.

***Kiln Seasoning*** is adopted for rapid seasoning of timber on large scale to any moisture content. The scantlings are arranged for free circulation of heated air with some moisture or superheated steam. The circulating air takes up moisture required from wood and seasons it. Two types of kilns, the progressive (Fig. 4.3 (a)) and the compartment (Fig. 4.3 (b)) are in use. For most

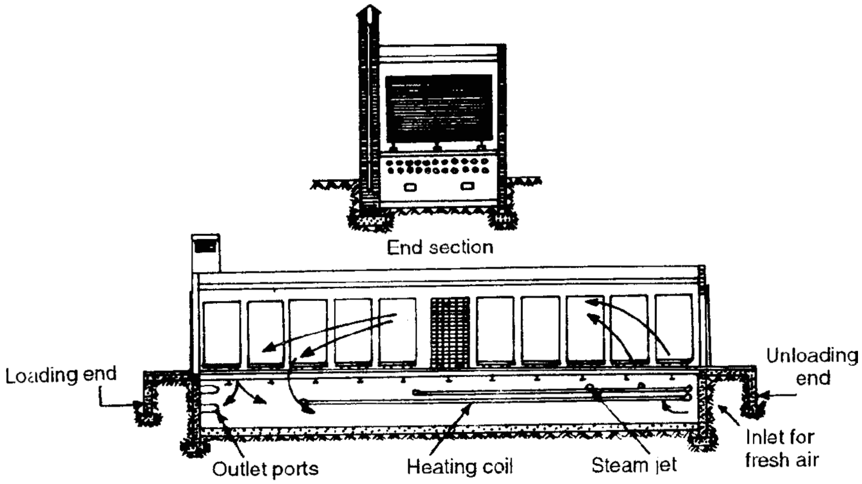

**Fig. 4.3(a) Progressive Kiln**

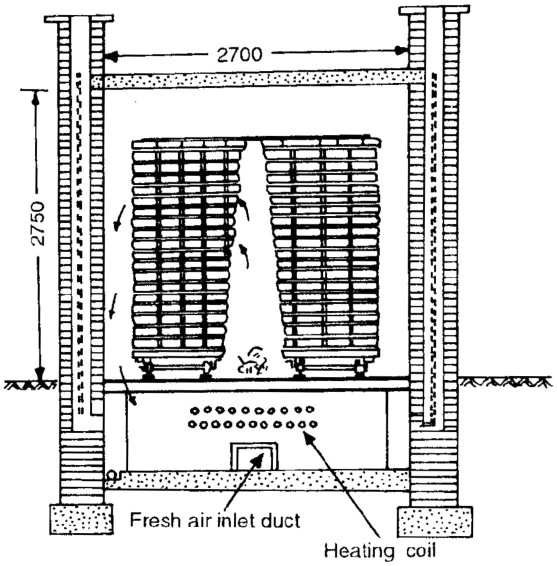

**Fig. 4.3(b) Compartment Kiln**

successful kiln-seasoning the timber should be brought to as high a temperature as it will stand without injury before drying is begun; otherwise the moisture in the hot outer fibers of the wood will tend to flow towards the cooler interior. With kiln drying there is a little loss in strength of timber, usually less than 10 per cent. Also, the wood is more thoroughly and evenly dried, thus reducing the hygroscopicity of the wood.

*Chemical or Salt Seasoning:* An aqueous solution of certain chemicals have lower vapour pressures than that of pure water. If the outer layers of timber are treated with such chemicals the vapour pressure will reduce and a vapour pressure gradient is setup. The interior of timber, containing no salts, retains its original vapour pressure and, therefore, tends to dry as rapidly as if there had been no treatment. The result is to flatten the moisture gradient curves, to reduce the slope of the curves, and consequently to reduce the internal stresses induced during drying. Since it is these stresses which are responsible for defects such as checks, etc. a chemically treated timber will exhibit fewer defects. Common salt or urea are generally used; the latter is preferred as the corrosive action of common salt is a drawback.

*Electric Seasoning:* The logs are placed in such a way that their two ends touch the electrodes. Current is passed through the setup, being a bad conductor, wood resists the flow of current, generating heat in the process, which results in its drying. The drawback is that the wood may split.

*Mc. Neill's Process* has no adverse effects; it is the best method although most expensive. The timber is stacked in a chamber with free air space (l/3rd of its capacity) and containing products of combustion of fuels in the fire place. The time required for complete seasoning is 15 to 60 days.

## 4.8 DEFECTS IN TIMBER

Defects can occur in timber at various stages, principally during the growing period and during the conversion and seasoning process. The defects in the wood as shown in Fig. 4.4 are due to irregularities in the character of grains. Defects affect the quality, reduce the quantity of useful wood, reduce the strength, spoil the appearance and favour its decay.

### *Defects due to Abnormal Growth*

Following are some of the important defects commonly found in wood due to abnormal growth or rupture of tissues due to natural forces.

***Checks*** is a longitudinal crack which is usually normal to the annual rings. These adversly affect the durability of timber because they readily admit moisture and air.

***Shakes*** are longitudinal separations in the wood between the annual rings. These lengthwise separations reduce the allowable shear strength without much effect on compressive and tensile values. The separations make the wood undesirable when appearance is important. Boths the shakes and checks if present near the neutral plane of a beam they may materially weaken its resistance to horisontal shear.

*Heart Shake* occurs due to shrinkage of heart wood, when tree is overmatured. Cracks start from pith and run towards sap wood. These are wider at centre and diminish outwards.

*Cup Shake* appears as curved split which partly or wholly separates annual rings from one another. It is caused due to excessive frost action on the sap present in the tree, especially when the tree is young.

*Star Shake* are radial splits or cracks wide at circumference and diminishing towards the centre of the tree. This defect may arise from severe frost and fierce heat of sun. Star shakes appear as the wood dries below the fibre saturation point. It is a senous fault leading to separated log when sawn.

***Note:*** **Shakes are most harmful to strength when they follow neutral plane of a beam or run diagonally across the tension side of it. In the first case, they weaken the resistance to horizontal shear, and in the second, they reduce the tensile strength.**

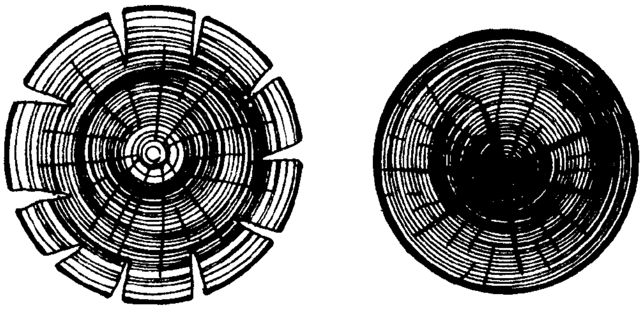

Star shake Heart shake

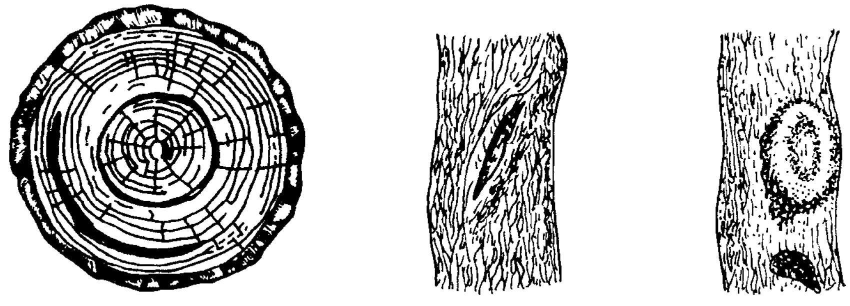

Cup shake Knots

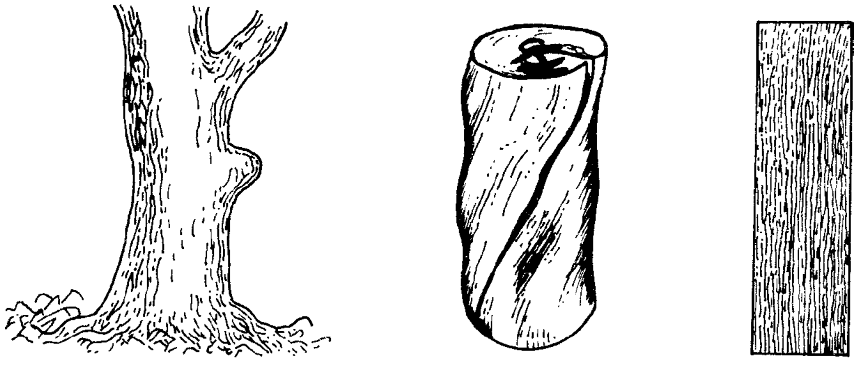

Rindgall Twisted fibres Upsets

**Fig. 4.4 Defects in Timber**

***Rindgall*** is characterised by swelling caused by the growth of layers of sapwood over wounds after the branch has been cut off in an irregular manner. The newly developed layers do not unite properly with the old rot, thereby leaving cavities, from where decay starts.

***Knots*** are bases of twigs or branches buried by cambial activity of the mother branch. The root of the branch is embedded in the stem, with the formation of annual rings at right angles to those of the stem. The knots interrupt the basic grain direction of the wood, resulting in a reduction of its strength. In addition these affect the appearance of the wood. A *dead knot* can be separated from the body of the wood, whereas *live knot* cannot be. Knots reduce the strength of the timber and affect workability and cleavability as fibres get curved. Knots are classified on the basis of size, form, quality and occurrence.

*Size* Pin knot (under 12 mm), small knot (12–20 mm), medium knot (20–40 mm) and large knot (over 40 mm).

*Form:* Round knot and spike knot (a round knot exposed by sawing lengthwise).

*Quality:* Sound knot—as hard and solid as the surrounding wood, decayed knot—contains advanced decay and is softer than the surrounding wood, encased knot—the annual rings fail to grow into the fibres of the surrounding wood, tight knot—a knot so securely fastened that it holds its position in the finished product.

*Occurrence:* Single knot—when wood fibres deflect around one knot, cluster knot—when wood fibres deflect about two or more knots as a unit and, branch knot—two or more knots radiating from a common centre.

***End Splits*** are caused by greater evaporation of sap at the end grains of log and can be reduced by painting the exposed end grains with a water proof paint or capping the exposed end with hoop iron bandage.

***Twisted Fibres*** are caused by wind constantly turning the trunk of young tree in one direction.

***Upsets*** are caused by the crushing of fibres running transversely during the growth of the tree due to strong winds and unskilled felling consequently resulting in discontinuity of fibres.

***Foxiness*** is a sign of decay appearing in the form of yellow or red tinge or discolouration of overmatured trees.

***Rupture*** is caused due to injury or impact.

### Defects due to Conversion

Conversion is the term used to describe the process whereby the felled tree is converted into marketable sizes of timber. Conversion defects are basically due to unsound practice in milling or attempts to economise during conversion of timber. A *wane* occurs in timber which contains, on one or more faces, part of the bark or the rounded periphery of the trunk. This reduces the cross sectional area, with consequent reduction in strength in the parts affected. Excessive slope of grains may also be classed as a conversion defect when conversion has not been done parallel to the axis of the trunk.

### Defects due to Seasoning

These defects are directly caused by the movement which occurs in timber due to changes in moisture content. Excessive or uneven drying, exposure to wind and rain, and poor stacking during seasoning can all produce distortions in timber. These defects result in loosening of fixings or disruption of decoration, or both. The common types of seasoning defects are:

checks—longitudinal separation of fibres not extending throughout the cross-section of wood; splitting—separation of fibres extending through a piece of timber from one face to another; warpage—consists of cupping, twisting and bowing.

## 4.9 DISEASES OF TIMBER

### Dry Rot

It is decomposition of felled timber caused by the action of various fungi. The fungus reduces fibres to fine powder as shown in Fig. 4.5 and the timber looses its strength. This disease is highly infectious and causes tremendous destruction. It occurs when the timber is imperfectly seasoned and placed in a moist, warm and confined atmosphere having no free access of air. Fungus rapidly dies when exposed to air or sunlight. The best remedy is to cut away the affected part and paint the remaining part.

***Note:*** **Fungi that attack growing trees and continue to damage it in structures are known as white or brown rot, white trunk rot, etc.**

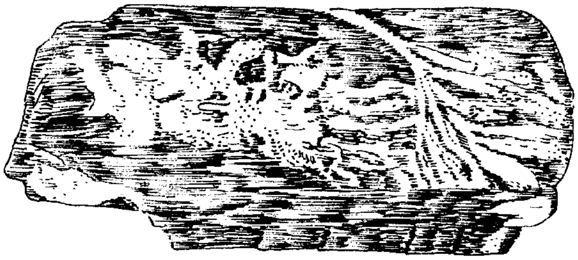

Fig. 4.5 Dry Rot

### Wet Rot

When timber is subjected to alternate wet and dry conditions, decomposition of tissues takes place. This is not caused by fungal attack. In a living tree, it is set up by the access of water through wounds in the bark and causes the decomposition of sap and fibres of the tree. This may also occur when timber is seasoned by exposing it to moisture. To avoid wet rot, well seasoned timber is used with preservatives and paints.

## 4.10 DECAY OF TIMBER

Timber does not deteriorate by natural, physical or chemical changes or by pure ageing. It is, however, affected by destructive elements, such as weathering, chemical attack, fungi, insects or rodents. The most crucial amongst these are fungi, insects and rodents and are described as follows.

### Decay due to Fungal and Bacterial Attack

Wood is essentially an organic substance, made up of a skeleton of cellulose impregnated with lignin. The organic substances are susceptible to attack by both bacteria and fungi. Bacteria are the smallest of living organism and do not cause any serious damage to timber, except for some discolourations. Fungi are a system of plant organism which live in and attack timber causing rot and decay.

The method by which bacteria decompose wood is probably similar in nature to a fungal attack. Fungi reproduce through minute particles called *spores*, millions of which are produced at the fruiting stage. These spores send out *mycelia*, which in turn destroy the wood tissue by secretions of solvent chemicals and enzymes. After a considerable proportion of the cell wall has been destroyed by mycelia, the wood becomes brittle and weak.

The basic requirements for the existence of fungi are moisture, suitable temperature and food supplies. The wood itself forms the food supply and optimum temperature conditions are in the range of 18°C to 30°C. Some fungi like *Merulius lacrymans* and *Poria incrassata* provide moisture by themselves and seem to thrive even in fairly dry wood leading to what is technically known as *dry rot*. The various symptoms of incipient decay are discolouration, abnormal mottled appearance, roughness of surface and presence of soft spots of intense discolouration.

***Control of Fungi and Bacterial Attack:*** One of the prime requirements in the control of fungal attack is the dryness of timber. The timber should not be subjected to alternate wet and dry conditions. When this is unavoidable, a proper preservative treatment should be made. Felled trees should be air-dried as rapidly as possible and sawn timber should be kiln-seasoned properly in accordance with good air-seasoning practice. Thereafter, they should be protected from rain and other sources of moisture. It should be ensured that adequate ventilation is there around the timber to prevent fungal attack. Also, no timber used in a structure should contain sapwood which is more susceptible to fungal attack because of the food supplies stored in its parenchyma.

### Damage due to Insects

***Termites:*** Termites, or *white ants* as they are inappropriately called, are the most destructive of all insect agencies. They are small, social insects which form vast colonies and possess differentiated casts to carry on specialized functions in the social structure. They completely excavate the wood at the centre leaving the outer shell intact. They also attack furniture and wood work in houses and railway sleepers, etc.

***Beetles*** are small insects and they cause rapid decay of timber by converting them into fine powder. Usually, the outer shell of timber remains intact and hence the timber looks sound from outside until it fails completely.

*Powder post Beetles (Family Lyctidae)* attack sapwood of hardwoods with large pores. The eggs are laid in the pores and the larva that comes out eats through the wood, leaving a very fine powder. Even seasoned timber containing sapwood is not immune to attack of these small beetles.

*Long-horn Beetles (Cerambycidae)* are 6 mm to 20 mm in size. They derive their name from long curved antennae. They normally do not attack seasoned wood and mainly thrive on timber in the forest yard. They can attack any type of wood, though they prefer sapwood. Their bore holes are elliptical in cross-section.

*Ambrosia Beetles or Pin hole Borers* are very common and attack structural timber, furniture and other wood work in house. They are less than 6 mm in size and attack both sapwood and heartwood. The larva bores tunnels through the wood which are filled with the characteristic oval-shape pellets.

*Furniture Beetles (Anobiidae)* are very common and attack structural timber, furniture and other wood works in houses. They are smaller than 6 mm in size and attack both sapwood and heartwood. The larva bores tunnels through the wood which are filled with the characteristic oval-shaped pellets.

*Death watch Beetles (Xestobium)* are somewhat larger than the previous one and the tunnels made by these are also bigger and filled with bun-shaped pellets. They normally attack timber infested with fungi or otherwise decayed.

***Carpenter ants*** are usually black in colour and vary in size within the same nest. Unlike termites, they do not eat wood but merely tunnel it out for habitation. Their food is largely nectar, honeydew, and other sweet substances. They normally attack slightly rotted or water-softened wood but may continue into wood which appears perfectly sound. Timbers are often riddled with galleries before the presence of ants is detected. The frass ejected from the workings is quite coarse and shredding.

***Control of Insects*** is much simpler than eradicating fungi. The tunnels made by the insects help in the deep penetration of toxic elements that are used to destroy them. Large scale fumigation is carried out using powerful hydrocyanic acid gas, but this method is not recommended as this gas is highly poisonous and dangerous. The use of creosote is also not desirable because of its odour and undesirable colour. A good insecticide which does not damage the paint or varnish and vapourises easily is yet to be found. The vapours should also not be dangerous to human beings. It is found that no insecticide can fulfill all these requirements in one application and periodic applications are required to be effective. The best alternative is common turpentine mixed with a small quantity of orthodichlorobenzene. This vapour is very deadly to insects and is not poisonous to human beings and animals.

### Damage due to Rodents

Although the domestic rodents do not destroy timber in the same sense as the organism so far considered, they are capable of penetrating both wood and concrete. The problem of rodents is more serious in food-handling establishments.

***Control of Rodents:*** The guiding principle is to close all openings or passages and making doors and windows capable of closure in a rat-tight manner by fixing metal sheets over the lower parts of doors.

## 4.11 PRESERVATION OF TIMBER (IS: 401)

The durability of wood is decidedly variable property. If well-seasoned and kept in a dry place, if immersed in water, or if buried in ground, wood often lasts for centuries. When, however, unprotected wood can easily decay by swelling (when it gets wet), fungi, insects, fire, etc. The rapidly with which it decays depends on external conditions, the species of the wood, its preliminary conditioning, and its structure. One of the basic approaches to protect it is to create conditions unfavourable to fungi. Low humidity, heat and water insulation, etc. help to maintain the timber dry and thus make it insusceptible to damage by fungi. Water absorption, decay and other undesirable effects can be minimized by coating the surface of wood with polymer films or drying oils, oil base paints, varnishes and synthetic enamels. Preservative treatment of timber is not supposed to improve its basic properties like mechanical, electrical, or chemical properties. Some of the methods used to poison the food supply to fungus are as below.

***Oil Type Preservatives (Type 1)*** applied over outside of exposed timber, give unpleasant smell and are not suitable when timber is to be painted. The types in use are creosote, carbolinium, solignum etc. with or without admixture with petroleum or suitable oils having a high boiling range.

***Organic Solvent Preservatives (Type 2):*** *(Preservatives Insoluble in Water)* consists of toxic chemical compounds, e.g. pentachlorophenol, benzene-hexa-chloride, dichlorodiphenyl trichloro-ethane (D.D.T) and copper naphthenate. These are dissolved in suitable organic solvents like naphtha, or in petroleum products such as kerosene, spirit, etc. The treated timber can be painted, waxed or polished.

*Acetic Anhydride Treatment* is used for protection of veneers, plywood and light lumbers against decay by acetylation. They are treated with acetic anhydride vapour, which minimises swelling and improves resistance to decay and attack by insects.

***Water Soluble Preservatives (Type 3)*** are odourless organic or inorganic salts and are adopted for inside locations only. If applied over outside surfaces, the salts can be leached by rainwater. Examples of leachable (3A-water soluble) type of preservatives are zinc chloride, boric acid (borax), etc. Zinc chloride, sodium fluoride and sodium-penta-chloro-phenate are toxic to fungi. These are expensive and odourless (except for sodium-penta-chloro-phenate). Benzene-hexa-chloride is used as spray against borers. Boric acid is used against Lyctus borers and to protect plywood in tea chests.

Some of the other water soluble preservatives are fixed (3B-water soluble) type and are as follows.

*Copper-chromate-arsenic composition* is made of three chemicals.

| | | |
|---|---|---|
| Arsenic-pentaoxide | $As_2O_5.2H_2O$ | 1 part |
| Copper sulphate | $CuSO_4.5H_2O$ | 3 parts |
| Sodium or potassium dichromate | $(Na\text{ or }K)_2\,Cr_2CO_7$ | 4 parts |

The preservative is in the form of a powder and is used with water. Six parts of this powder is mixed with 100 parts by weight of water. The solution is applied in two coats. The timber is then allowed to dry for six weeks. This treatment renders the timber immune to the attacks of white ants and is known as *AsCu treatment*.

*Acid-cupric-chromate composition*

| | |
|---|---|
| Chromic acid | 1.7 parts |
| Copper sulphate | 50 parts |
| Sodium dichromate | 48.3 parts |

*Chromate-zinc chloride composition*

| | |
|---|---|
| *Zinc* chloride | 1 part |
| Sodium or potassium dichromate | 1 part |

*Copper-chrome-boric composition*

| | |
|---|---|
| Boric acid | 1.5 parts |
| Copper sulphate | 3 parts |
| Sodium or potassium dichromate | 4 parts |

*Zinc-meta-arsenite composition*

| | |
|---|---|
| Arsenious trioxide | 3 parts |
| Zinc oxide | 2 parts |
| Acetic acid | Just to keep the above in solution under operating conditions |

*Zinc-chrome-boric composition*

| | |
|---|---|
| Boric acid | 1 part |
| Zinc chloride | 3 parts |
| Sodium dichromate | 4 parts |
| Water | 100 parts |

## Various Treatment Processes (IS: 401)

***Surface Application*** is done either by spraying, dipping or by brushing the preservative for a short period on thoroughly debarked timber. For the oil type preservatives, the moisture content in timber should not be more than 14 per cent. With water soluble preservatives, a moisture content of 20 to 30 per cent is permissible. At least two coats should be applied. The second and subsequent coats should not be applied until the first one has dried or soaked into the wood. Where possible, the treatment is done hot. Surface treatment is used mostly for treating timber at site and for retreatment of cut surfaces.

***Soaking Treatment*** consists in submerging debarked timber in the preservative solution for a sufficiently long period until the required absorption of the preservative is obtained. For dry vineers 15–30 minutes of soaking are enough.

***Hot and Cold Process*** ensures sterilisation against fungi and insects. The timber is submerged in the preservative solution. Which is then heated to about 90° to 95°C and maintained at this temperature for a suitable period depending on the charge. It is then allowed to cool until the required absorption is obtained. During the heating period, the air in the timber expands and is partially expelled. While cooling, the residual air in the timber contracts and creates a partial vacuum which causes the preservative to be sucked into the timber. Generally two baths are used, the first containing water where the hot treatment is given and the second the cold bath containing the preservatives into which the timber is transferred immediately after heating. This overcomes the danger of precipitation of chemicals at high temperatures. This arrangement also helps to make the process continuous in case the quantity of timber is large.

***Boucherie Process:*** Sapwood of almost all green timbers with the bark on and of bamboos in green condition, soon after felling, can be treated using any of the inorganic water soluble preservatives by this process. The log of wood attached to the hose pipe and connected to the reservoir containing preservative at an air pressure of 0.1–0.2 $N/mm^2$ on its surface is shown in Fig. 4.6. Due to hydrostatic pressure, the preservative displaces the sap in the wood. The treatment is stopped when the concentration of preservative at the lower end of the log is the same as that in the reservoir.

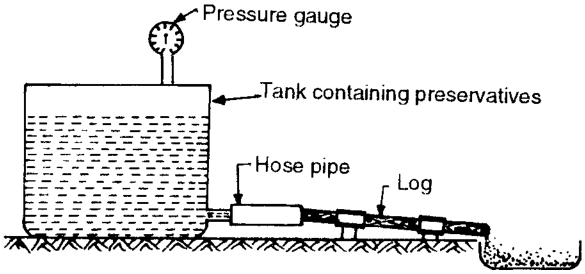

**Fig. 4.6 Boucherie Process**

***Full Cell or Bethel Process*** is essentially a pressure process and is used when maximum absorption of the preservative is desired. The timber charge is introduced into the cylinder. The door is tightly closed and then a vacuum of at least 560 mm of mercury is created and maintained for half an hour to remove as much air as possible from the wood cells. At the end of the vacuum period, the preservative is introduced into the cylinder, with the vacuum pump working. When the cylinder has been filled with the preservative, the vacuum pump is stopped and the cylinder is subjected to an antiseptic pressure of 0.35 to 1.25 N / $mm^2$ depending on the species, size, refractory nature of timber, etc. to inject the preservative into the timber. The pressure is held until the desired absorption is obtained. The preservative is then withdrawn from the cylinder and finally a vacuum of 380 to 560 mm of mercury for about 15 minutes is once again applied to free the timber from dripping preservative. Specified retention of toxic chemicals in the timber during the treatment can be had by a proper selection of the concentration of the toxic material in the treating solution. Desired absorption of the preservative solution is controlled by the duration of pressure and vacuum period.

***Empty Cell Processes*** are also known as *pressure processes* and are aimed at a maximum penetration of the preservative with a minimum net retention. The Lawry process and the Rueping process are commonly used.

*Lawry Process:* The cylinder is loaded with timber and closed, followed by filling with the preservative. An antiseptic pressure of 0.35 to 1.25 N / $mm^2$ depending on the timber species, size, etc. is applied until the required absorption is obtained. The pressure is released when a certain part of the preservative injected into the timber is expelled due to the expansion of the entrapped air in the cells. The cylinder is then drained off and finally, a vacuum is applied as described in full cell process.

*Rueping Process:* In this process, the cylinder is charged with timber and closed. An air pressure of 0.175 to 0.5 N / $mm^2$ is applied for a specified period depending upon the sapwood content of the timber and is maintained during the subsequent stage of filling up the cylinder with the preservative. When the cylinder is filled, an antiseptic pressure of 0.5 to 1.25 N / $mm^2$ depending on species, size, etc. is applied until the desired absorption is obtained. This is followed by a vacuum as described under full cell process. In this process, the preservative expelled on the release of the antiseptic pressure is considerable, yielding a low net absorption. This process is specially recommended for treating timber of mixed species and timbers containing sapwood and heartwood.

***Diffusion Process:*** The diffusion process is a method of treatment of timber (poles and planks) and other plant material like bamboos, canes, palm leaves, veneers etc., in green condition. It lends itself best in the case of timbers which are not easy to impregnate under pressure in dry condition, and also, where there is danger of timber getting deteriorated during seasoning, particularly if air-seasoning is adopted. It may be employed in any of the following manners:

(a) Momentary dipping in concentrated solution and then close stacking under cover. For refractory veneers over 1.6 mm, 15 minutes soaking and 1 to 2 hours stacking is necessary. It is essential that the glue used for subsequent bonding is compatible with the preservative.
(b) Prolonged immersion in dilute solution and then close stacking under cover.
(c) Application of a paste of the preservative over all the surfaces of the timber and then close stacking under cover. This is specially recommended for treatment of refractory species like fir generally used as railway sleepers.
(d) Injecting the paste into timber through incisions interspread on the surfaces of timber.

## 4.12 FIRE RESISTANCE OF TIMBER

Timber is very inflammable. The fire hazard of timber structures is, however, often overemphasized. When wood burns, the first step is the vapourisation of moisture (118°C) and the next is the volatilisation of extraneous materials (110–165°C). At temperatures (165–220°C) well below the ignition point, destructive distillation or decomposition begins with scorching and evolution of inflammable gases which ignite and form the first flames around the heated wood. As the temperature builds up, the evolution of gases is more rapid and the surface of the timber begins to char. Finally, the point is reached at which the wood itself begins to glow and to ignite (220–390°C). Until this point is reached, the woody portion does not support its own combustion. Quick ignition of inflammable gases and glowing of charcoal occur at about 390–530°C.

Fire proofing makes timber resistant to fire to a degree that it is difficult to ignite and support its own combustion. The fire resistance of wood can be enhanced either by impregnating it with chemicals like phosphates of ammonia, mixture of ammonium phosphate and ammonium sulphate, borax and boric acid, sodium arsenate, sodium tetra-borate or by designing wood to provide slow burning construction.

### Chemical Methods

These include the impregnation of timber with effective chemicals, or by coating the surface of timber with a layer of noncombustible paint.

*Impregnating with Chemicals:* As chemicals are water soluble, they are leached out due to rain when applied on exposed structures. Therefore, a second shallow impregnation with a fire-retardant, water-repellent sealer or paints like flamex and bitulac fire-retardant paint is applied which substantially retards leaching. Fire-retardant salts are impregnated by pressure process. Able’s process for making wood fire resistant is as follows:

The surface of wood is painted by a weak solution of sodium silicate. Thereafter slaked lime solution of the consistency of a paste is applied followed by the application of concentrated solution of sodium silicate in two coats, the second being applied after 6 hours of the first coat. The composition of the solution is:

| | |
|---|---|
| Sodium silicate | 56 g |
| Water | 50 g |
| Kaolin | 75 g |

*Surface Coating Method:* The most commonly used flame retardant coatings are cement grouts, clay-sulphate paste; paints such as silicate, chloride, phosphate paints and; emulsions like chloro paraffin. Some fire retardants (chemicals ) form a film on the surface of wood and decompose under heat yielding non-inflammable gases that dilute the inflammable gases and consequently retard the ignition of the latter. Some of the other fire retardants have low melting point. These melt under heat and form a barrier to the supply of oxygen to the inside.

### Structural Method

There is considerable difference between the burning of thin wooden members and that of large timbers. Timber of substantial dimension offers high resistance to fire. Heavy timber on burning form a protective coating of charcoal, which being a heat insulator retards the penetration of heat to the interior. On the contrary, thin members quickly reach the ignition point and burn rapidly. Once the fire is started, flames rise upward in case of wood and hence, wood which is in vertical direction catches fire easily. That is why windows and doors burn more rapidly as compared to beams and floors.

## 4.13 TESTING OF TIMBER (IS: 1708)

The evaluation of basic properties of timber, such as strength, density effect of various treatments on strength, etc. and the establishment of design functions for structural timber has been done on the basis of tests carried out on small clear specimens of timber. A clear specimen is one which is free from defects, such as knots and shakes. The comparison of strength properties of different timber species is also done on the basis of the tests carried out on the clear specimen. In the actual design of timber structures the effect of different kinds of defects on clear specimen is assessed and after making necessary allowance for the defects, the resultant values are used.

In order to obtain a good average figure, which is truly representative of the species, it is necessary to take samples from green timber as well as from seasoned timber and also sapwood, heartwood and from different parts of the same tree. For standard evaluation of physical and mechanical properties of a species from a locality, at least ten trees are chosen at random from the locality and sampling of material for different test is done.

### Specific Gravity Test

Almost all the mechanical properties of seasoned timber vary with moisture content and it is therefore necessary that the moisture content of the timber and its specific gravity be determined at the time of tests, preferably immediately after the tests.

Test specimens 50 × 50 mm in cross-section and 150 mm in length or 20 × 20 mm in cross-section and 60 mm in length are used to determine the sp. gr. of the wood. When rectangular specimens are not obtained, a specimen of about 10 cc volume may be used.

The specimen is weighed and its dimensions are measured. Then, volume is calculated by multiplying all the three dimensions. The volume of irregular specimen is determined by mercury volumeter. The level of mercury in the volumeter is raised to the given mark on the capillary tube and reading is noted. The level is then brought down and specimen is inserted in the volumeter. After raising the level to the given mark, the reading is taken again. Care is taken that no air bubble is entrapped in the volumeter. The difference of the two readings is the volume of the specimen.

Specific gravity is calculated as under:

$$\text{Specific gravity at test} = \frac{W_1}{V_1}$$

$$\text{Adjusted specific gravity} = \frac{W_1}{V_1} \times \frac{100}{100 + m}$$

Where $W_1$ = weight of test specimen
$V_1$ = volume of test specimen (mm$^3$)
$m$ = percentage moisture content of the test specimen

***Note:*** **If initial condition of the specimen is green (that is, well above the fibre saturation point) adjusted specific gravity is known as standard specific gravity; and if the specimen is dry, the specific gravity is called dry specific gravity. The weight (kg/m$^3$) at a given moisture content (*m*) = specific gravity at given moisture content (*m*) × 1000.**

## Volumetric Shrinkage Test

Volumetric shrinkage is determined on 50 × 50 × 150 mm or 20 × 20 × 60 mm specimen.

The specimen is weighed initially (usually green) and the volume determined. A suitable vessel, half filled with water, is kept on the pan of a weighing balance and weighed. The specimen is then completely dipped in water by means of a needle as shown in Fig. 4.7 and weighed again. The difference of the two readings is volume of the specimen.

The specimen is taken out of the water, wiped with dry cloth, end-coated by immersion in hot paraffin, allowed to air-season under room conditions and weighed periodically until moisture content of about 12 per cent is reached. The volume is determined again. The specimen is then kept in an oven at 103° ± 2°C until an approximately constant weight is reached. After oven-drying, the specimen is again weighed and, while still warm, is immersed in hot paraffin-wax bath, care being taken to remove it quickly to ensure only a thin coating. The volume of the paraffin-coated specimen is determined by immersion as before.

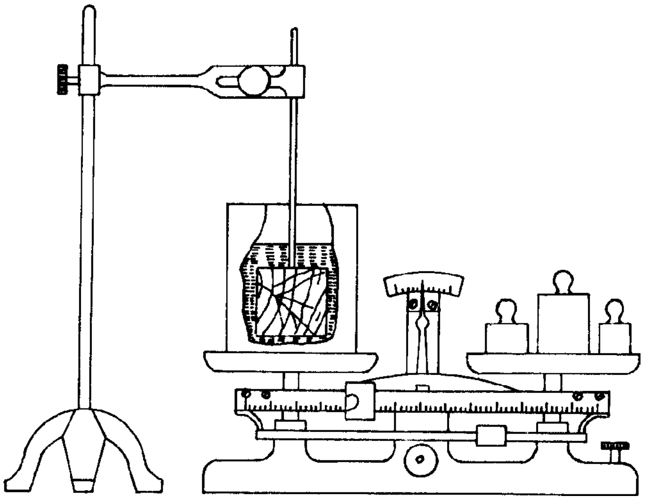

**Fig. 4.7 Apparatus for Determination of Volumetric Shrinkage**

Volumetric shrinkage form initial condition to required dry condition

$$= \frac{V_1 - V_r}{V_1} \times 100 \text{ per cent of volume in original condition}$$

$$\text{Moisture content, per cent} = \frac{W_r - W_0}{W_0} \times 100$$

The oven dry specific gravity = $W_0 / V_0$

where $W_1$ and $V_1$ = weight and volume at initial condition (usually green)

$W_r$ and $V_r$ = weight and volume at the initial required dry condition at *r* per cent moisture content (usually 12 per cent moisture content or oven dry condition)

$W_0$ and $V_0$ = weight and volume at the oven dry condition

## Radial and Tangential Shrinkage and Fibre Saturation Point Test

Test specimens of 20 × 20 × 50 mm sizes are cut truly radial or tangential as the case may be in lengthwise direction.

The specimen is weighed initially (usually green) and the length of the specimen is measured by means of a special screw gauge shown in Fig. 4.8. The specimens are allowed to air-season and periodically weighed and measured, until a uniform moisture content of nearly 12 per cent is reached. The specimens are then dried in an oven at 103° ± 2°C until an approximately constant weight is attained. Finally, the specimen is weighed and measured.

The radial and tangential shrinkage are calculated from the following formulae:

Shrinkage, $s$, tangential or radical from green to the required dry condition

$$= \frac{l_1 - l_r}{l_1} \times 100 \text{ per cent}$$

$$\text{Moisture content, } r\text{, per cent} = \frac{W_r - W_0}{W_0} \times 100 \text{ per cent}$$

where $W_1$ and $l_1$ = weight and length in the initial condition (usually green)
$W_r$ and $l_r$ = weight and length at $r$ per cent moisture content
$W_0$ = weight at oven dry condition

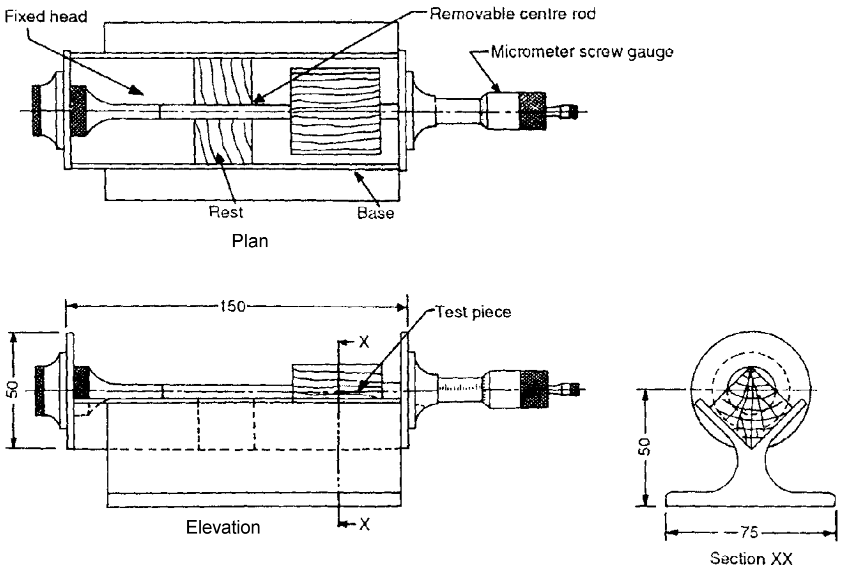

**Fig. 4.8 Apparatus for Radial and Tangential Shrinkage**

A graph is plotted with $r$ as the ordinate and $s$ as the abscissa. From this graph, the moisture content at which shrinkage commences appreciably is noted. This is known as $Y_0$ point. The average value of the $Y_0$ point in the radial and tangential cases is taken as fibre saturation point.

## Static Bending Strength Test

***One Point Loading Test:*** The specimen may be 50 × 50 × 750 mm or 20 × 20 × 300 mm. The test specimen is supported on the rig as shown in Fig. 4.9. The load is applied continuously at a constant rate of 2.5 mm per minute in case of 50 × 50 × 750 mm and 1.0 mm per minute in case of 20 × 20 × 300 mm.

Deflections of the neutral plane at the centre of the length are measured with respect to the points in the neutral plane above the supports. Deflections of the neutral axis are measured at the centre of the beam.

Deflection is measured at suitable load intervals such that about 8–10 readings are available up to limit of proportionality. Beyond the limit of proportionality up to maximum load or beyond maximum load the test is continued until a deflection of 150 mm for 750 mm and 60 mm for 300 mm specimens is reached or the specimen fails to support 1000 N for 50 × 50 × 750 mm or 200 N for 20 × 20 × 300 mm specimens, whichever is earlier.

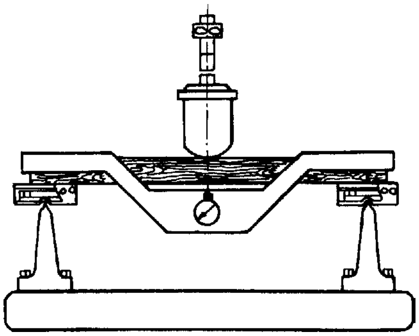

**Fig. 4.9 Static Bending Test Equipment**

The failure of the specimen is recorded according to its appearance and development as indicated in Fig. 4.10. The readings of deflections and the load recorded and a load-deflection curve is drawn. The various characteristics are determined by the following formulae and from the load-deflection curve. The area is measured by a calibrated planimeter.

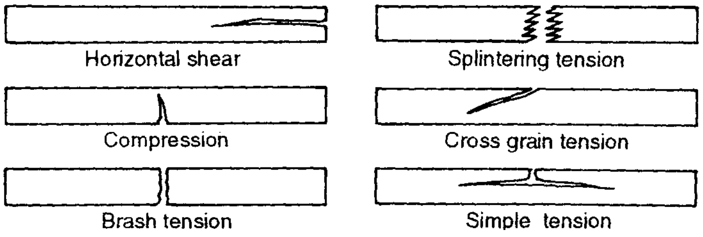

**Fig. 4.10 Failure of Timber Specimen Under Static Bending Test**

| *S. No.* | *Characteristic* | *Unit* | *Formula* |
|---|---|---|---|
| 1. | Fibre stress at limit of proportionality | N/mm$^2$ | $\frac{3Pl}{2bh^2}$ |
| 2. | Equivalent fibre stress at maximum load (modulus of rupture) | N/mm$^2$ | $\frac{3P'l}{2bh^2}$ |
| 3. | Modulus of elasticity | N/mm$^2$ | $\frac{Pl^3}{4\Delta\, bh^3}$ |
| 4. | Horizontal shear stress on neutral plane at limit of proportionality | N/mm$^2$ | $\frac{3P}{4bh}$ |
| 5. | Horizontal shear stress at maximum load | N/mm$^2$ | $\frac{3P'}{4bh}$ |
| 6. | Work to limit of proportionality (elastic resilience) | N mm/mm$^3$ | $\frac{CA}{lbh}$ |

| | | | |
|---|---|---|---|
| 7. | Work to maximum load | N mm/mm$^3$ | $\frac{CA'}{lbh}$ |
| 8. | Total work | N mm/mm$^3$ | $\frac{CA''}{lbh}$ |

where $P$ = load at the limit of proportionality, the point in load-deflection curve at which the graph deviates from the straight line.
$l$, $b$ and $h$ = the length width and height of the test specimen respectively
$P'$ = maximum load
$\Delta$ = deflection at the limit of proportionality
$C$ = area constant
$A$ = area of load-deflection curve up to limit of proportionality
$A'$ = area up to maximum load
$A''$ = area up to the final reading when total work is required

***Two-point Loading Test:*** The specimen may be 50 × 50 × 1000 mm or 20 × 20 × 400 mm. The distance between points of application of the load and the supports (Fig. 4.11) is 150 mm for 50 × 50 mm and 60 mm for 20 × 20 mm cross-sections. The load is applied at a constant rate of 3 mm per minute and 1.5 mm per minute in the two cases, respectively.

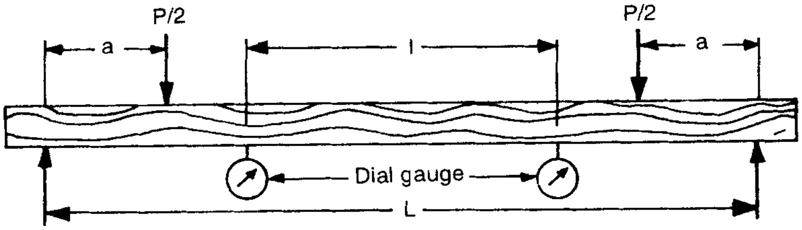

**Fig. 4.11 Two Point Load Test**

Deflection of neutral axis is measured at the mid span. The distance $L$ between these two points (also called as gauge length) is kept 400 mm and 160 mm for the two specimens respectively. The deflection is measured at suitable load intervals such that 8-10 readings are available up to limit of proportionality and continued up to maximum load. The failure of the specimen is recorded according to its appearance and development as indicated in Fig. 4.10. A graph is plotted with load as ordinate and deflection as abscissa and the limit of proportionality, that is, the point at which the curve deviates from straight line is evaluated. The various characteristics are determined by the following formulae:

| *S. No.* | *Characteristic* | *Unit* | *Formula* |
|---|---|---|---|
| 1. | Fibre stress at limit of proportionality | N/mm$^2$ | $\frac{3Pa}{bh^2}$ |
| 2. | Equivalent fibre stress at maximum load | N/mm$^2$ | $\frac{3P'a}{bh^2}$ |

| | | | |
|---|---|---|---|
| 3. | Modulus of elasticity | $N/mm^2$ | $\frac{3Pal^2}{4bh^3\Delta}$ |
| 4. | Horizontal shear stress on neutral plane at limit of proportionality | $N/mm^2$ | At centre = 0<br>At ends = $\frac{3P}{4\,bh}$ |
| 5. | Horizontal shear stress at maximum load | $N/mm^2$ | At centre = 0<br>At ends = $\frac{3P}{4\,bh}$ |
| 6. | Work to limit of proportionality (elastic resilience) | $Nmm/mm^3$ | $\frac{P\Delta}{2lbh}$ |

where $l$ = distance between two fixed points for which deflection is recorded in mm (gauge length).

## Impact Bending Strength Test

The specimen for impact bending test is same as that used for static bending strength test. The test is conducted on a suitable impact bending machine. The span is 700 mm in case of 50 × 50 × 750 mm and 280 mm in case of 20 × 20 × 300 mm specimens. The hammer is 25 kg and 1.5 kg for the two specimen sizes, respectively.

Static deflection $x$ due to the weight of the hammer is measured at the centre of the specimen. For recording of deflection, a drum is provided which can be brought in contact with a stylus attached to hammer and can be rotated on a vertical axis. On the drum, a paper is fixed by means of sticking tape, under which a carbon paper is placed inverted for recording the impressions. First, a datum line is marked by placing the hammer to rest on the specimen and rotating the drum with stylus touching it. After that, the hammer is dropped from different heights and deflection recorded on the paper fixed on the drum. The first drop of hammer is from a height of 50 mm after which the height of the successive drops is increased by 25 mm until a height of 250 mm is reached, and thereafter increment in height is 50 mm until complete failure occurs or 150 mm or 60 mm deflection is reached for the two sizes, respectively. Deflections due to successive drops are recorded. For this purpose, at the drop of the hammer, the drum is rotated as the hammer rebounds.

From the tracing on the drum, record the actual deflection at each drop (that is, the distance from the lowest point to the datum line). A graph is then plotted with the exact height of drop plus maximum deflection at that drop $H + (x + y)$ as the ordinate and $(y + x)^2$ as the abscissa. The point at which the curve deviates from a straight line is taken as limit of proportionality. The various characteristics should be determined by the following formulae:

| *S. No.* | *Characteristic* | *Unit* | *Formula* |
|---|---|---|---|
| 1. | Maximum height of drop | mm | $H$ |
| 2. | Height of drop at limit of proportionality | mm | $H'$ |
| 3. | Fibre stress at limit of proportionality | $N/mm^2$ | $\frac{3H'Wl}{bh^2\Delta}$ |

| | | | |
|---|---|---|---|
| 4. | Modulus of elasticity | $N/mm^2$ | $\frac{H'Wl^3}{2bh^3\Delta^2}$ |
| 5. | Work to limit of poroportionality | $N\,mm/mm^3$ | $\frac{H'W}{lbh}$ |

where $H$ = maximum height of drop under the given weight
$H'$ = height of drop at the limit of proportionality read from the curve (inclusive of deflection $x + y$)
$W$ = weight of the hammer
$l$ = span of the test specimen
$b$ = breadth of the test specimen
$h$ = depth of the test specimen
$\Delta$ = $(y + x)$ at limit of proportionality from the curve

## Compressive Strength Test

***Parallel to Grain:*** The specimen may be 50 × 50 × 200 mm or 20 × 20 × 80 mm. The load is applied continuously during the test at a constant rate of 0.6 mm per minute for both the sizes.

For 200 mm specimen a load of 2.5 kN is initially applied to set the specimen. Deformation under compression is then measured over a central gauge length of 150 mm. Where possible, direct points are obtained on a graph sheet. The reading is continued well beyond the proportional limit. The final reading at the maximum load is recorded. For 80 mm specimen, final reading of the maximum load only is recorded.

Compression failures are recorded according to the appearance of the fractured surface as shown in Fig. 4.12. In case two or more kinds of failures develop, they are described in the order of their occurrence (for example, shearing followed by crushing). The load deformation curves are drawn. Load and deformation at limit of proportionality are then read accordingly. the various characteristics are determined by the following formulae:

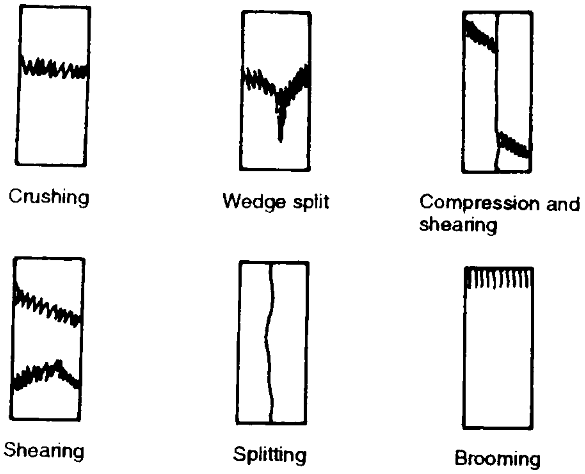

**Fig. 4.12 Failure of Timber Specimen Under Compression Parallel to Grain**

| *S. No.* | *Characteristic* | *Unit* | *Formula* |
|---|---|---|---|
| 1. | Compressive stress at limit of proportionality | $N/mm^2$ | $P/A$ |
| 2. | Compressive stress at maximum load | $N/mm^2$ | $P'/A$ |
| 3. | Modulus of elasticity in compression parallel to grain | $N/mm^2$ | $\frac{LP}{\Delta A}$ |

***Perpendicular to Grain:*** The specimen may be 50 × 50 × 150 mm or 20 × 20 × 100 mm. It should be free from defects and faces should approach closely to the true radial and tangential direction.

The load is applied to the radial surface continuously at a constant rate of 0.6 mm per minute for both the sizes.

A small load not more than 500 N on 150 mm and 100 N on 100 mm specimen is initially applied to set the specimen and the deformation is measured to obtain to 10 readings up to limit of proportionality and is continued up to a deformation of 2.5 mm. If maximum load is reached at some lesser value of compressive deformation, the same is recorded along with corresponding deformation. A curve between load and deformation is plotted. The load and deformation at limit of proportionality is then read. The load at 2.5 mm compression is also recorded. The various characteristics are determined by the following formulae:

| *S. No.* | *Characteristic* | *Unit* | *Formula* |
|---|---|---|---|
| 1. | Compressive stress at limit of proportionality | $N/mm^2$ | $P/A$ |
| 2. | Compressive stress at compression of 2.5 mm | $N/mm^2$ | $P'/A$ |
| 3. | Crushing strength at maximum load | $N/mm^2$ | $P_0/A$ |
| 4. | Modulus of elasticity in compression perpendicular to grain | $N/mm^2$ | $\frac{Ph}{A\Delta}$ |

where $P$ = load at the limit of proportionality
$A$ = cross-sectional area
$P'$ = at 2.5 mm compression
L = gauge length between compressometer points
$\Delta$ = deformation at the limit of proportionality
$P_0$ = maximum load if reached at a compression less than 2.5 mm
$h$ = height of the specimen

### Hardness Under Static Indentation Test

The specimens are same as that used in compressive strength test perpendicular to grain. The test is carried out on a suitable testing machine equipped with a special device for penetration into the specimen of a steel bar with hemispherical end or a ball of diameter 11.28 mm to a depth of 5.64 mm that is the projected area of greatest circle is 100 $mm^2$. The specimen is so placed on the machine that two penetrations are made on the radial face, two on the tangential face and one on each end in case of 50 × 50 × 150 mm size and for 20 × 20 × 100 mm size one penetration is made on tangential and one on radial face. The load is applied continuously at a constant rate of 6 mm per minute for both sizes.

The load required to penetrate the standard steel ball or hemispherical end of the steel bar (11.28 mm dia) to the specified depth of 5.64 mm is recorded for tangential, radial and end surfaces. Where two penetrations on one surface or one penetration on both ends have been made, the average value is taken. The average of radial and tangential hardness is denoted as side hardness.

### Shear Strength Test (Parallel to Grain)

The specimen may be 50 × 50 × 60 mm or 20 × 20 × 30 mm. They should be notched on one end as shown in Fig. 4.13 to produce shear failure on 50 × 50 mm or 20 × 20 mm surface in the radial or tangential plane. The test is carried on a suitable testing machine with the help of a shearing tool in rig. The direction of shearing should be parallel to the longitudinal direction. The load is applied continuously at a constant rate of 0.4 mm per minute. The maximum load required for shearing the area is recorded. The load divided by the area gives the maximum shearing stress in the concerned plane (radial or tangential) for both sizes.

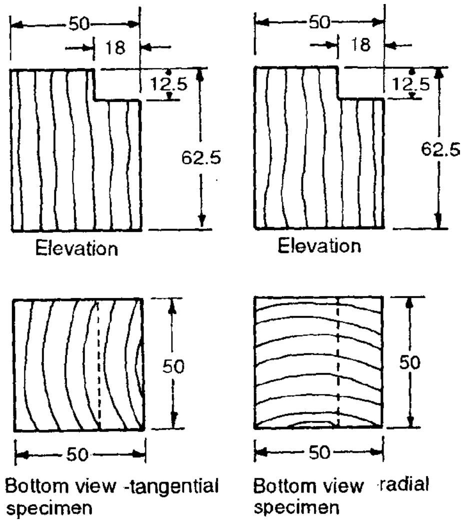

Fig. 4.13 Test Specimen for Shear Parallel to Grain

## Tensile Strength Test

***Parallel to Grain:*** The test specimen for the two sizes are shown in Fig. 4.14 (a, b). The cross-section of the central portion of the specimen should be 7 × 7 mm or 5 × 5 mm for the specimen in Fig. 4.14 (a) and Fig. 4.14 (b), respectively. The specimen is held firmly in the grips and the suitable elongation measuring device is attached to the gauge length. The load is applied continuously at a constant rate of one millimeter per minute for both sizes. Elongation is measured at suitable load intervals such that 8–10 reading are available up to limit of proportionality. Reading is continued well beyond the proportional limit and final reading of load at failure is recorded.

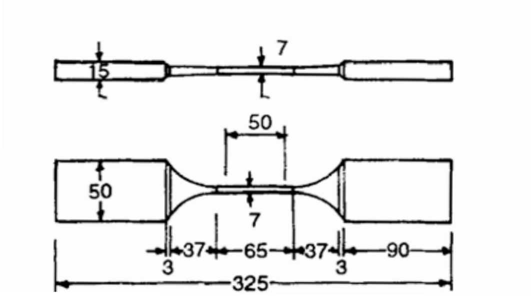

Fig. 4.14(a) Perpendicular to Grain

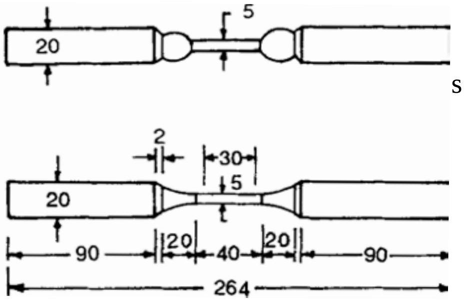

Fig. 414(b) Parallel to Grain

Load elongation curves are plotted. The load and elongation at proportional limit are then read. The various characteristics are determined by the following formulae:

| *S. No.* | *Characteristic* | *Unit* | *Formula* |
|---|---|---|---|
| 1. | Tensile stress at proportional limits | $N/mm^2$ | $\frac{P}{A}$ |
| 2. | Tensile stress at maximum load | $N/mm^2$ | $\frac{P'}{A}$ |
| 3. | Modulus of elasticity in tension parallel to grain | $N/mm^2$ | $\frac{LP}{\Delta A}$ |

where $P$ = load at the limit of proportionality
$A$ = cross-sectional area
$P'$ = maximum load to cause the failure of the specimen
$L$ = gauge length
$\Delta$ = deformation at the limit of proportionality.

***Perpendicular To Grain:*** The specimen for the two sizes are shown in Fig. 4.15 (a, b). The notches shown in Fig. 4.15 (a) and 4.15 (b) are so made as to produce a failure on 50 × 20 mm area (Fig. 4.15 (a)) or 20 × 10 mm area (Fig. 4.15 (b)) in the radial or tangential surface as desired. The test is conducted on a testing machine provided with suitable grips to hold the specimen. The load is applied continuously at a constant rate of 2.5 mm per minute until the maximum load is reached for both sizes.

The maximum load required for failure in the case of perpendicular to grain is recorded. The load divided by the area gives the maximum tensile stress perpendicular to grain in the concerned plane (radial or tangential).

## Cleavage Strength Test (Parallel to Grain)

The test specimens for the two sizes are shown in Figs. 4.16(a) and 4.16(b). The notches shown in Figs. 4.16 (a) and 4.16 (b) should be such as to fail the specimen in radial or tangential surface as desired. The load is applied continuously at a constant rate of 2.5 mm per minute until the maximum load is reached for both sizes. The maximum load required for failure is recorded. The load divided by the width gives the maximum cleavage resistance N / mm in the concerned plane (radial or tangential).

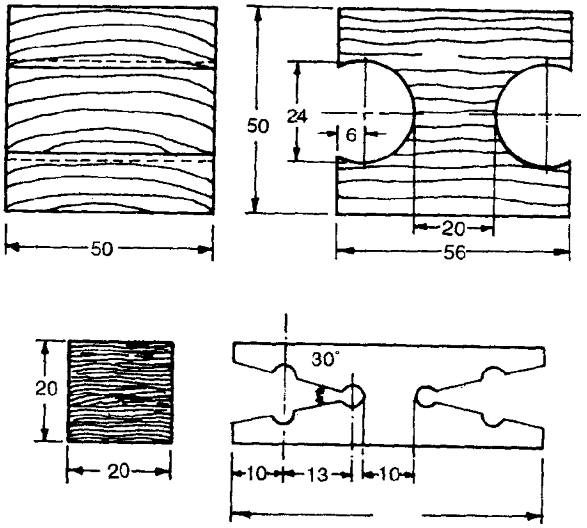

Fig. 4.15 Test Specimen for Tension Perpendicular to Grain

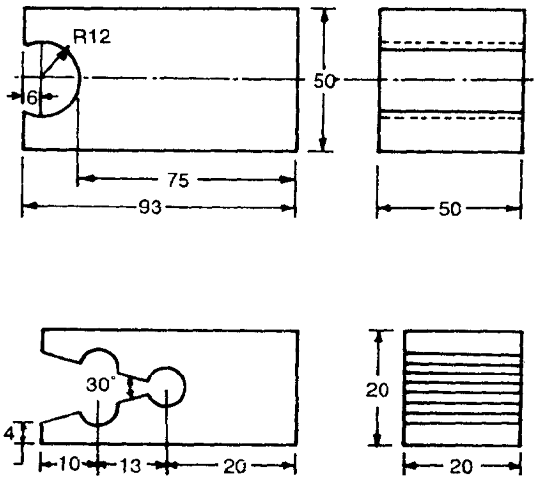

Fig. 4.16 Test Specimen for Cleavage

## Brittleness Test

***Izod Impact Test:*** The test specimen is 20 × 20 mm in cross-section and 125 mm in length. A saw notch 2 mm in width and 7 mm in depth is made on the radial face of the specimen at a distance of 50 mm from one end so as to produce maximum concentration of impact stress on the cross-section of 20 × 13 mm as shown in Fig. 4.17. The specimen is held vertical tightly clamped as a cantilever in a swinging pendulum machine such that 50 mm length of the specimen is under the clamp. The machine should have a calibrated dial so as to give direct reading of energy absorbed in breaking the specimen in a single blow. The specimen is so clamped that the blow is given in the radial face on the side of notch. The pendulum of the machine is so adjusted that on release from the initial position it may strike the specimen at the lowest point of swing (horizontally) at a distance of 10 mm from the upper end. The impact blow is given by releasing the pendulum and the reading on calibrated dial in N mm is recorded.

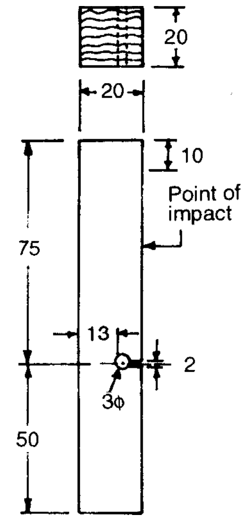

**Fig. 4.17 Test Specimen for Brittleness (Izod Impact)**

***Charpy Impact Test:*** The specimen is 12.5 × 12.5 mm in cross-section and 125 mm in length with the notch at the centre on the radial face. The notch should be *V* type, 2.5 mm in depth and 5 mm in width as shown in Fig. 4.18 so as to produce maximum concentration of impact stress in a cross-section of 12.5 × 10 mm. The specimen is freely supported horizontally with the notch vertical on the base of a swinging pendulum machine up to 10 mm on both ends. The machine should have a calibrated dial so as to give direct reading of energy absorbed in breaking specimen on a single blow. The blow is given on the opposite side of the notch at the centre of specimen. The pendulum of the machine is so arranged that on release from the initial position may strike the specimen at the lowest point of blowing (horizontally). The impact blow is given by releasing the pendulum and the reading on calibrated dial in N mm is recorded.

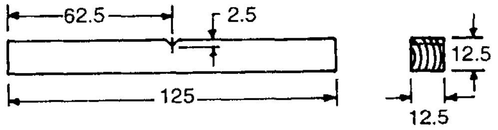

**Fig. 4.18 Test Specimen for Brittleness (Charpy Test)**

## Torsional Strength Test

The dimensions of the cylindrical specimens are shown in Fig. 4.19. The central cylinder should be 220 mm in length for both sizes but the radii should be 25 mm and 12 mm, respectively. The end portion for holding the specimen should be 30 mm and 15 mm, respectively and 40 mm in length for both the sizes. The test is conducted on a torsion testing machine provided with suitable types of grips to hold the specimen during test firmly on one end and free to rotate at the other end. The specimen is mounted on the machine and the strain (angular twist) measuring device is attached to the specimen at the centre on a gauge length of 150 mm. The torque is applied gradually by turning wheel of the machine at a uniform rate so as to produce a torque of about 5000 N mm per minute. Angular twist is measured in radians or degrees on the specified gauge length of 150 mm at regular intervals of torque such that 8 to 10 readings are available upto the limit of proportionality. Readings are continued well beyond the proportional limit and final reading of torque at failure are recorded. The torque-twist curve is drawn. The torque and angular twist at proportional reading limit is read from the curve. The various characteristics are determined by the following formulae:

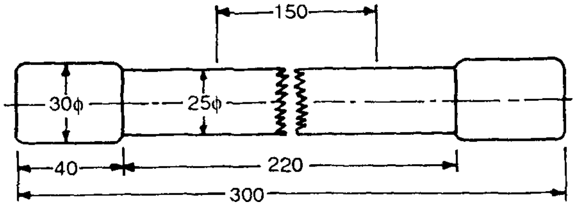

Fig. 4.19 Test Piece for Torsion

| S. No. | Characteristic | Unit | Formula |
|---|---|---|---|
| 1. | Torsion shear stress at proportional limit | $N/mm^2$ | $\frac{2M}{\pi r^3}$ |
| 2. | Torsion shear stress at maximum torque | $N/mm^2$ | $\frac{2M'}{\pi r^3}$ |
| 3. | Torsion modulus of rigidity | $N/mm^2$ | $\frac{2ML}{\pi r^4}$ |

where $M$ = torque at the limit of proportionality
$r$ = radius of the portion of the specimen under gauge
$M'$ = maximum torque
$L$ = gauge length
$\pi$ = the angular twist of one end relative to other end at a distance of $L$

## Moisture Content Test

The moisture content of timber and products made of it can be determined by any of the following methods.

***Oven-drying Method*** is most reliable, except where certain timber species containing volatile oils (like deodar) are involved. The method is, however, time consuming and requires cutting of the timber to be tested. Test specimens consisting of a cross-section, 15 to 20 mm long in the direction of the grain, free from all defects, are cut from each sample.

Immediately after each test specimen is cut and loose splinters and saw dust are removed by brushing or scraping, it is weighed. The weighed test specimens are completely ovendried at 103 ± 2°C for 12–18 hours. The oven-dry mass of all the test specimens, is now determined directly after removing from the oven, or after cooling them in desiccators to near room temperature. In case, cutting of specimen from the selected samples is not possible, the moisture content in the whole sample may be determined by collecting borings to a depth of half the thickness of each sample (obtained by means of an auger) in preweighed weighing bottles. The moisture content of each sample is determined by the following formula:

$$M = \frac{W_1 - W_0}{W_0} \times 100$$

The average of moisture content of all the samples from the lot tested is reported correct to the nearest whole number by the following formula for checking confirmity of a lot to the requirements of the relevant specification:

$$\overline{M} = \frac{\sum_{i}^{n} M}{n}$$

where $W_1$ = initial mass of test specimen
$W_0$ = oven-dry mass of test specimen
$\overline{M}$ = average moisture content (per cent)
$M$ = moisture content of individual samples (per cent)
$n$ = number of samples selected from the lot

***Electrical Moisture Meter Method*** is a direct, quick, convenient and non-destructive means of determining moisture content of timber and its products. These are of special value in field inspections and for checking of finished timber products. Because of the rapid measurements, and no loss of material by this method, more extensive checking is possible than permitted by the oven-drying method. Resistance type meters with electrode pins of suitable lengths and with species correction and temperature correction charts for the species to be tested are used. The meter readings are taken at three sections along the length in the middle width of each face of every sample. Two sectors are measured at a distance of 450 mm from the ends and the third one at mid length of the sample. If the length of the sample is 1 m or less, readings are made at mid length only on each face. Electrode pins of adequate length are selected for the thickness of timber under test, that is, to probe up to a depth not less than one-fifth the thickness of timber but preferably up to half the thickness. Readings at the various depths into the section are first taken on a few samples to ascertain the presence of large moisture gradients or a wet core (moisture content 20 per cent or above) or a reverse moisture gradient (surface wetter than the core). Moisture gradients are considered to be large if the difference of readings at one-fifth and half the thickness of a sample exceeds four per cent absolute in timber up to 40 mm thick and seven per cent absolute in timber 40 to 65 mm thick. If presence of the condition detailed is confirmed, the meter readings cannot be taken as reliable estimates of the average moisture content in the whole section, but only of the maximum moisture content prevailing within the depth of insertion of pins in case of meters provided with naked pin electrodes, or of the spot moisture content prevailing at the depth of insertion in case of meters provided with insulated pin electrodes. If presence of the conditions detailed is negated, readings at one-fifth thickness are taken as representative of the average in the whole section.

The average moisture content of each sample is calculated as:

$$M = \frac{\sum_{1}^{n} m}{P} \times 100$$

where $M$ = average moisture content of sample (per cent)
$m$ = corrected moisture meter reading in any sector of sample (per cent)
$P$ = number of sectors measure

The average of moisture content of all samples tested from a lot is calculated by the formula for checking conformity of a lot to the requirements of the relevant specification:

$$\overline{M} = \frac{\sum_{1}^{P} m}{n} \times 100$$

where $\overline{M}$ = average moisture content (per cent)
$m$ = moisture contents of individual samples (per cent)
$n$ = number of samples selected from the lot

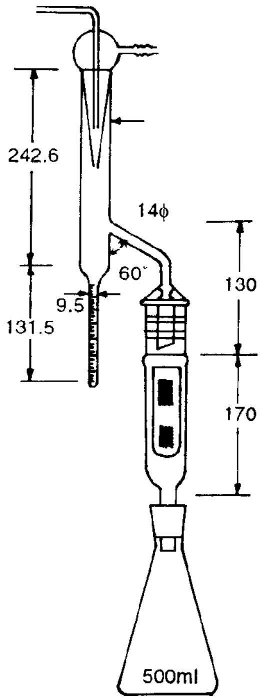

**Fig. 4.20 Distillation Apparatus**

***Distillation Method:*** This method is used for species like deodar containing volatile oil or extractives. It is also used for timber impregnated with volatile or non-volatile chemicals that are likely to interfere with the correct determination of moisture content by oven-drying or electrical moisture meter methods.

The apparatus for the test consists of distillation flask with indirect heating arrangement, cold water-cooled condenser of the cold finger type (Fig. 4.20), water trap, scales of accuracy 10 mg, and scalable weighing bottles.

About 50 g of each test sample is distilled till no more water collects in the water trap. Any water condensed elsewhere in the trap is washed down into the trap with the help of a solvent spray. Sufficient time is allowed for a clear separation of water and solvent (xylene or toluene) in the trap. Any bubbles inside the water collected in the trap are removed by tapping it. The moisture content of each sample is calculated by the following formula:

$$M = \frac{M_W}{M_1 - M_W} \times 100$$

where $M$ = moisture content
$M_1$ = mass of test specimen before distillation
$M_W$ = mass of water

## 4.14 SUITABILITY OF TIMBER FOR SPECIFIC USES

The characteristics and suitability of timbers are given in Table 4.2.

**Table 4.2 Characteristics and Uses of Timber from Various Trees**

| *S. No.* | *Purpose* | *Requirements* | *Nature of tree* |
|---|---|---|---|
| 1. | Agricultural implements | 1. Hard and durable<br>2. Should take good polish | Bel, Arjun, Babul, Black wood |
| 2. | Houses | 1. Sufficiently close grained<br>2. Takes good polish<br>3. Toughness and durability<br>4. Pleasing colour<br>5. Easy to work with | Sissoo, Teak, Ablus, Babul Haritaki, Jiyal, Kath bel, Mahua, Nirmali, Red wood, Walnut |
| 3. | Bridge | 1. Strength, hardness<br>2. Resistance to salt water action<br>3. Durability in moist places and under water | Babul, Red cedar, Iron wood, Jarul, Nageshwar, Sal, Satin, Sissoo |
| 4. | Carts and wheels | 1. Hardness and durability<br>2. Close grained | Jiyal, Arjun, Babul, Tamarind |
| 5. | Columns, beams door frames, etc. | 1. Hardness and durability<br>2. Should take good polish<br>3. Flexibility<br>4. Light in weight<br>5. Easy to work<br>6. Lasts under water | Arjun, Gamhar, Bamboo, Coconut, Palm<br>Mango, Pial, Palm |
| 6. | Furniture | 1. Light, soft and durable<br>2. Should take good polish<br>3. Close grained<br>4. Easy to work with | Teak, Champa, Deodar, Rakta-ghandan, Walnut, Shishum |
| 7. | Fancy goods and toys | 1. Easily workable<br>2. Strength and durability<br>3. Fairly hard and light weight<br>4. Scented | Simul, Sandal, Bamboo, Mahogany |
| 8. | Music instruments | 1. Pleasing brick red colour<br>2. Soft and easy to work<br>3. Beautiful motteling | Toon, Walnut |
| 9. | Scientific instruments | 1. Moderately hard and tough<br>2. Light<br>3. Easy to work with | Guava |
| 10. | Packing boxes | 1. Soft and light in weight<br>2. Lasts under water<br>3. Cheap | Simul, Mango, Deodar |
| 11. | Pegs | 1. Hardness and durability<br>2. Cheap | Arjun, Coconut, Palm, Kher |
| 12. | Piles | 1. Strength, hardness and durability<br>2. Close grains<br>3. Durable in moist places and under water | Red cedar, Sissoo, Sal, Nageswar, Iron wood |
| 13. | Railway carriage | 1. Close grains, hardness and durability<br>2. Should take good polish | Black wood, Teak, Iron wood, Red wood |

*(Contd)*

**Table 4.2** *(Contd)*

| *S. No.* | *Purpose* | *Requirements* | *Nature of tree* |
|---|---|---|---|
| 14. | Railway sleepers | 1. Hardness, toughness and strength<br>2. Durability under moist conditions<br>3. Close grains | Sundari, Red cedar, Sal, Kath bel, Deodar |
| 15. | Scaffolding | 1. Strength and durability<br>2. Flexible<br>3. Easy to work | Bamboo |
| 16. | Shuttering | 1. Hardness and durability<br>2. Easy to work<br>3. Durability in moist conditions | Nageshwar, Gamhar, Haritaki |
| 17. | Ships, Boats | 1. Hardness, toughness and strength<br>2. Durability under salty water | Jarul, Babul, Teak, Nageshwar, Bakul, Mahua, Khair |
| 18. | Well curbs | 1. Lasts long under water<br>2. Softness and light weight<br>3. Easy to work | Red cedar, Palm, Banyan, Babul, Gamhar, Mango |
| 19. | Match Box | 1. Moderately hard or soft | Kail, Simul |

## 4.15 PROPERTIES OF WOOD

### Physical Properties

***Density and Specific weight:*** All the mechanical properties of clear wood are related to its density, which varies directly with the apparent specific gravity. The true specific gravity of wood is approximately equal for all species and averages 1.54, whereas the specific weight and apparent specific gravity vary with density of wood. The percentage of moisture in the wood has a very large effect upon the specific weight and hence true comparisons of this property can only be made on dry specimens.

**Note: Since wood in the lower part of the trunk of a tree is more dense than that higher up, and since the densest wood at any given height is situated between the pith and middle ring of the cross section, a small variation in the strength of wood due to the position in the tree will be found.**

***Bulk density*** depends on the volume of pores and moisture content of the wood. For most wood species, the bulk density is less than density. Bulk density value is used to determine the quality factor which is the ratio of compressive strength to the bulk density. It is 0.6 for pine and 0.57 for oak.

***Moisture movement:*** Water is found in three portions of wood: (1) it constitutes over 90 per cent of the protoplasm in the living cells; (2) it saturates the cell walls; (3) it fills, more or less completely, the pores of the life less cells. Timber is liable to shrink or swell with the movement of moisture. This movement is not the same in all the directions. Fig. 4.21 shows two pieces A and B cut from a log. In piece A, the layers producing the annual rings run roughly parallel to the face of the timber, while in piece B, they run roughly at right angles to the face. Movement of the wood due to variations in moisture content is greatest in the plane of the annual rings. The movement $a_1$ will be greater than movement b. Also, as $a_2$ is nearer to the condition of b, it will move rather less than $a_1$. It is clear, therefore, that if a piece of timber is to be used as a board or panel, it will move less if cut like B than like A. It should also be obvious that the slightly varying tendency to movements on the faces of piece may lead to stresses which will cause it to warp. Recommended moisture content for structural elements is 12–20 per cent for doors and 10–16 per cent for windows.

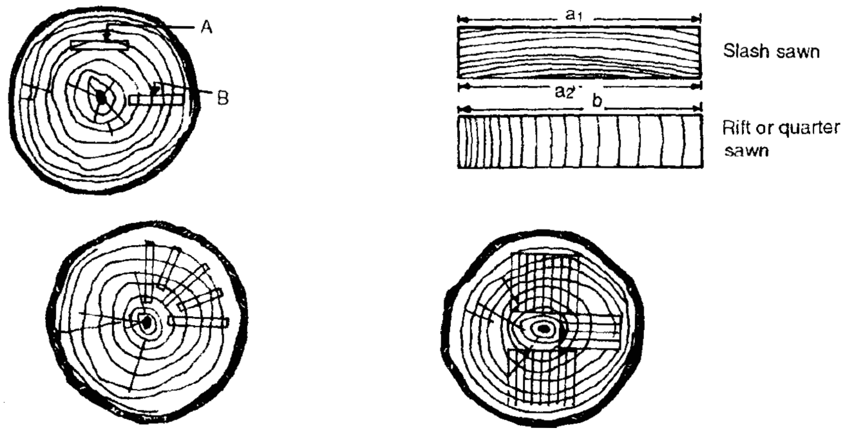

Fig. 4.21 Methods of Converting Timber

***Shrinkage*** is the reduction in linear and volumetric dimensions in drying of wood. Evaporation of capillary water is not accompanied by shrinkage, the latter taking place only when hygroscopic moisture evaporates. Because of structural non-uniformity, wood shrinks or swells irregularly in various directions. Linear shrinkage along the fibres lies between 0.1 and 0.3 per cent, in radial direction between 3 and 6 per cent and in tangential direction between 7 and 12 per cent. In general, the radial shrinkage of wood is 60 percent of the tangential, and the longitudinal shrinkage is negligible. Therefore, the volumetric shrinkage is practically 1.6 times the tangential shrinkage.

***Swelling*** is the capacity of wood to increase both its linear and volumetric dimensions when it absorbs water. Swelling of wood along the length of fibres ranges from 0.1 to 0.8 per cent, 3 to 5 per cent in the radial direction and 6 to 12 per cent in the tangential direction.

***Heat Conductivity*** is quite low. The coefficient of heat conductivity along the fibres is 1.8 times greater than that across the fibres and averages 0.15 to 0.27 K cal / mh°C. As the bulk density of wood increases and its moisture content decreases, the amount of air entrapped inside cavities decreases, the effect being greater heat conductivity of wood.

***Sound Conductivity***: The velocity of sound in wood is 2 to 17 times greater than that in air and as such wood may be considered to have high sound conductivity.

***Resistance to Action of Acids and Alkalis:*** Wood is not affected by weak alkali solution but decays in an acid medium ($pH < 4$).

## Mechanical Properties

Engineers, architects and carpenters must be well versed with the mechanical properties of timber. In order that the engineer may properly design columns and beams for various parts of wooden structures, he must be thoroughly conversant with the strength and stiffness of the available classes of timber. He must also know how various defects and conditions influence these properties. The architect must not only appreciates the beauty of various species, the relative ease with which each may be worked, the tendency to shrink, warp, and check; but he must likewise be prepared to proportion joints and rafters to carry the imposed loads without excessive deflection. The wheelwright must understand how the toughness and strength of his axles, spokes, and shafts are influenced by species, rate of growth, density, and defects. The carpenter and the craftsman must also have knowledge of the mechanical properties of wood in order that they may woork it to best advantage. The mechanical properties of timber that need elaboration are as follows.

## Stress-strain Relationship

Wood has three principal axes—longitudinal, radial and tangential— along which properties are fairly constant. Since wood is a nonistropic material, it has three values of modulus of elasticity varying by as much as 150 to 1, three shear moduli varying by 20 to 1, and six Poisson's ratios varying by 40 to 1. There is no sharply defined elastic limit in wood but there is a proportional limit. However, the stress-strain diagram in any direction is fairly straight over a considerable range before it gradually curves off. It is a ductile material.

The relative stress-strain curves for direct tension, direct compression and bending stress intensities parallel to the grain in Fig. 4.22 show that in both, direct compression and bending, the proportional limit is in the vicinity of 65 to 75 per cent of the ultimate strength. For all practical purposes, there is no proportional limit in direct tension.

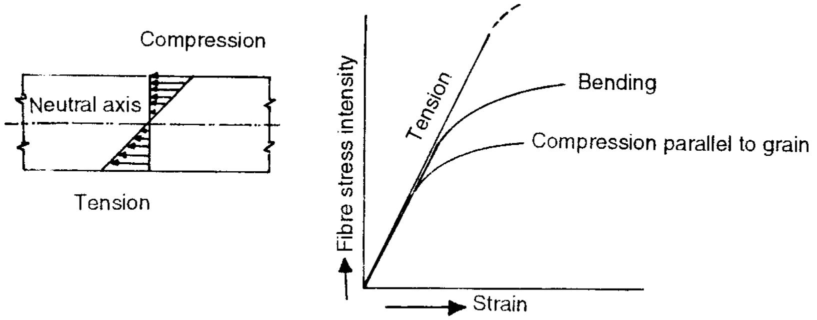

**Fig. 4.22 Stress Strain Curves Parallel to the Grain**

Modulus of elasticity of the grain is practically the same in direct tension, direct compression and bending, if shear deformation in bending is eliminated. Becaus modulus of rigidity of wood is low (approximately 1/15 to 1/20 the modulus of elasticity), the apparent bending modulus of elasticity varies somewhat with the type of loading and span, but in no case it is less than 90 to 95 per cent of the true bending modulus of elasticity. The mechanical properties of timber that need elaboration are as follows.

***Compressive strength:*** When subjected to compressive force acting parallel to the axis of growth, wood is found to be one of the strongest structural material. Columns and posts are, therefore, often fashioned of it. However, compressive strength perpendicular to fibres of wood is much lower than that parallel to fibres of wood. Compressive strength parallel to fibres, at 15 per cent moisture content, varies from 30.0 to 77.5 N / mm$^2$. Furthermore, a knowledge of the compressive strength is of value in estimating strength in bending since experiments have demonstrated that the yield point of wooden beams is determined by the compressive strength of the wood.

When wood is subjected to compression parallel to the grain, it may fail through collapsing of the cell walls or through lateral bending of the cells and fibres. In wet wood and in the hardwoods, which are composed of thick-walled fibres and vessels, incipient failure is due to bending of the individual fibres. In cross-grained pieces, the failure is likely to take place through shear parallel to the grain.

The strength of timber compressed across the grain is brought into play whenever a concentrated load is imposed on a beam. Since the compressive strength across the grain is only a small fraction of the compressive strength parallel to the grain, proper allowance for this discrepancy must be provided with a footing to distribute the pressure.

***Tensile Strength:*** When a properly shaped wooden stick is subjected to tensile forces acting parallel to the grain it is found to have greater strength that can be developed under any other kind of stresses. Indeed, the tensile strength of wood parallel to the grain is so great that much difficulty is encountered in designing end connections so that the tensile strength of a piece can be developed. Therefore, wood tension members are rarely used. Tensile strength parallel to the fibres is of the order 80.0 to 190.0 N / mm$^2$. However, wooden parts restrained at their ends suffer from shearing stresses and crushing which wood resists poorly, and cannot be extensively used in structure working under tension. Moreover, since the tensile strength parallel to the grain is two to four times the compressive strength, the latter governs the strength of beams. The tensile strength parallel to the grain is influenced to some extent by the nature of the wood elements and their arrangement, but principally by the straightness of the grain and the thickness of the walls of the longitudinal elements. When failure occurs, these elements are ruptured transversely. Knots greatly reduce the tensile strength parallel to the grain. The tensile strength is less affected by moisture than are other mechanical properties.

Across the grain, the tensile strength of wood is low. It is a property closely related to cleavability, and it often determines the strength of a beam which has cross-grain or spiral-grain in its tension fibres. Failure in tension across the grain occurs through separation of the cells and fibres in longitudinal planes. Knots, shakes, etc. reduce the tensile strength of wood across the grain.

***Bending Strength:*** Wood well withstands static bending, owing to which it is widely employed for elements of buildings, e.g. beams, slabs, rafters, trusses, etc. The initial failure of long beams of uniform width is indicated by a wrinkling of the overstressed compression fibres, much like the failures which occur in compression prisms. Final failure of such beams is generally in tension. It is accompanied more or less by snapping as the individual fibres begin to break when the maximum load is reached. Very dry specimens sometimes fail very suddenly in tension before any wrinkling of the compression fibres is noticeable. However, green test pieces fail silently in compression without rupturing of the tensile fibres. Short deep beams fail by horizontal shear suddenly, and this is more common in well seasoned timber of structural sizes than in green timbers or in small beams. Very often shear failures result from defects.

Long narrow beams must be restrained laterally and supported in such manner that the wide sides are vertical. If the first condition is not fulfilled, the member will fail from column action in the compression fibres. Unless the second condition is met, strength of the beam may be very seriously reduced through the inclination of the neutral axis. These requirements are satisfied by diagonal bracing known as *bridging*. The bending strength of some of the timbers is given in Table 4.3.

**Table 4.3 Bending Strength of Timbers**

| *S. No.* | *Trade name* | *Unit weight N/m$^3$ at 12% moisture content* | *Bending strength (N/mm$^2$) Location* | | *Durability* |
|---|---|---|---|---|---|
| | | | *Inside* | *Outside* | |
| 1. | Babul | 8350 | 18.2 | 15.4 | Low |
| 2. | Chir | 5750 | 8.4 | 7.0 | Low |
| 3. | Deodar | 5600 | 10.2 | 8.8 | High |
| 4. | Fir | 4650 | 7.8 | 6.6 | Low |
| 5. | Jaman | 8500 | 15.2 | 12.6 | Moderate |
| 6. | Mango | 6550 | 12.4 | 10.2 | Low |
| 7. | Oak | 8650 | 14.8 | 12.4 | Moderate |
| 8. | Sal | 8000 | 16.8 | 14.0 | High |
| 9. | Teak | 6250 | 14.0 | 11.6 | High |
| 10. | Neam | 8360 | | | – |
| 11. | Rosewood | 7550 | | | High |
| 12. | Shishum | 7850 | | | Moderate |
| 13. | Cail | 5150 | | | Low |

***Shearing Strength:*** Wood has low shearing strength of 6.5–14.5 N/mm$^2$ along the fibres. Resistance of wood to cutting across the fibres is 3 to 4 times greater than that along the fibres, but pure shear generally does not take place since the fibres are also subjected to crushing and bending.

***Stiffness:*** Stiffness in a timber structure is often of as much importance as strength, but it is much more frequently neglected in designing. Floors must be sufficiently stiff so that they will not deflect appreciably under working loads as else they give one the feeling of insecurity. Likewise, the deflection of rafters should be limited, if it is desirable, to avoid the disagreeable appearance of a sagged roof. In general, denser woods are more stiff. A green timber is less stiff than when seasoned. The structural sizes of timber are about as stiff as the clear small sticks.

***Toughness:*** A wood which has a large capacity to resist shock or blows is called tough. In order to be tough a wood must have both strength and flexibility. Hardwood as a class excels in toughness. Long leaf pine is the only one of the conifers possessing much toughness. In general, green wood is tougher than seasoned wood. Toughness is best measured by the energy of the blow required to rupture a beam in transverse impact.

***Cleavability*** is the measure of the ease with which wood may split. Most hardwoods split more easily along radial planes than along tangential surfaces. Since splitting is accomplished by wedging apart the longitudinal elements, it is closely related to tension, across the grain. Woods which must be fastened by nails and screws should have a high resistance to splitting. Among the conifers, with an exception of longleaf pine, the difference in cleavage strength in the two directions is not great.

***Hardness*** is defined and measured as resistance to indentation and resistance to scratching. Both are important properties in woods used for finishing and for furniture. These properties, together with the ability to wear without splintering, determine the wearing resistance of wood for floors and pavements. Aside from the indentation tests no satisfactory type of test has been devised to measure these properties.

### Effect of Moisture on Mechanical Properties of Wood

Variations in the moisture content of the cell walls are accompanied by large changes in the strength and stiffness of wood. After years of seasoning, large timbers may lose enough water to effect an increase in tensile and compressive strength and in stiffness, but defects arising from shrinkage stresses often decrease the resistance to horizontal shear stresses. In kiln-seasoning, the normal increase in strength due to loss of moisture is often nullified by case-hardening, a condition which prevents complete drying of the piece and produces internal stresses.

The mechanical properties of wood are not materially affected by a reduction of the moisture content until the point of fibre-saturation is reached. Further drying causes a large, proportionate increase in strength and stiffness.

### Effect of Temperature on Strength of Wood

The effects of temperature on wood are dependent upon the moisture content. Dry wood expands slightly when heated, while wet wood shrinks owing to evaporation of moisture. When the temperature of wood is raised above room temperature it becomes weaker in most strength properties. Very high temperatures, such as those used in vulcanizing, slightly weaken dry wood. Freezing somewhat increases both the strength and stiffness of wood. If wood is kept moist during the heating process, it is rendered very pliable and is weakened.

## 4.16 WOOD PRODUCTS

Many wood based products have been developed to economise on the use of timber. These wood products are manufactured under controlled conditions in factories. As such, these have desired shape and dimensions, appearance, strength and durability. Some of these are described below.

### Veneers (IS: 14315)

The primary process in the manufacture of wood based products is veneering which produces thin sheets of wood known as *veneers*. The thickness of veneers varies from 0.4 to 0.6 mm. In no case it should exceed 1 mm. The most suitable wood for this purpose is walnut. However other species like teak, sissoo, rose wood, etc. are also used. The logs to be used for this purpose are kept in wet storage to avoid end splitting and are softened by heating with hot water or steam and the bark is removed. The log is then cut to veneers. Depending on the cutting process, the veneers are classified as rotary veneers (Fig. 4.23) and sliced veneers (Fig. 4.24). These are used in the manufacture of plywood and other laminated boards.

### Classification

Veneers are classified into two types or surfaces namely, Type A and Type B. The quality requirements in the terms of permissible defects for the two types of surfaces are given in Table 4.4. The maximum numbers of categories of defects permitted are restricted and are given in Table 4.5.

## Dimensional Tolerances

Following tolerance are permitted on the dimensions.

| **Dimension** | **Tolerance** |
|---|---|
| Length | +6 mm |
| Width | +3 mm |
| Squareness | 0.2 % |
| Edge straightness | 0.2 % |

**Table 4.4 Quality Requirements of Veneers**

| *S. No.* | *Defect Categories* | *Type of Surfaces* | |
|---|---|---|---|
| | | *A* | *B* |
| (i) | Discolouration | Nil | 5 percent |
| (ii) | Dote* | 50 mm/m$^2$ | 150 mm/m$^2$ |
| (iii) | Insect hole | Scattered up to 12 holes/m$^2$ | Scattered up to 24 holes/m$^2$ |
| (iv) | Joints | One joint for every multiple of 200 mm provided, no individual piece is less than 100 mm in width | No restriction |
| (v) | Knots (dead) | 2 No. up to 12 mm dia/m$^2$ | 4 No. up to 20 mm dia/m$^2$ |
| (vi) | Pin knots (dead) | 2 No./m$^2$ | 6 No. m$^2$ |
| (vii) | Pin knots (live) | No restriction | No restriction |
| (viii) | Knots (tight) | 6 No. upto 25 mm dia/m$^2$ | No restriction |
| (ix) | Patches | 4 patches/m$^2$ provided. They are all tight patches and do not mar the appearance | Any number provided they are all tight patches and do not mar the appearance |
| (x) | Splits | 2 splits, each not more than 1 mm wide and length not more than 100 mm | 3 splits, each not more than 4 mm wide and length not more than 150 mm |
| (xi) | Swirl | Unlimited, provided they do not mar the appearance | No restriction |

*It is an early stage of dacay characterized by local discolouration of wood most frequently in the form of streaks along the grain but sometimes as spots.

**Table 4.5 Permissible Categories of Defects**

| *Types of Surfaces* | *Maximum Number of Categories of Permissible defects per square metre* |
|---|---|
| A | 3 |
| B | 5 |

## Plywood

A wood panel glued under pressure from an odd number (usually 3 to 13) of layers/piles of veneers is known as plywood (Fig. 4.25). The outer most veneer sheets in a plywood panel are called/faces. The interior ply/plies which have their grain directions parallel to that of the faces are termed as *core/centre.* Other piles which have grain directions perpendicular to that in the face are termed as *cross bands.*

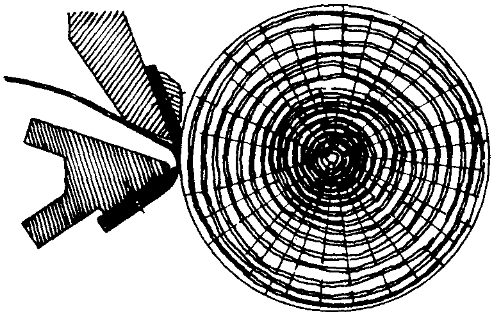

Fig. 4.23 Rotary Cutting

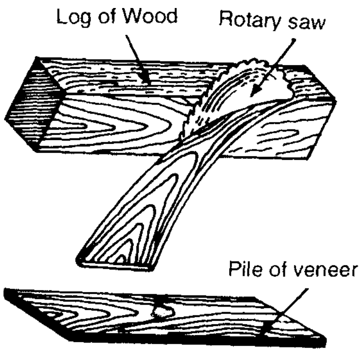

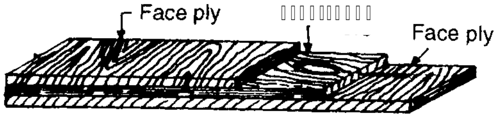

Fia. 4.24 Sliced Veneer

Fig. 4.25 Plywood

Plywood may be classified upon direction of grains in the plies and on the type of adhesive used. Normally the alternate plies are oriented at 30° or 60° in *star* plywood. The faces are arranged with the grain at 45° to that of the centres in *diagonal* plywood. When the plies are bonded together with water-soluble glues such as casein glue, *interior grade* plywood is obtained and when bonded with phenol formaldehyde adhesive it is identified as *exterior grade* plywood which is completely water proof.

## Classification

***Based on Grades:*** Plywood for general purposes should be of the following two grades, depending upon the bond strength developed by the adhesive used for bonding the veneers:

(a) Boiling water resistant or BWR Grade, and
(b) Moisture resistant or MR Grade.

***Based on Appearance:*** Plywood for general purposes should be classified into three types, namely, AA, AB and BB based on the quality of the two surfaces, namely, A and B in terms of general permissible defects. The type of plywood should, therefore, be designated by the kind of surfaces of the panels. The better quality surface should be called 'face', and the opposite side should be called 'back'. If the face and the back are of the same quality, they are not distinguished. The type of plywood would denote first the quality of face followed by the quality of back. For example, Type AA should have both surfaces of quality A, Type AB should have face of quality A and the back of quality B and Type BB should have both the surfaces of quality B.

The thickness of plywood boards for general and structural purposes should be as given in Table 4.6.

**Table 4.6 Thickness of Plywood Boards (IS: 303 and 10701)**

| *Board* | *Thickness (mm)* | |
|---|---|---|
| | *General Purpose* | *Structural Purpose* |
| 3 ply | 3, 4, 5, 6 | 4 |
| 5 ply | 5, 6, 8, 9 | 6, 9 |
| 7 ply | 9, 12, 15, 16 | 12, 16 |
| 9 ply | 12, 15, 16, 19 | 16, 19 |
| 11 ply | 19, 22, 25 | 19, 25 |
| Above 11 ply | On order | |

## Tolerances

The following tolerances on the nominal sizes of finished boards should be permissible:

| *Dimension* | *Tolerance* | |
|---|---|---|
| | *General Purpose* | *Structural Purpose* |
| (a) Length | +6 mm<br>–0 mm | +6 mm<br>–0 mm |
| (b) Width | +3 mm<br>–0 mm | +3 mm<br>–0 mm |
| (c) Thickness | | |
| 1. less than 6 mm | ±10% | ±10% |
| 2. 6 to 9 mm | ±5 % | ±7 % |
| 3. above 9 mm | | ±5 % |
| (d) Squareness | ± 0.2% | 0 |
| (e) Edge straightness | ±0.2% | 0 |

Structural plywood panels are available in following sizes.
2400 × 1200 mm, 2100 × 1200 mm, 1800 × 1200 mm, 2400 × 900 mm, 2100 × 900 mm, 1800 × 900 mm.

### *Advantages*

1. It has good strength both along as well as across the grains.
2. The wood shrinks or swells more across the grains. Since plywood has cross-grained construction, the tendency to shrink or swell is reduced.
3. It has better splitting resistance due to the grains in adjacent veneers in cross direction as such nailing can be done very safely even near the edges.
4. Plywood can be curved into desired shapes.

***Uses:*** These are extensively used for partitions, ceilings, doors, concrete form work, plywood boards, lamin boards (built-up boards with core strips up to 7 mm wide and 7 mm thick) and block boards (built-up boards) etc.

## Fibre Boards (IS: 1658)

These boards built up of felting from wood or vegetable (wood wastes, waste paper, agricultural wastes, etc.) are classified by the process of their moulding. If the boards are moulded by wet process, the main bond is by the felting of woody fibres and not by added glue. For the boards moulded by dry process, the bond between the predried fibres is improved by adding 4–8% of synthetic resin. For better performance wood preservatives and other admixtures are often added to the pulp. *Insulating boards* are not compressed during manufacture. Fibre boards are manufactured in various densities like soft, medium and hard. The soft boards are used for walls and ceilings. Medium boards find their application in panelling, partition walls, doors and windows. *Hard boards* have one surface smooth and the other one textured. These have higher densities, better mechnical properties, and improved moisture and termite resistances. The strength and weather properties of hard boards can be improved by oil tempertering and such boards are known as *tempered hard boards.* Some of the trade names of hard boards are Masonite. Celotex. Essex boards, etc.

***Classification*** Hard boards are classified as medium, standard or normal and tempered hard boards depending upon the density. The requirements of hard boards are given in Tables 4.7, 4.8 and 4.9.

**Table 4.7 Requirements of Hardboards**

| *Type of Board* | *Average density ($10^3 \times Kg/m^3$)* | *Thickness (mm)* | *Bending strength (Modulus of rupture) average (MPa)* | *Maximum water absorption by mass after 24 hrs immersion (%)* |
|---|---|---|---|---|
| | | | 6 | |
| Medium | Min. 0.35 | 8 | 6 | 40 |
| hardboard | Max. 0.80 | 10 | | |
| | | 12 | | |
| Standard | More than | 3 | 30 | 40 |
| hardboard | 0.80 | 4 | | |
| | | 5 | | |
| | | 6 | 30 | 30 |
| | | 7 | | |
| Tempered | 1.2 | 3 | | |
| hardboard | | 4 | | |
| | | 5 | 50 | 20 |
| | | 6 | | |
| | | 9 | | |

**Table 4.8 Thickness of Hardboards**

| *Type* | *Nominal thickness (mm)* | *Tolerance (mm)* |
|---|---|---|
| Medium hardboard | 6 | ± 0.5 |
| | 8 | ± 0.7 |
| | 10 | ± 0.7 |
| | 12 | ± 0.9 |
| Standard hardboard | 3 | |
| | 4 | ± 0.4 |
| | 5 | |
| | 6 | ± 0.5 |
| | 9 | ± 0.7 |

**Table 4.9 Width and Length of Hardboards**

| *Type* | *Width (m)* | *Maximum tolerance on Width (mm)* | *Length (m)* | *Maximum tolerance on length (mm)* |
|---|---|---|---|---|
| Medium hardboard | 1.2 | ± 3 | 1.2,1.8,2.4<br>3.0,3.6,4.8<br>and 5.5 | ± 5 |
| Standard hardboard | 1,2 | | | |
| Tempered hardboard | 1.2 | | | |

***Uses:*** They are widely used for wall and ceiling cladding, partitions, doors, perforated acoustic tiles, railway carriages, bus bodies, etc.

## Particle Boards or Chip Boards (IS: 3129, 12406, 3478)_

They are manufactured from particles of wood or other ligno cellulose materials which are agglomerated, formed and pressed together by the use of an organic binder together in the presence of heat, pressure or moisture. They are manufactured from small timber pieces and wood wastes. The latter is first converted into small chips. The moisture content of chips is reduced to a certain percentage and then some gluing material, usually phenol formaldehyde, is sprayed. The chips are then spread to form a mat and then pressed in a hydraulic press in presence of heat and moisture. Particle boards avoid wastage of timber as in its making the entire volume of the fallen tree can be utilized. The trees used for making particle boards are eucolyptus, subabool, and rubber wood, and waste of saw mill. These boards provide dimensional stability, smooth uniform surface, and no difficulty in nailing.

## Classification

Depending on density these are classified as given in Table 4.10.

**Uses:** These are widely used in buildings, partitions, ceilings, floor slabs, doors, furniture, etc.

## Block Boards (IS: 1659)

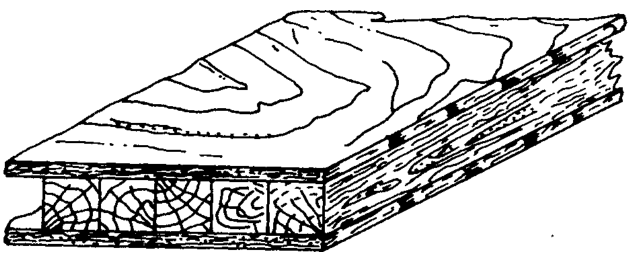

Fig. 4.26 Block Board

The core of black boards is made up of strips of wood each not exceeding 25 mm in width, forming a slab, glued between at least two surface veneers (Fig. 4.26). Veneers used for cross bands and faces are either rotary cut or sliced and should be reasonably smooth. Cross band thickness varies between 1–3 mm and face veneers between 0.5 to 1.5 mm in thicknesses. These are available in thicknesses of 12, 15, 19, 25, 30, 35, 40 and 50 mm. The directions of the grains of the core blocks run at right angles to that of the adjacent outer veneers.

Block Boards are available in sizes 2400 × 1200, 2100 × 1200, 1200 × 900, 1800 × 1200, 1800 × 900 mm. Following toleraness are permitted.

### Table 4.10 Types and Properties of Wooden Particle Boards

| *Type* | *IS:3129*<br>*Low Density* | *IS: 12406*<br>*Medium Density* | | | | | *IS: 3478*<br>*High Density* | | | |
|---|---|---|---|---|---|---|---|---|---|---|
| | | *FPS* | *FPT* | | *XPS* | *XPT* | *Type 1* | | *Type 2* | |
| | | | *FPT1* | *FPT2* | | | *Grade A* | *Grade B* | *Grade A* | *Grade B* |
| Maximum Moisture Content(%) | 16 | 15 | | | | | 3-7 | 5-16 | 5-10 | 5-16 |
| Minimum Modulus of Rupture (N/mm$^2$) | 1.5 | 11 | 12.5 | 11 | 2 | 1 | | | | |
| Density (Kg/m$^3$) | <400 | 500-900 | | | | | 1200 | 900 | 1200 | 900 |
| Minimum Tensile Strength (N/mm$^2$) | | 0.8 | 0.4 | 0.3 | 1.2 | 0.4 | 35 | 30 | 25 | 20 |
| Water Absorption (24 hr)% | | 50 | 20 | 80 | 80 | 80 | 10 | 25 | 15 | 25 |
| Sizes (mm) | | | | | | | | | | |
| Length | 3650, 3000, 2700 2400, 1800, 1500 1000, 900, 600, 450 and 300 | 4850, 3650, 3000, 2750, 2400 2100, 1800, 1500, 1200, 1000 and 900 | | | | | 1800, 1500, 1200, 1000, 900, 600, 450 | | | |
| Width | 1800, 1500, 1200, 1000, 900, 600 450 and 300 | 1850, 1800, 1500, 1200, 900 and 650 | | | | | 1500, 1200, 1000, 900, 450 | | | |
| Thickness | 12, 16, 19, 22, 25 27, 30, 35, 40, 45, 50 | 6, 9, 12, 15, 18, 19, 22, 25, 27 30, 35, 40 | | | | | 4, 6, 9, 12, 16, 20, 25, 30, 35, 40, 50 | | | |
| Tolerances (mm) | | | | | | | | | | |
| Length | ± 8 | | | | | | | | | |
| Width | ± 8 | ± 8 | | | | | ± 8 | | | |
| Thickness | ± 1 (for above 25 mm) | ± 8 | | | | | ± 8 | | | |
| | ± 0.8 (up to and including 25 mm) | ± 2.5 | | | | | ± 2.5 | | | |
| | | ± 5 | | | | | ± 5 | | | |

***Note:*** **Flat Pressed Single Layer (FPS)**
**Flat Pressed Three Layer Multilayer and Graded (FPT)**
**Extrusion Pressed Solid (XPS)**
**Extrusion Pressed Tabular (XPT)**

**4.1.1** ***Length*** + 6 mm
– 0mm
**4.1.2** ***Width*** + 3 mm
– 0 mm
**4.1.3** ***Thickness***
Less than 6 mm ± 10 percent
6 mm and above ± 5 percent
**4.2** **Edge Straightness**—2 mm per 1000 mm
**4.3** **Squareness**—2 mm per 1000 mm

The grades and types of block boards are represented as:

| | |
|---|---|
| **ICOM** | **Interior grade commercial type** |
| **IDEC** | **Interior grade decorative type** |
| **XCOM** | **Exterior grade commercial type** |
| **XDEC** | **Exterior grade decorative type** |

These are further subgraded as Grade I and Grade 2. Grade I is *exterior grade* used for bus bodies, railways coaches, prefabricated houses, etc. and Grade 2 is *interior grade* used for furniture, partition, panelling, ceiling, etc.

***Uses:*** These are extensively used for construction of railways carriages, bodies of buses, marine and river crafts, partitions, furniture, etc.

**Batten Boards and Lamin Boards:** Batten boards have core made up of 80 mm wide wood pieces as shown in Fig. 4.27, forming a slab glued between at least two surface veneers.

Whereas, Lamin boards have a core of strips, each not exceeding 7 mm in thickness as shown in Fig. 4.28, glued together to form a slab which in turn is glued between two or more outer veneers. The directions of the grains of the core block run at right angles to that of the adjacent outer veneers.

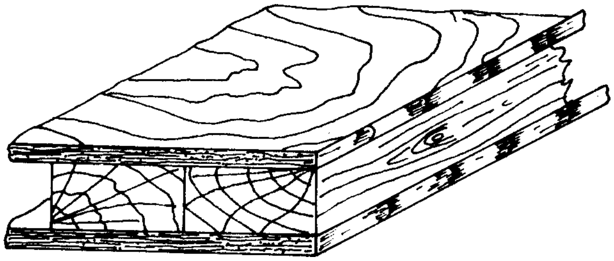

**Fig. 4.27 Batten Board**

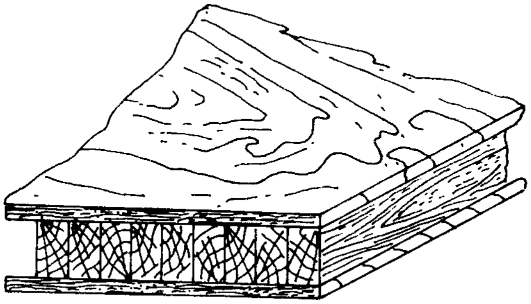

**Fig. 4.28 Lamin Board**

## 4.17 APPLICATIONS OF WOOD AND WOOD-PRODUCTS

In modern building practice, wood is extensively used for walls and floors of buildings, carpentry and graded plank items, as well as prefabricated standard wooden cottages. A great quantity of wood is consumed in building and installation work for making piles, poles, various load-bearing components formworks, scaffolds, etc.

Wood materials and items used in building practice include round timber (log); sawn timber and planks; floor materials—flooring boards, end-grain blocks and fibre board; carpentry items— doors, windows, partitions, panels and gates; roof materials—shavings, tiles and shingles, members of roof trusses; wooden structures—beams, columns, slabs, and items of prefabricated houses.

Glued wood components—e.g., beams, trusses, arches, frames and roofs of buildings and installations— are very effective in chemically aggressive media because their service life is 1.5 times greater than that of steel or reinforced concrete. However, the use fo wood should be economically justified and the possibility of replacing it with prefabricated concrete, asbestos-cement, gypsum, plastics and other items should be carefully considered.

The use of fibreboard, ply-boards in building practice provides a substantial saving both in capital investments and running costs. The economy is provided, in the first place, by a more complete utilization of raw materials for the manufacture of building materials and items.

The use of boards made of pressed wood shavings in dwelling house construction has a great economical effect. Currently, wood waste is utilized to manufactures polymer and cement based fibreboard and wood shavings board. This also allows manufacturing materials of better physical, mechanical and decorative properties than wood.

## EXERCISES

1. Draw the cross-section of a matured tree. What is the best season for felling a tree?
2. What suggestions do you propose for improvement in construction to avoid decay of timber, and what measures are to be taken, when it has occurred?
3. (a) State the principal causes of decay of timber.
   (b) How is seasoning done on a large scale?
   (c) Discuss the methods of preserving timbers.
4. (a) What are dry and wet rots? How are they caused and prevented?
   (b) What is seasoning of timbers and why is it done?
   (c) State the qualities you will consider in selecting timber for construction purposes?
5. (a) What is the effect of paint on unseasoned timber?
   (b) What are the requirements of good preservatives? What are the main types?
   (c) Describe various defects in timber?
6. Explain the following defects of timber.
   (a) Shakes (b) Rindgall
   (c) Upsets (d) Knots
7. (a) What is the difference between soft wood and hard wood?
   (b) State the characteristics of good timber.
   (c) Describe briefly the methods of timber preservation.
   (d) What are the diseases of timbers?
8. Write short notes on the following:
   (a) Defects in timber (b) Ply wood
   (c) Seasoning of timber (e) Hard board
   (d) Preservation of timber (f) Veneers

9. Discuss briefly the following:
   (a) Effects of moisture on mechanical properties of wood.
   (b) Effect of temperature on strength of wood.
   (c) Fire resistance of timber.
10. Describe the physical and mechanical properties of timber.
11. Suggest suitable timber for the following purposes. Give also the reasons for your choice.
   (a) Doors (b) Railway sleepers
   (c) Piles (d) Scaffolding
   (e) Shuttering (f) Pegs
   (g) Purlins (h) Well curb
   (i) Furniture (j) Agricultural equipments
   (k) Packing boxes
12. Write short notes on the following:
   (a) AsCu Treatment (d) Lamin board
   (b) Plywood (e) Chip board
   (c) Hard board (f) Batten board
13. (a) Describe the various processes of application of preservatives.
   (b) Define seasoning of timber. How is seasoning done on large scale?
   (c) Why is it necessary to provide odd number of veneers in a plywood?
14. (a) What is plywood and where is it used with advantage? State its uses in modern buildings.
   (b) What are the principal categories in which the trees can be classified? Give two examples of each of them along with their users as building material.
15. Describe the chief characteristics and uses of the following in the construction industry:
   (a) Sheeshum (d) Bamboo
   (b) Teak (e) Sal
   (c) Deodar (f) Plywood
16. Differentiate between:
   (a) Exogenous and endogenous trees
   (b) Star shake and heart shake
   (c) Natural and artificial seasonings
   (d) Lamin board and batten board
17. What are the various tests performed to test the suitability of timber? Describe in detail the tests performed to determine moisture content of timber.
18. Describe the following tests for timber:
   (a) Compressive strength (c) Cleavability
   (b) Impact strength (d) Tensile strength
19. (a) Explain the damage caused by insects to wood.
   (b) Why is preservative treatment necessary for timber?
   (c) Describe briefly the application of preservatives to increase the fire resistance of wood.
20. (a) What are the advantages of wood based products?
   (b) Explain the different ways of classification of timber.
   (c) Explain the different methods of veneering.

## OBJECTIVE TYPE QUESTIONS

1. Consider the following statements :
   Conifers
   (i) are endogenous trees
   (ii) grow outwards
   (iii) have pointed needle like leaves
   Of the above statements
   (a) (i), (ii) are correct (b) (ii), (iii) are correct
   (c) (i), (ii) and (iii) are correct (d) (i), (iii) are correct
2. The age of trees can be predicted by
   (a) length of medulary rays (b) counting number of rings
   (c) by measuring the diameter of pith (d) by the thickness of bark
3. Lumber
   (a) implies a living tree (b) is a part of felled tree
   (c) is log of timber sawn into pieces of desired shape
   (d) is used to denote standing timber.
4. Match List-I with List-II and select the correct answer using the codes given below the lists :

| *List-I* | *List-II* |
|---|---|
| A. The innermost part of core of the stem of a tree | 1. Transverse septa (Medullary rays) |
| B. The vascular tissue which encloses the pith | 2. Annual rings |
| C. A cellular tissue and woody fibre arranged in distinct concentric circle | 3. The cambium layer |
| D. The thin layer below the bark not converted into sap wood as yet | 4. The outermost cover or skin of the stem |
| | 5. Medulla (pith) |

   Codes:

| | A | B | C | D |
|---|---|---|---|---|
| (a) | 2 | 5 | 3 | 4 |
| (b) | 5 | 1 | 2 | 3 |
| (c) | 4 | 3 | 2 | 1 |
| (d) | 5 | 1 | 4 | 3 |

5. Match List-I with List-II and select the correct answer using the codes given below the lists :

| *List-I* | *List-II* |
|---|---|
| A. Deciduous | 1. Soft wood |
| B. Conifer | 2. Hard wood |
| C. Endogenous | 3. Eucalyptus |
| D. Exogenous | 4. Bamboo |

Codes:

| | | | | | | | | | |
|---|---|---|---|---|---|---|---|---|---|
| (a) | A | B | C | D | (b) | A | B | C | D |
| | 1 | 2 | 3 | 4 | | 2 | 1 | 3 | 4 |
| (c) | A | B | C | D | (d) | A | B | C | D |
| | 2 | 1 | 4 | 3 | | 1 | 2 | 4 | 3 |

6. Match List-I with List-II and select the correct answer using the codes given below the lists :

| *List-I* | *List-II* |
|---|---|
| A. Highly refractory | 1. Slow and difficult to season free from defects |
| B. Moderately refractory | 2. May be seasoned free from surface defects under rapid drying conditions |
| C. Non-refractory | 3. Can be rapidly seasoned free from surface defects |
| | 4. Refractory to treatment |

Codes:

| | | | | | | | |
|---|---|---|---|---|---|---|---|
| (a) | A | B | C | (b) | A | B | C |
| | 1 | 2 | 3 | | 4 | 1 | 3 |
| (c) | A | B | C | (d) | A | B | C |
| | 4 | 3 | 2 | | 3 | 2 | 1 |

7. Which of the following is not an objective of seasoning timber?
(a) Reduction in shrinkage and warping
(b) Reduction of weight
(c) Increase in strength and durability
(d) Reduction of natural defects in timber

8. The drawback of electric seasoning of timber is
(a) checks (b) splitting (c) cracks (d) reduced strength

9. Seasoning of timber is necessary to
(a) increase the fire resistance
(b) increase the vermin resistance
(c) reduce the microbial substances
(d) expel the moisture present in timber

10. Seasoning of timber is required to
(a) soften the timber (b) harden the timber
(c) straighten the timber (d) remove sap from the timber

11. How many days, a timber may require for natural seasoning?
(a) 20 months (b) 4 – 6 months (c) 1 year (d) 2 years

12. Consider the following statements :
Seasoning of timber results in
1. increased strength
2. increased durability
3. reduced resilience
Of these statements
(a) 1, 2 and 3 are correct (b) 1 and 3 are correct
(c) 1 and 2 are correct (d) 2 and 3 are correct

13. Which of the following pairs regarding the fefects in timber are correctly matched?

| | | |
|---|---|---|
| 1. | Upsets | Due to over maturity of unventilated storage of wood |
| 2. | Foxiness | Due to crushing of fibres running transversely |
| 3. | Star shakes | Radial splits widest at the circumference and diminishing towards the centre |
| 4. | Heart shakes | Cracks widest at the centre and diminishing towards the outer circumference |

Select the correct answer using the codes given below

(a) 1 and 2
(b) 3 and 4
(c) 1, 3 and 4
(d) 2 and 4

14. Which of the following pairs is matched correctly ?

| *(Defect)* | *(Causes)* |
|---|---|
| (a) Heart shake | Serve frost and fierce heat by sun |
| (b) Cup shake | Frost action |
| (c) Star shake | Irregular cutting of branch |
| (d) Upsets | Basis of branches burried by cambial activity of mother branch |

15. Match List-I (Name of defect) with List-II (Definition) and select the correct answer using the codes given below the list :

| *List-I*<br>*(Name of Defect)* | *List-II*<br>*(Definition)* |
|---|---|
| A. Cupping | 1. Caused by wood limbs encased by wood of the free trunk |
| B. Bowing | 2. Caused by grain irregularities in the board and can be eliminated by proper stacking |
| C. Chucks | 3. Small cracks appearing at the ends of boards caused by too rapid drying |
| D. Knots | 4. Unequal shrinking in the radial and tangential direction. |

Codes:

| | A | B | C | D |
|---|---|---|---|---|
| (a) | 1 | 2 | 3 | 4 |
| (b) | 4 | 3 | 2 | 1 |
| (c) | 1 | 3 | 2 | 4 |
| (d) | 4 | 2 | 3 | 1 |

16. Fire proofing of timber

(a) makes the timber surface fire proof
(b) makes it difficult to ignite and support its own combustion
(c) does not allow the fire come closer to wood
(d) extinguishes the fire and dissipates the heat generated

17. Which of the following woods is not suitable for making bridge?

(a) Babool (b) Nageshwar (c) Sal (d) Teak

18. Match List-I with List-II and select the correct answer using the codes given below the lists :

| *List-I* *(Terms)* | *List-II* *(Brief definition)* |
|---|---|
| A. Sap Wood | 1. Separation between adjacent layers of tissues |
| B. Knot | 2. Disintegration caused by fungi |
| C. Shake | 3. A branch base embedded in timber by natural growth |
| D. Rot | 4. Outer layers of a log of wood |

Codes:

| | A | B | C | D |
|---|---|---|---|---|
| (a) | 1 | 2 | 3 | 4 |
| (b) | 3 | 4 | 2 | 1 |
| (c) | 1 | 3 | 2 | 4 |
| (d) | 4 | 3 | 1 | 2 |

19. Which of the following in timber is caused by fungus?
    (a) Upsets (b) Foxiness (c) Dry rot (d) Wet rot
20. The moisture content recommended for doors is
    (a) 4 – 8% (b) 8 – 14% (c) 12 – 20% (d) 2 – 4 %
21. Decay of wood is caused in acid medium if $p_H$ is
    (a) < 2 (b) < 3 (c) < 4 (d) < 6
22. Tensile strength of wood parallel to grains is about
    (a) 2 (b) 3 (c) 4 (d) 5
    times its compressive strength, parallel to the grains.
23. On application of external stress on timbers, it behaves like
    (a) an elastic material (b) non-elastic material
    (c) viscoelastic material (d) non-viscoelastic material
24. The ratio of tangential shrinkage to radial shrinkage of wood due to reduction in moisture content is
    (a) in the range from 3.1 to 5.1 (b) in the range from 2 to 3
    (c) in the range from 1 to 2 (d) less than or equal to 1
25. Which one of the following statements is the correct description of the structure of fibre board?
    (a) The slices of superior quality of wood are glued and pressed on the surface of inferior wood
    (b) Steamed mass of wood dusts, wood wool and other vegetables fibres are pressed hard to a thickness varying from 3 mm to 12 mm
    (c) Thin and narrow wood shavings are soaked in a refractory binder material and pressed hard
    (d) Wood veneer backed by fabric mat
26. Knots reduce the tensile strength of wood
    (a) along the grain (b) across the grain
    (c) tangential to the grain (d) none of the above

27. Pick out the incorrect statement regarding stiffness of wood
    (a) Denser wood are more stiff
    (b) Green timber is more stiff than when seasoned
    (c) Structural sizes of timber are more stiff than the clear small sticks
    (d) Wood is not a stiff material
28. By reducing moisture content of timber above fibre saturation points which one of the following is not correct?
    (a) Tensile strength is increased
    (b) Compressive strength is increased
    (c) Stiffness is increased
    (d) Shear strength is increased
29. Hard boards are example of
    (a) plywood (b) fibre board (c) particle board (d) chip board
30. As a construction material, plywood is preferred to thin planks of timber because of
    (a) good strength and dimensional stability in both lateral and longitudinal directions
    (b) good dimensional stability in both longitudinal and lateral directions
    (c) good strength in both longitudinal and lateral directions
    (d) savings in cost and environmental considerations.
31. Plywood is specified by
    (a) weight (b) volume (c) thickness (d) number of layers
32. Plywood has great stifness and strength
    (a) across the grains (b) along the grains
    (c) both (a) and (b) (d) tangential to the grain
33. The expansion and shrinkage of plywoods are comparatively very low as
    (a) they are held in poisition by adhesives
    (b) they are glued under pressure
    (c) plies are places at right angles to each other
    (d) they are prepared from veneers
34. Timber can be made fire resistant by
    (a) dipping and steeping process (b) sir Abel's process
    (c) charring (d) hot and cold open tank treatment
35. Consider the following methods of preservation of timber
    1. Dipping 2. Brushing or spraying
    3. Pressure impregnation
    The correct sequence in decreasing order of the effectiveness of these methods of preservation is
    (a) 1, 2, 3 (b) 2, 1, 3 (c) 3, 1, 2 (d) 3, 2, 1
36. The wood preservative "Creosote" is derived from
    (a) wood or coal (b) acidic cupric chromate
    (c) chromated zinc chloride (d) pentachlorophenol
37. During the conversion of timber by sawing, in order to obtain strong timber pieces, the cuts should be made by
    (a) ordinary sawing (b) tangential sawing
    (c) quarter sawing (d) radial sawing

38. Consider the following statements :
Among the more common varieties of timber, namely, sal, mango and deodar,
1. sal is the strongest
2. mango is the least durable
3. deodar is the lightest

Of these statements
(a) 1, 2 and 3 are correct
(b) 1 and 2 are correct
(c) 1 and 3 are correct
(d) 2 and 3 are correct

39. The ratio of modulus of elasticity of wood in a direction perpendicular to the grain to the value in a direction parallel to the grain falls in the range
(a) $\frac{1}{20}$ to $\frac{1}{12}$
(b) $\frac{1}{3}$ to $\frac{1}{2}$
(c) 2 to 3
(d) 5 to 10

40. Match List-I with List-II and select the correct answer using the codes given below the lists :

| *List-I* | *List-II* |
|---|---|
| A. Agricultural implements | 1. Jack |
| B. Boat | 2. Deodar |
| C. Railway sleepers | 3. Babul |
| D. Musical Instruments | 4. Benteak |

Codes:

| | A | B | C | D |
|---|---|---|---|---|
| (a) | 1 | 2 | 3 | 4 |
| (b) | 3 | 4 | 2 | 1 |
| (c) | 4 | 3 | 1 | 2 |
| (d) | 2 | 1 | 4 | 3 |

41. According to the relevant I.S. code, the weight of the timber is to be reckoned at a moisture content of
(a) zero
(b) 4%
(c) 8%
(d) 12%

42. Timber can be made reasonably fire-resistant by
(a) soaking it in Ammonium Sulphate
(b) coating with Tar paint
(c) pumping creosote oil into timber under high pressure
(d) seasoning process

43. Consider the following methods of preservation of timber :
1. Pressure application
2. Brush application
3. Dipping
4. Open tank

The correct sequence of these methods in the increasing order of their effectiveness is :
(a) 1, 3, 4, 2
(b) 3, 4, 2, 1
(c) 2, 3, 4, 1
(d) 4, 2, 1, 3

## Answer Table

| | | | | | | | | | |
|---|---|---|---|---|---|---|---|---|---|
| 1. (b) | 2. (b) | 3. (c) | 4. (b) | 5. (c) | 6. (a) | 7. (d) | 8. (b) | 9. (d) | 10. (d) |
| 11. (b) | 12. (c) | 13. (b) | 14. (b) | 15. (d) | 16. (b) | 17. (d) | 18. (d) | 19. (c) | 20. (c) |
| 21. (c) | 22. (b) | 23. (a) | 24. (b) | 25. (b) | 26. (b) | 27. (c) | 28. (d) | 29. (b) | 30. (a) |
| 31. (d) | 32. (c) | 33. (c) | 34. (b) | 35. (c) | 36. (a) | 37. (b) | 38. (a) | 39. (a) | 40. (b) |
| 41. (d) | 42. (d) | 43. (c) | | | | | | | |

# 5

# Materials for Making Concrete-I Cement

## 5.1 INTRODUCTION

Assyrians and Babylonians were perhaps the first to use clay as cementing material. In ancient monuments, e.g. forts, places of worship and defence structures, stones have been invariably used as a construction material with lime as the binder. Records show that Egyptians have used lime and gypsum as cementing materials in the famous pyramids. Vitruvius, a Roman scientist, is believed to be the first to have the know how about the chemistry of the cementitious lime. One of the most notable examples of Roman work is the Pantheon. It consists of a concrete dome 43.43m in span. The calcareous cements used by the Romans were either composed of suitable limestones burned in kilns or were mixtures of lime and puzzolanic materials (volcanic ash, tuff) combining into a hard concrete. Vitruvius's work was followed by the researches made by M. Vicat of France. Joseph Aspedin of Yorkshire (U.K.) was the first to introduce Portland cement in 1824 formed by heating a mixture of limestone and finely divided clay in a furnace to a temperature high enough to drive off the carbonic acid gas. In 1845, Issac C. Johnson invented the cement by increasing the temperature at which the mixture of limestone and clay were burned to form clinker. This cement was the prototype of the modern Portland cement. From then onwards, a gradual improvement in the properties and qualities of cement has been made possible by researchers in U.S.A., U.K., France and Germany.

Cements in a general sense are adhesive and cohesive materials which are capable of bonding together particles of solid matter into a compact durable mass. For civil engineering works, they are restricted to calcareous cements containing compounds of lime as their chief constituent, its primary function being to bind the fine (sand) and coarse (grits) aggregate particles together.

Cements used in construction industry may be classified as hydraulic and non hydraulic. The latter does not set and harden in water such as non-hydraulic lime or which are unstable in water, e g. Plaster of Paris. The hydraulic cement set and harden in water and give a product which is stable. Portland cement is one such.

Cement can be manufactured either from natural cement stones or artificially by using calcareous and argillaceous materials. The examples of natural cements are Roman cement, Puzzolana cement and Medina cement and those of artificial cement are Portland cement and special cements.

Today cement finds extensive use in all types of construction works; in structures where high strength is required e.g. bridge piers, light houses, lofty towers, and large structures such as bridges, silos, chimneys. And also in structures exposed to the action of water, e.g. reservoirs, dams, dock yards etc. Cement mortar, concrete, reinforced brick work, artificial stones, plastering, pointing and partition walls are routinely used in buildings.

## 5.2 PORTLAND CEMENT

It is a cementing material resembling a natural stone quarried from Portland in U.K. Portland cement may be defined as a product obtained by finely pulverizing clinker produced by calcining to incipient fusion, an intimate and properly proportioned mixture of argillaceous and calcareous materials. Care must be exercised in proportioning the raw materials so that the clinker of proper constitution may be obtained after burning.

The ordinary Portland cement has been classified as 33 Grade (IS269:1989), 43 Grade (IS 8112:1989), and 53 Grade (IS 12669-1987). The physical requirements of all these three types of cement are almost same except for compressive strength and are as follows:

| | *Physical requirement* | *Method of testing* | *Grade* | | |
|---|---|---|---|---|---|
| | | | *33* | *43* | *53* |
| 1. | Fineness (Sp. surface in $m^2/kg$) | Blaine's air permissibility | 225 | 225 | 225 |
| 2. | Soundness | Le Chatelier apparatus | 10mm | 10mm | 10mm |
| | | Autoclave | 0.8% | 0.8% | 0.8% |
| 3. | Setting time | Vicat apparatus | | | |
| | Initial (min) | | 30 | 30 | 30 |
| | Final (max) | | 600 | 600 | 600 |
| 4. | Compressive strength (MPa) not less than | | | | |
| | 72 ± 1 hr | | 16 | 23 | 27 |
| | 168 ± 2 hr | | 22 | 33 | 37 |
| | 672 ± 4 hr | | 33 | 43 | 53 |

IS:10262 has classified the OPC grade-wise from A to F based on 28 day compressive strength as follows.

| *Category* | *Strength (MPa)* |
|---|---|
| A | 32.5 – 37.5 |
| B | 37.5 – 42.5 |
| C | 42.5 – 47.5 |
| D | 47.5 – 52.5 |
| E | 52.5 – 57.5 |
| F | 57.5 – 62.5 |

Accordingly the 33, 43 and 53 grades of cement correspond to categories A, C and E, respectively. However, most of the 43-grade cements available in the market fall in category D and that 53-grade cements in category F.

## 5.3 CHEMICAL COMPOSITION OF RAW MATERIALS

The three constituents of hydraulic cements are lime, silica and alumina. In addition, most cements contain small proportions of iron oxide, magnesia, sulphur trioxide and alkalis. There has been a change in the composition of Portland cement over the years, mainly reflected in the increase in lime content and in a slight decrease in silica content. An increase in lime content beyond a certain value makes it difficult to combine completely with other compounds. Consequently, free lime will exist in the clinker and will result in an unsound cement. An increase in silica content at the expense of alumina and ferric oxide makes the cement difficult to fuse and form clinker. The approximate limits of chemical composition in cement are given in Table 5.1.

**Table 5.1 Chemical Composition of Portland Cement**

| *Oxide* | *Function* | *Composition (%)* |
|---|---|---|
| CaO | Controls strength and soundness. Its deficiency reduces strength and setting time | 60–65 |
| $SiO_2$ | Gives strength. Excess of it causes slow setting. | 17–25 |
| $Al_2O_3$ | Responsible for quick setting, if in excess, it lowers the strength. | 3–8 |
| $Fe_2O_3$ | Gives colour and helps in fusion of different ingredients | 0.5–6 |
| MgO | Imparts colour and hardness. If in excess, it causes cracks in mortar and concrete and unsoundness | 0.5–4 |
| $Na_2O + K_2O$ | These are residues, and if in excess cause eflorescence and cracking | 0.5–1.3 |
| $TiO_2$ | | 0.1–0.4 |
| $P_2O_5$ | | 0.1–0.2 |
| $SO_3$ | Makes cement sound | 1–2 |

***Notes:***

1. **The rate of setting of cement paste is controlled by regulating the ratio $SiO_2/(Al_2O_3 + Fe_2O_3)$.**
2. **Where development of much heat of hydration is undesirable, the silica content is increased to about 21 per cent, and the alumina and iron oxide contents are limited to 6 per cent each.**
3. **Resistance to the action of sulphate waters is increased by raising further the silica content to 24 per cent and reducing the alumina and iron contents to 4 per cent each.**

4. Small percentage of iron oxide renders the highly siliceous raw materials easier to burn. However, if these are in excess, a hard clinker, difficult to ground, is produced. When iron oxide combines with lime and alumina to form $C_4AF$, it neutralizes some of the undesirable properties contributed by alumina when combined with lime alone. When iron oxide combines with lime alone, it promotes instability.
5. The alkalis accelerate the setting of cement paste.

The oxides in fusion interact with each other to form a series of more complex products and form the cement clinker.

## 5.4 COMPOSITION OF CEMENT CLINKER

The various constituents combine in burning and form cement clinker. The compounds formed in the burning process have the properties of setting and hardening in the presence of water. They are known as *Bogue compounds* after the name of Bogue who identified them. Le-Chatelier and Tornebohm have referred these compounds as Alite ($C_3S$), Belite ($C_2S$), Celite ($C_3A$) and Felite ($C_4AF$). The following Bogue compounds are formed during clinkering process.

| *The principal mineral compounds in Portland cement* | *Formula* | *Name* | *Symbol* |
|---|---|---|---|
| 1. Tricalcium silicate | $3CaO \cdot SiO_2$ | Alite | $C_3S$ |
| 2. Dicalcium silicate | $2CaO \cdot SiO_2$ | Belite | $C_2S$ |
| 3. Tricalcium aluminate | $3CaO \cdot Al_2O_3$ | Celite | $C_3A$ |
| 4. Tetracalcium alumino ferrite | $4CaO \cdot Al_2O_3 \cdot Fe_2O_3$ | Felite | $C_4AF$ |

The properties of Portland cement varies markedly with the proportions of the above four compounds, reflecting substantial difference between their individual behaviour.

***Tricalcium Silicate*** is supposed to be the best cementing material and is well burnt cement. It is about 25-50% (normally about 40 per cent) of cement. It renders the clinker easier to grind, increases resistance to freezing and thawing, hydrates rapidly generating high heat and develops an early hardness and strength. However, raising of $C_3S$ content beyond the specified limits increases the heat of hydration and solubility of cement in water. The hydrolysis of $C_3S$ is mainly responsible for 7 day strength and hardness. The rate of hydrolysis of $C_3S$ and the character of gel developed are the main causes of the hardness and early strength of cement paste. The heat of hydration is 500 J/g.

***Dicalcium Silicate*** is about 25-40% (normally about 32 per cent) of cement. It hydrates and hardens slowly and takes long time to add to the strength (after a year or more). It imparts resistance to chemical attack. Raising of $C_2S$ content renders clinker harder to grind, reduces early strength, decreases resistance to freezing and thawing at early ages and decreases heat of hydration. The hydrolysis of $C_2S$ proceeds slowly. At early ages, less than a month, $C_2S$ has little influence on strength and hardness. While after one year, its contribution to the strength and hardness is proportionately almost equal to $C_3S$. The heat of hydration is 260 J/g.

***Tricalcium Aluminate*** is about 5-11% (normally about 10.5 per cent) of cement. It rapidly reacts with water and is responsible for flash set of finely grounded clinker. The rapidity of action is regulated by the addition of 2-3% of gypsum at the time of grinding cement. Tricalcium aluminate is responsible for the initial set, high heat of hydration and has greater tendency to volume changes causing cracking. Raising the $C_3A$ content reduces the setting time, weakens resistance to sulphate attack and lowers the ultimate strength, heat of hydration and contraction during air hardening. The heat of hydration of 865 J/g.

***Tetracalcium Alumino Ferrite*** is about 8–14% (normally about 9 per cent) of cement. It is responsible for flash set but generates less heat. It has poorest cementing value. Raising the $C_4AF$ content reduces the strength slightly. The heat of hydration is 420 J/g.

***Calculation of Compound Composition of Portland Cement:*** Bogue developed a method for calculating the compound composition from the oxide analysis of a cement. This method is based upon cooling of the clinker at such rate that equilibrium is maintained. Although equilibrium does not usually obtain in commercial operations, valuable information can be derived from such calculations. The method is summarized in the following steps and in Table 5.2. An accurate chemical analysis is entered in the first column of the table as shown.

**Table 5.2 Record of Significant Data for Computing Compound Composition**

| *Oxides* | *Analysis* | *Compounds* | | | | | |
|---|---|---|---|---|---|---|---|
| | | *Free CaO* | *$SO_3$+* | *$Fe_2O_3$+* | *$Al_2O_3$+* | *c and s* | *$C_2S$ and $C_4$* |
| CaO | 63.0 | 0.2 | $c_1 = 1.0$ | $c_2 = 4.9$ | $c_3 = 5.4$ | $c = 51.5$ | $c_4 = 10.3$ |
| MgO | 3.0 | | | | | | |
| $Al_2O_3$ | 5.5 | . . . . . | . . . . . | $a_1 = 2.2$ | $a_2 = 3.3$ | | |
| $Fe_2O_3$ | 3.5 | . . . . . | . . . . . | 3.5 | | | |
| $SiO_2$ | 22.0 | . . . . . | . . . . . | . . . . . | . . . . . | $s = 22.0$ | 63.2 approx. |
| $SO_3$ | 1.5 | . . . . . | 1.5 | | | | |
| Ig. Loss | 1.2 | | | | | | |
| Ins. Res. | 0.1 | | | | | | |
| Free CaO | 0.2 | | | | | | |

| Ignition Loss | Free MgO | Free CaO | $CaSO_4$ | $C_4AF$ | $C_3A$ | $C_3S$ | $C_2S$ |
|---|---|---|---|---|---|---|---|
| 1.2 | 3.0 | 0.2 | 2.5 | 10.6 | 8.7 | 42 | 32 |

Since the ratio of the atomic weight of CaO : $SO_3$ = 56.07 : 80.065 = 0.70:1, each percentage of $SO_3$ combines with 0.70 per cent of Cao to form 1.70 per cent of $CaSO_4$. Hence, the percentage of lime required to satisfy $SO_3$ (= 0.7 × per cent $SO_3$) is recorded as $c_1$ in column 4 of the table, opposite CaO; the percentage of $SO_3$ is also entered in column 4; and the $CaSO_4$ content is summed and entered at the bottom of column 4.

Similarly, since the atomic ratios $Al_2O_3$ : $Fe_2O_3$ = 101.92 : 159.68 = 0.64 : 1 and 4CaO : $Fe_2O_3$ = 224.28 : 159.68 = 1.40 : 1, it is evident that each percentage of $Fe_2O_3$ enters into combination with 0.64 per cent of $Al_2O_3$ and 1.40 per cent of CaO to form 3.04 per cent of $4CaO \cdot Al_2O_3 \cdot Fe_2O_3$. Therefore 0.64 × percentage of $Fe_2O_3$ is entered as $a_1$, opposite $Al_2O_3$ in column 5, and 1.4 × percentage of $Fe_2O_3$ is entered as $c_2$, opposite CaO in column 5; the percentage of $Fe_2O_3$ is re-entered in the same column; and the percentage of $C_4AF$ is summed at the bottom.

Since practically none of the magnesia is combined, it is entered as free at the bottom of column 2.

The total alumina minus $a_1$, entered as $a_2$ in column 6, is available to combine with lime to form $C_3A$ in the ratio 3CaO : $Al_2O_3$ = 168.21 : 101.92 is 1.65 : 1. Hence, each percentage of this available alumina × 1.65 is the percentage of CaO required for $C_3A$, and it is entered opposite CaO as $c_3$ in column 6. Summing quantities in column 6 gives percentage of $C_3A$.

The CaO available to combine with $SiO_2$ is total CaO minus (free CaO + $c_1 + c_2 + c_3$); call this difference $c$. Then the total silica ($s$) is calculated first to combine with CaO to form $C_2S$. Since the ratio $2CaO \cdot SiO_2 : SiO_2 = 172.20 : 60.06 = 2.87:1$, each percentage of $s \times 2.87$ is the percentage of $C_2S$. This first approximation of $C_2S$ is entered in column 8, opposite $SiO_2$. By subtracting this value of $C_2S$ from the sum $s + c$, the amount of CaO (called $c_4$) available for combination with $2CaO \cdot SiO_2$ to form $3CaO \cdot SiO_2$ is determined. Since the ratio $3CaO \cdot SiO_2 : CaO = 228.27:56.07 = 4.07:1$, multiplying $c_4$ by 4.07 gives the amount of $C_3S$ which is entered at the foot of column 7. By subtracting this value of $C_3S$ from $c + s$, the true percentage of $C_2S$ is found and entered in column 8.

Should the computed percentage of $C_3S$ be greater than $c + s$, no $C_2S$ is present. In that case the content of $C_3S$ is found from the ratio $3CaO \cdot SiO_2 : SiO_2 = 228.27 : 60.06 = 3.8 : 1$. Hence, the percentage of $C_3S$ is obtained by multiplying the percentage of $SiO_2$ by 3.8. This latter value of $C_3S$, subtracted from $c + s$, gives the percentage of uncombined lime. This last condition can only be obtained when lime is in excess of the amount required for equilibrium and the free lime has not been deducted.

Since errors in chemical analysis of 0.2 per cent in determinations of lime, alumina, silica, or iron oxide will make errors up to 1.5 per cent in certain compounds, percentages for the compounds should be rounded off to whole numbers. If the ignition loss is high, the analysis should be reduced to a clinker basis prior to compound calculations.

As previously mentioned, Bogue's method of calculation is based on the assumption that the clinker is slowly cooled at such rate that equilibrium is maintained and the crystallization is complete. Lea and Parker have shown that values calculated by the bogue method may be considerably in error if the clinker liquid crystallizes independently of the solids formed, or if cooling is so sudden that no crystallization takes place and glass is formed. For the case of independent crystallization and a clinkering temperature of 1400°C, they show that Bogue's method is correct for cements with $Al_2O_3/Fe_2O_3$ ratios between 0.9 and 1.7, but for ratios between 1.7 and 6.1 their corrections to be added are :

$$C_3S, + (1.8Al_2O_3 - 2.8Fe_2O_3)$$
$$C_2S, + (2.1Fe_2O_3 - 1.4Al_2O_3)$$
$$C_3A, + (2.5Fe_2O_3 - 1.6Al_2O_3)$$
$$C_4AF, \text{Nil}$$

Thus for a cement with $Al_2O_3 = 7$ and $Fe_2O_3 = 3$ per cent, the correction to $C_3S = 4.2$, to $C_2S = -3.5$, and to $C_3A = -3.7$ per cent.

For very rapid cooling of the clinker, the liquid is formed into glass and they show that *no* $C_3A$ or $C_4AF$ appear but the amount of glass is + $(2.95Al_2O_3 + 2.2Fe_2O_3)$. For this case their corrections to Bogue's values for $C_3S$ and $C_2S$ are: $C_3S$, + $(1.8Al_2O_3 - 2.8Fe_2O_3)$; $C_2S$ + $(1.9Fe_2O_3 - 2.1Al_2O_3)$.

## 5.5 HYDRATION OF CEMENT

The chemical reaction between cement and water is known as *hydration* of cement. The reaction takes place between the active components of cement ($C_4AF$, $C_3A$, $C_3S$ and $C_2S$) and water. The factors responsible for the physical properties of concrete are the extent of hydration of cement and the resultant microstructure of the hydrated cement.

When the cement comes in contact with water, the hydration products start depositing on the outer periphery of the nucleus of hydrated cement. This reaction proceeds slowly for 2-5 hours and is called *induction* or *dormant period.* As the hydration proceeds, the deposit of hydration products on the original cement grain makes the diffusion of water to unhydrated nucleus more and more difficult, consequently reducing the rate of hydration with time. At any stage of hydration, the cement paste consists of gel (a fine-grained product of hydration having large surface area collectively), the unreacted cement, calcium hydroxide, water and some minor compounds.

The crystals of the various resulting compounds gradually fill the space originally occupied by water, resulting in the stiffening of the mass and subsequent development of the strength. The reactions of the compounds and their products are as follows:

$$C_3S + H_2O \rightarrow C\text{–}S\text{–}H^* + Ca\,(OH)_2$$

$$C_2S + H_2O \rightarrow C\text{–}S\text{–}H + Ca\,(OH)_2 \qquad \begin{bmatrix} H^* & \text{is} & H_2O \\ \bar{S} & \text{is} & SO_3 \end{bmatrix}$$

$$C_3A + H_2O \rightarrow C_3AH_6$$

$$C_3A + H_2O + CaSO_4 \rightarrow CA\,C\bar{S}\,H_{12}$$

Calcium sulpho-aluminate

$$C_4AF + H_2O \rightarrow C_3AH_6 + CFH$$

The product C–S–H gel represents the calcium silicate hydrate also known as *tobermorite gel* which is the gel structure. The hydrated crystals are extremely small, fibrous, platey or tubular in shape varying from less than 2 mm to 10 mm or more. The C–S–H phase makes up 50–60% of the volume of solids in a completely hyderated Portland cement paste and is, therefore, the most important in determining the properties of the paste. The proposed surface area for C–S–H is of the order of 100–700 $m^2/g$ and the solid to solid distance being about 18 Å. The $Ca(OH)_2$ liberated during the silicate phase crystallizes in the available free space. The calcium hydroxide crystals also known as portlandite consists of 20-25% volume of the solids in the hydrated paste. These have lower surface area and their strength contributing potential is limited. The gel must be saturated with water if hydration is to continue. The calcium hydroxide crystals formed in the process dissolve in water providing hydroxyl ($OH^-$) ions, which are important for the protection of reinforcement in concrete. As hydration proceeds, the two crystal types become more heavily interlocked increasing the strength, though the main cementing action is provided by the gel which occupies two-thirds of the total mass of hydrate.

***Notes :***

1. **It has been found that hydration of $C_3S$ produces lesser calcium silicate hydrate and more $Ca(OH)_2$ as compared to the hydration of $C_2S$. Since $Ca(OH)_2$ is soluble in water and leaches out making the concrete porous, particularly in hydraulic structures, a cement with small percentage of $C_3S$ and more $C_2S$ is recommended for use in hydraulic structures.**
2. **It is particularly important to note that the setting (the change of cement paste from plastic to stiff solid state) and hardening (gain of strength with hydration is a chemical reaction, wherein water plays an important role, and is not just a matter of drying out. Infact, setting and hardening stop as soon as the concrete becomes dry.**

## 5.6 RATE OF HYDRATION

The reaction of compound $C_3A$ with water is very fast and is responsible for flash setting of cement (stiffening without strength development) and thus it will prevent the hydration of $C_3S$ and $C_2S$. However, calcium sulphate ($CaSO_4$) present in the clinker dissolves immediately in water and forms insoluble calcium sulphoaluminate. It deposits on the surface of $C_3A$ forming a colloidal membrane and consequently retards the hydration of $C_3A$. The amount of $CaSO_4$ is adjusted to leave a little excess of $C_3A$ to hydrate directly. This membrane in the process breaks because of the pressure of the compounds formed during hydration and then again $C_3A$ becomes active in the reaction.

The hardening of $C_3S$ can be said to be catalyzed by $C_3A$ and $C_3S$ becomes solely responsible for gain of strength up to 28 days by growth and interlocking of C-S-H gel. The increase in strength at later age is due to hydration of $C_2S$.

***Notes:*** **1. The development of strength of the four principal compounds of cement with age is shown in Fig. 5.1.**

**2. The rate of heat evolution of the compounds if equal amount of each is considered will be in the following descending order:**
**$C_3A, C_3S, C_4AF, C_2S$**

**3. The rate of hydration is increased by an increase in fineness of cement. However, total heat evolved is the same. The rate of hydration of the principal compounds is shown in Fig. 5.2 and will be in the following descending order:**
**$C_4AF, C_3A, C_3S, C_2S$**

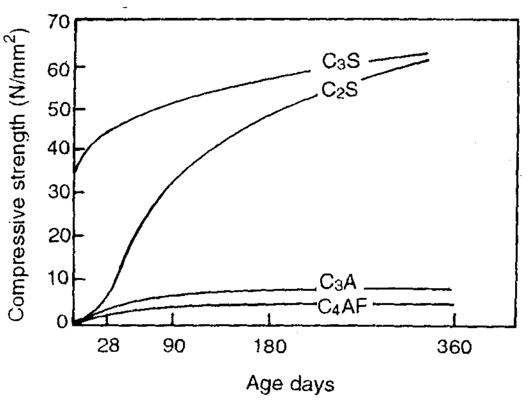

**Fig. 5.1 Contribution of Cement Compounds to Strength of Cement**

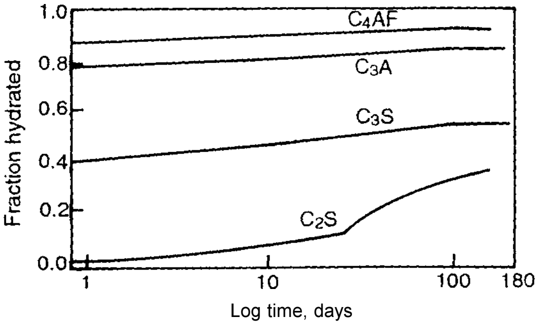

**Fig. 5.2 Rate of Hydration of Pure Cement Compounds**

## 5.7 WATER REQUIREMENT FOR HYDRATION

About an average 23 per cent (24 per cent $C_3S$, 21 per cent $C_2S$) of water by weight of cement is required for complete hydration of Portland cement. This water combines chemically with the cement compounds and is known as *bound water.* Some quantity of water, about 15 per cent by weight of cement, is required to fill the cement gel pores and is known as *gel water.* Therefore, a total of 38 per cent of water by weight of cement is required to complete the chemical reaction. The general belief that a water/cement ratio less than 0.38 should not be used in concrete because for the process of hydration, the gel pores should saturated – is not valid. This is because as even if excess water is present, complete hydration of cement never takes place due to deposition of hydration products. As a matter of fact water/cement ratio less than 0.38 is very common for high strength concretes. If excess water is present, it will lead to capillary cavities.

## 5.8 MANUFACTURE OF CEMENT

Calcareous and argillaceous raw materials are used in the manufacture of Portland cement. The calcareous materials used are cement rock, limestone, marl, chalk and marine shell. The argillaceous materials consist of silicates of alumina in the form of clay, shale, slate and blast furnace slag.

From the above materials, others like lime, silica, alumina, iron oxide and small quantities of other chemicals are obtained. Cement can be manufactured either by dry process or wet process.

### Dry Process

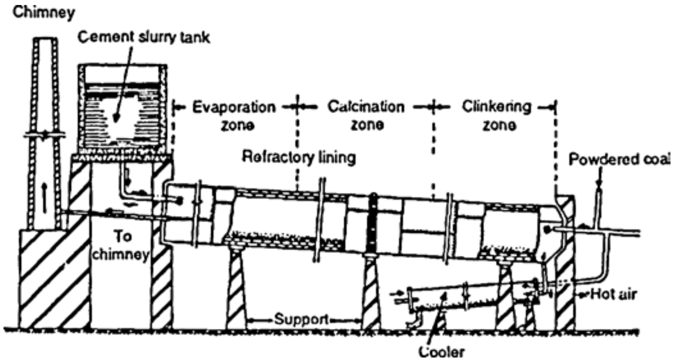

Fig. 5.3 Rotary Kiln

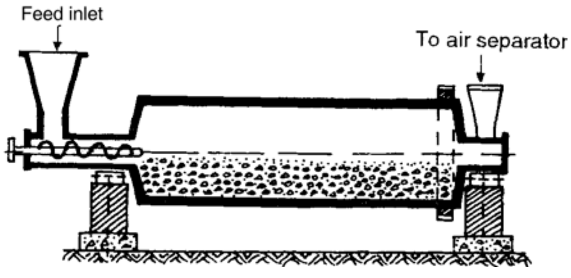

Fig. 5.4 Rotary Kiln

The dry process is adopted when the raw materials are quite hard. The process is slow and the product is costly. Limestone and clay are ground to fine powder separately and are mixed. Water is added to make a thick paste. The cakes of this paste, which contain about 14 per cent of moisture, are dried and are charged into rotary kiln (Fig. 5.3). The product obtained after calcination in rotary kiln is called *clinker*. The clinker is obtained as a result of incipient fusion and sintering at a temperature of about 1400°-1500°C. Because ferric oxide has lower melting point than the other oxides, it acts as a flux. Aeration of cement clinker, which is commonly practised to slake free lime, also causes an absorption of some moisture and carbon dioxide. Absorption of moisture tends to decrease the setting whereas that of carbon dioxide accelerates setting. The clinker is cooled rapidly to preserve the metastable compounds and their solid solutions — dispersion of one solid in another — which are made as the clinker is heated. Clinker is then cooled and ground in tube mills (Fig. 5.4),

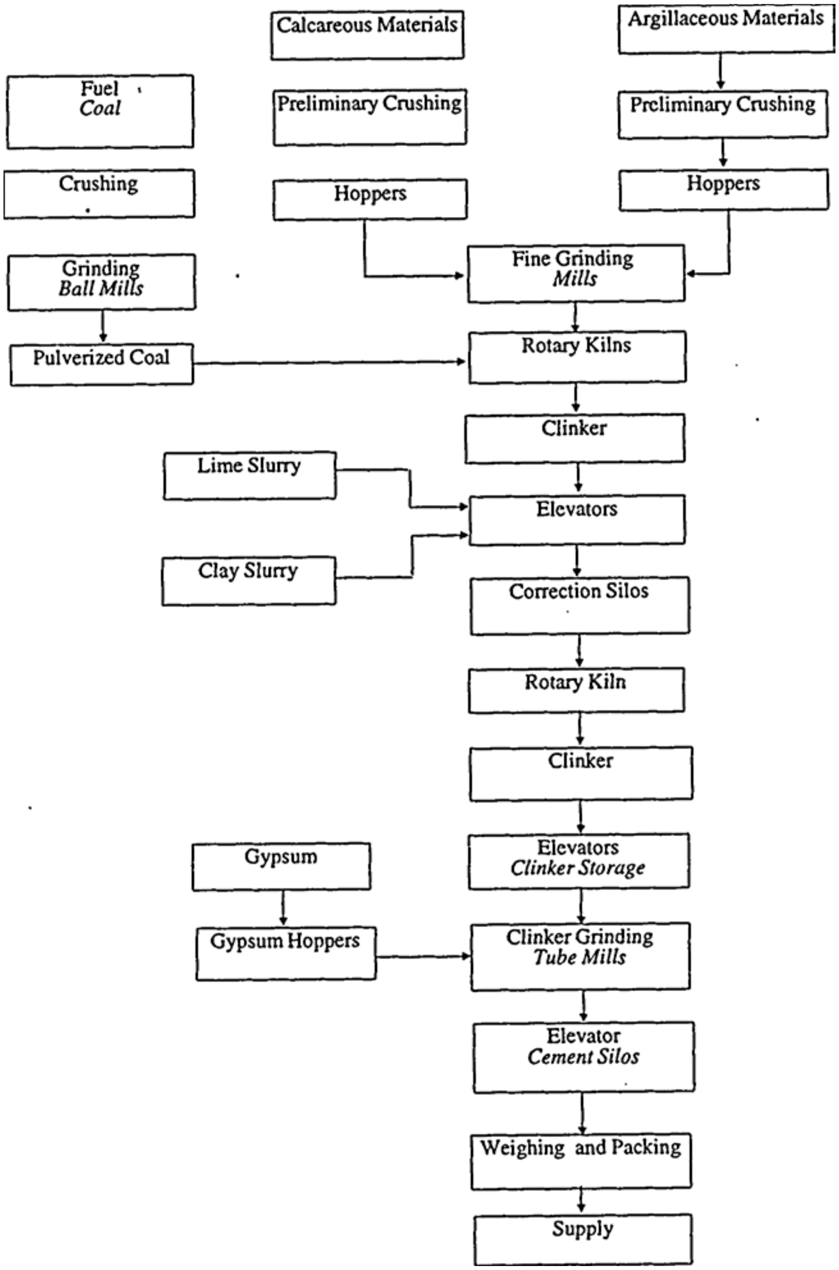

**Fig. 5.5 Flow Diagram of Cement Manufacture—Dry Process**

where 2-3% of gypsum is added. Generally, cement is stored in bags of 50 kg. A flow diagram of dry process is shown in Fig. 5.5. The purpose of adding gypsum is to coat the cement particles by interfering with the process of hydration of the cement particles. This retards the setting of cement.

## Wet Process

The operations in the wet process of cement manufacture are mixing, burning and grinding. The crushed raw materials are fed into ball mill (Fig. 5.6) and a little water is added. On operating the ball mill, the steel balls in it pulverize the raw materials which form a slurry with water. This slurry is passed to silos (storage tanks), where the proportioning of the compounds is adjusted to ensure desired chemical composition. The corrected slurry having about 40 per cent moisture content, is then fed into rotary kiln (Fig. 5.4) where it loses moisture and forms into lumps or nodules. These are finally burned at 1500-1600°C. The nodules change to clinker at this temperature. Clinker is cooled and then ground in tube mills. While grinding the clinker, about 3 per cent gypsum is added. The cement is then stored in silos from where it is supplied. A flow diagram of manufacturing cement by wet process is shown in Fig. 5.7.

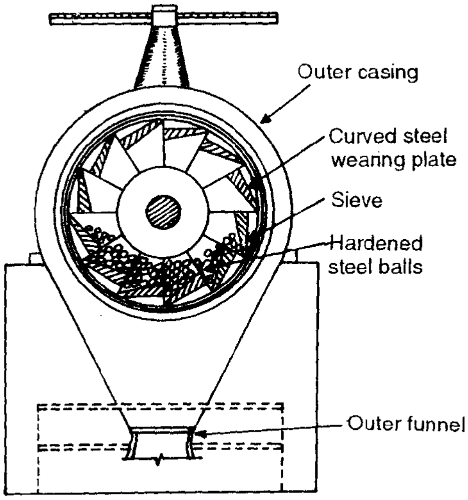

**Fig. 5.6 Ball Mill**

**Comparison of Wet and Dry Process:** The chief advantages of the wet process are the low cost of excavating and grinding raw materials, the accurate control of composition and homogeneity of the slurry, and the economical utilization of fuel through the elimination of separated drying operations. On the other hand the longer kilns, essential in the wet process, cost more and are less responsive to a variable clinker demand than the short kilns which can be used in the dry process.

## 5.9 TESTING OF CEMENT

Experience has shown that it is practically impossible to make large quantities of cement without any variation in quality. To be sure, some mills working with raw materials which run very uniformly and using the best of equipment and methods of operation will have very few unsuccessful 'burns' in a year, whereas others will be less fortunate. Nevertheless the consumer has little chance of ascertaining how his particular consignment of cement was made; therefore, if he has under way a construction of any importance, he ought to satisfy himself regarding the quality of his purchase. He should test his cement not only to see that he gets what he has paid for but also to forestall the possibility of a failure through the use of defective material.

In engineering construction the main qualifications demanded of a cement are permanency of structure, strength, and a rate of setting suitable to the demands of the work. To determine these qualifications, both physical and chemical tests are made, the former, on account of importance, more often than the latter.

As a result of long experience the physical tests which have come into general use in determining the acceptability of cement are: (1) soundness or constancy of volume, (2) strength, (3) time of set or activity, and (4) fineness. In order that the results of such tests made by different parties may accord as nearly as possible, it is necessary that a standard method be rigidly adhered to and that only experienced operators, who fully appreciate the necessity of eliminating personal equation from all manipulations, be employed.

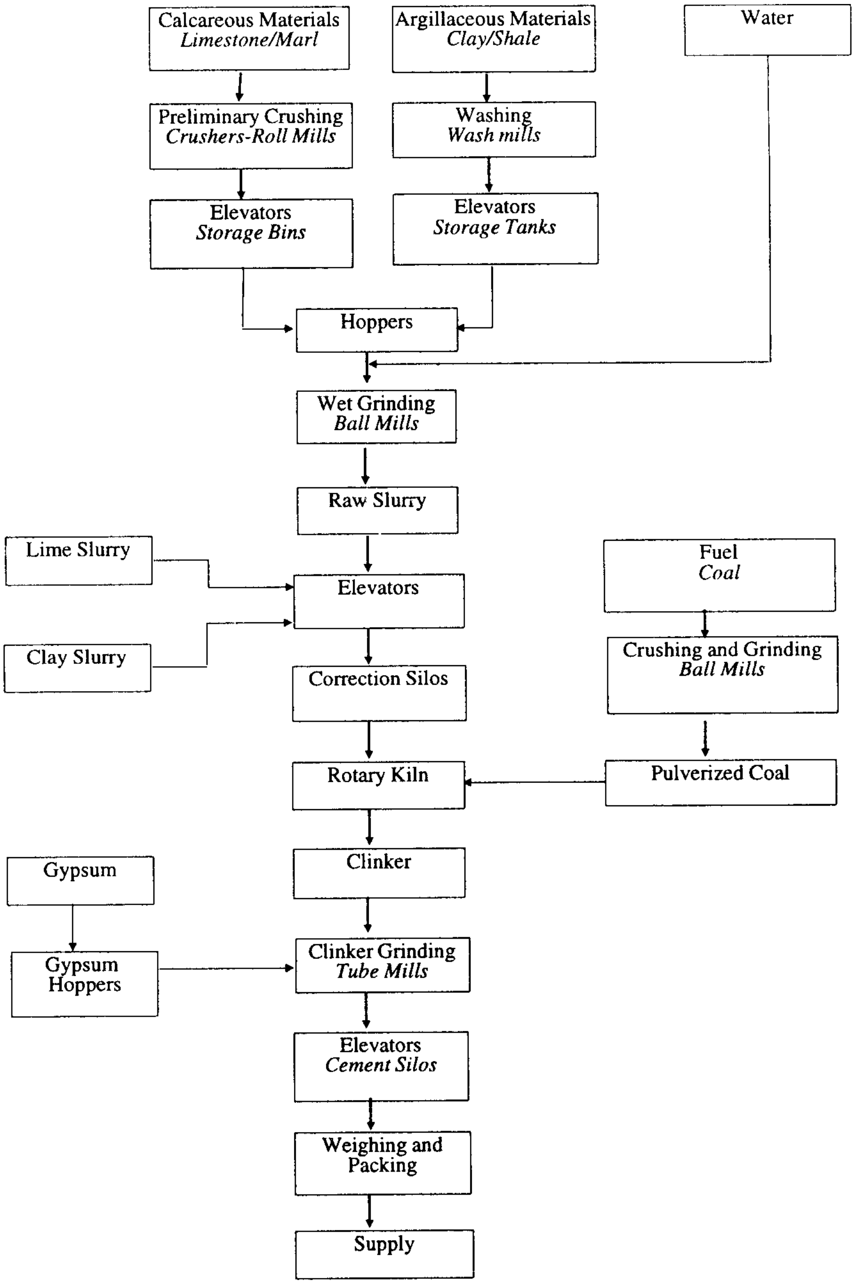

Fig. 5.7 Flow Diagram of Cement Manufacture—Wet Process

## Physical Tests (IS: 4031)

### Fineness Test

The degree of fineness of cement is the measure of the mean size of the grains in it. There are three methods for testing fineness: the sieve method—using 90 micron (9 No.) sieve, the air permeability method— Nurse and Blains method and the sedimentation method— Wagner turbidimeter method. The last two methods measure the surface area, whereas the first measures grain size. Since cement grains are finer than 90 micron, the sieve analysis method does not represent true mean size of cement grains. Also, the tiny cement grains tend to conglomerate into lumps resulting in distortion in the final grain size distribution curves. Considering these demerits, fineness is generally expressed in terms of specific area, which is the total surface area of the particles in unit weight of material.

*Conditions Affecting Fineness:* The chemical composition and the degree of calcination influence the hardness of the clinker and consequently the fineness to which the cement is ground. Clinker, high in iron or silica, is apt to be hard and difficult to grind. The same is true with a hard-burned clinker. Fineness is also influenced by the time of grinding and the character of the pulverizing machinery. It has been found that cement becomes finer with age provided it does not absorb too much moisture. This is probably due to the decrepitation of the coarser grains resulting from the hydration of the embedded lime particles.

*Importance:* Finer the cement, more is the strength since surface area for hydration will be large. With increase in fineness, the early development of strength is enhanced but the ultimate strength is not affected. An increase in the fineness of the cement increases the cohesiveness of the concrete mix and thus reduces the amount of water which separates to the top of a lift (bleeding), particularly while compacting with vibrators. However, if the cement is ground beyond a certain limit, its cementative properties are affected due to the prehydration by atmospheric moisture. Finer cement reacts more strongly in alkali reactive aggregate. Also, the water requirement and workability will be more leading to higher drying shrinkage and cracking.

***Sieve Method***: 100 g of cement sample is taken and air-set lumps, if any, in the sample are broken with fingers. The sample is placed on a 90 micron sieve and continuously sieved for 15 minutes. The residue should not exceed the limits specified below:

| *Type of cement* | *Percentage of residue by weight* | *Specific surface ($m^2/kg$) not less than* |
|---|---|---|
| 1. Ordinary Portland Cement (OPC) | 10 | 225 |
| 2. Rapid Hardening Cement (RHC) | 5 | 325 |
| 3. Portland Puzzolana Cement (PPC) | 5 | 300 |

***Air Permeability Method:*** The fineness of cement is represented by specific surface, i.e. total surface area in $cm^2$ per gram or $m^2$ per kilogram of cement and is measured by Lea and Nurse apparatus or by wagner turbidimeter..

The Lea and Nurse apparatus shown in Fig. 5.8 essentially consists of a permeability test cell—where cement is placed and air pressure is applied, flowmeter—to determine the quantity of air passing per second through its capillary tube per unit difference of pressure, and manometer—to measure the air pressure.

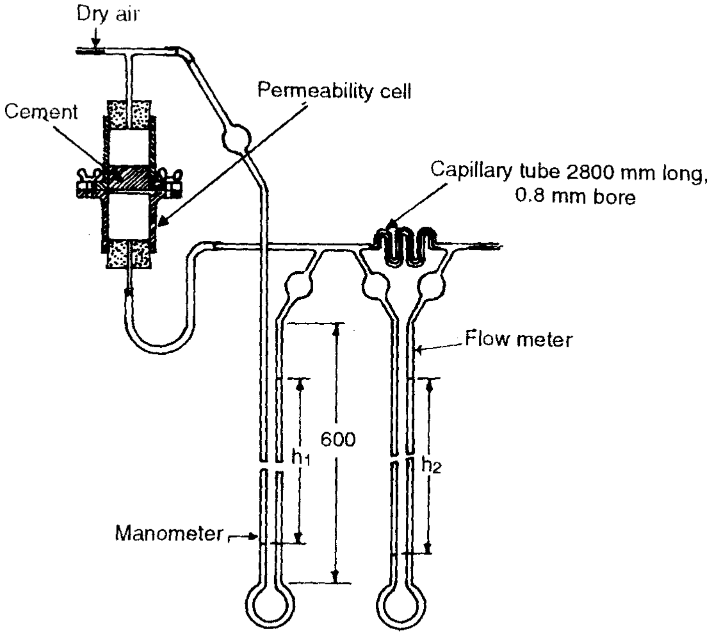

**Fig. 5.8 Permeability Apparatus**

To determine the fineness, a cement sample of 20 mm height is placed on a perforated plate (40 micron perforations) and air pressure is applied. The manometer is connected to the top of the permeability cell and the air is turned on. The lower end of the permeability cell is then slowly connected to the other end of the manometer. The rate of flow is so adjusted that the flowmeter shows a pressure difference ($h_2$) of 30-50 cm. The reading ($h_1$) in the manometer is recorded. The process is repeated till the ratio $h_1 / h_2$ is constant. The specific surface is given by the expression

$$S = \frac{14}{d(1-\Psi)} \sqrt{\frac{A\Psi^2}{KL}} \sqrt{\frac{h_1}{h_2}}$$

where $L$ = thickness of cement layer
$A$ = area of cement layer
$d$ = density of cement
$\Psi$ = porosity of cement (0.475)
$h_2$ = flowmeter reading
$h_1$ = manometer reading

K is the flowmeter constant and is obtained by

$$Q = \frac{K h_2 d_1}{\mu}$$

where $\mu$ = viscosity of air
$d_1$ = density of kerosene
$Q$ = quantity of air passed per second

$$= \frac{V}{t}\,\frac{P-p}{P}$$

where P = atmospheric pressure

p = vapour pressure of water at room temperature

The minimum specific surface for various cements should be as specified in Table 5.3.

**Table 5.3 Minimum Specific Surfaces of Cements**

| *Type of cement* | | *Specific surface not less than $cm^2/g$* |
|---|---|---|
| Ordinary Portland Cement | (OPC) | 2250 |
| Rapid Hardening Cement | (RHC) | 3250 |
| Low Heat Cement | (LHC) | 3250 |
| Portland Puzzolana Cement | (PPC) | 3000 |
| High Alumina Cement | (HAC) | 2250 |
| Super Sulphate Cement | (SSC) | 4000 |

***Wagner Turbidimeter Method:*** L.A.Wagner developed a turbidimeter to estimate the surface area of one gram of cement. The cement is dispersed uniformly in a rectangular glass tank filled with kerosene. Then, parallel light rays are passed through the solution which strike the sensitivity plate of a photoelectric cell. The turbidity of the solution at a given instant is measured by taking readings of the current generated by the cell. By recording the readings at regular intervals while the particles are falling in the solution, it is possible to secure information regarding the grading in surface area and in size of particle. Readings are expressed in sq. cm per gram.

## Consistency Test

This is a test to estimate the quantity of mixing water to form a paste of normal consistency defined as that percentage water requirement of the cement paste, the viscosity of which will be such that the Vicat's plunger penetrates up to a point 5 to 7 mm from the bottom of the Vicat's mould.

*Importance:* The water requirement for various tests of cement depends on the normal consistency of the cement, which itself depends upon the compound composition and fineness of the cement.

*Test Procedure:* 300 g of cement is mixed with 25 per cent water. The paste is filled in the mould of Vicat's apparatus (Fig. 5.9) and the surface of the filled paste is smoothened and levelled. A square needle 10 mm x 10 mm attached to the plunger is then lowered gently over the cement paste surface and is released quickly. The plunger pierces the cement paste. The reading on the attached scale is recorded. When the reading is 5-7 mm from the bottom of the mould, the amount of water added is considered to be the correct percentage of water for normal consistency.

## Determination of Initial and Final Setting Times

When water is added to cement, the resulting paste starts to stiffen and gain strength and lose the consistency simultaneously. The term setting implies solidification of the plastic cement paste. Initial and final setting times may be regarded as the two stiffening states of the cement. The beginning of solidification, called the initial set, marks the point in time when the paste has become unworkable. The time taken to solidify completely marks the final set, which should not be too long in order to resume construction activity within a reasonable time after the placement of concrete. Vicat's apparatus used for the purpose is shown in Fig. 5.9. The initial setting time may be defined as the time taken by the paste to stiffen to such an extent that the Vicat's needle is not permitted to move down through the paste to within 5 ± 0.5 mm measured from the bottom of the mould. The final setting time is the time after which the paste becomes so hard that the angular attachment to the needle, under standard weight, fails to leave any mark on the hardened concrete. Initial and final setting times are the rheological properties of cement.

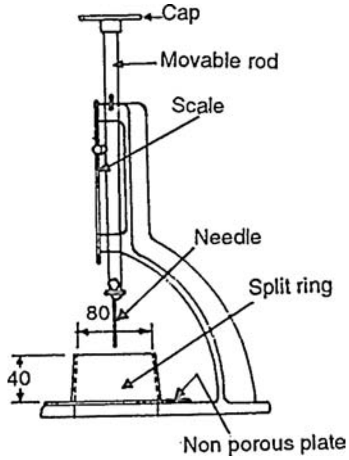

**Fig. 5.9 Vicat's Apparatus**

*Importance:* It is important to know the initial setting time, because of loss of useful properties of cement if the cement mortar or concrete is placed in moulds after this time. The importance of final setting time lies in the fact that the moulds can be removed after this time. The former defines the limit of handling and the latter defines the beginning of development of machanical strength.

*Conditions Affecting Setting Time:* The factors influencing the setting properties of cement are its composition, the percentage of retardant, degree of calcination, fineness of grinding, aeration subsequent to grinding clinker, percentage of water used to make cement paste, the temperature of the mixing water, cement and the atmosphere where the cement paste is placed, and the amount of manipulation the paste receives.

The effect of lime, silica and alumina in controlling the set have been discussed in Sec. 5.3. The effect of gypsum is to increase the setting time of freshly ground cement. It is usually mixed with the clinker before final grinding, or just after the clinker has received preliminary grinding. The addition of gypsum before calcination causes it to decompose into lime and sulphur trioxide. Since the latter is liberated in the kiln, there is resulting effect on the setting time. Often, an underlimed cement becomes quick setting after seasoning. This can be avoided by adding to the cement 1 or 2 per cent of hydrated lime or the fraction of a per cent of Plaster of Paris. Setting time of cement is rapid with the increase in the fineness of cement. When the mixing water used in testing cement paste is increased by 1 per cent above that required for normal consistency, an increase of about 30 minutes or more is observed in the initial or final set.

Cements stored in warm rooms will, in general, be quick setting than those stored in cold places. Cold mixing water retards set while warm water accelerates it. Cement exposed to thoroughly saturated atmosphere will set much more slowly than those exposed to a dry atmosphere. If, however, a considerable proportion of moist $CO_2$ is present in the air, the setting time is found to reduce greatly. By lengthening the time of mixing and by prolonged troweling of the surface mortars, it is also possible to considerably delay the setting time.

*Test Procedure:* A neat cement paste is prepared by gauging cement with 0.85 times the water required to give a paste of standard consistency. The stop watch is started at the instant water is added to the cement. The mould resting on a nonporous plate is filled completely with cement paste and the surface of filled paste is levelled smooth with the top of the mould. The test is conducted at room temperature of 27± 2°C. The mould with the cement paste is placed in the Vicat's apparatus as shown in Fig. 5.9 and the needle is lowered gently in contact with the test block and is then quickly released. The needle thus penetrates the test block and the reading on the Vicat's apparatus graduated scale is recorded. The procedure is repeated until the needle fails to pierce the block by about 5 mm measured from the bottom of the mould. The stop watch is pushed off and the time is recorded which gives the initial setting time.

The cement is considered to be finally set when upon applying the needle gently to the surface of test block, the needle makes an impression, but the attachment fails to do so.

### Soundness Test

It is essential that the cement concrete does not undergo large change in volume after setting. This is ensured by limiting the quantities of free lime and magnesia which slake slowly causing change in volume of cement (known as unsound). Soundness of cement may be tested by Le-Chatelier method or by autoclave method. For OPC, RHC, LHC and PPC it is limited to 10 mm, whereas for HAC and SSC it should not exceed 5 mm.

*Importance:* It is a very important test to assure the quality of cement since an unsound cement produces cracks, distortion and disintegration, ultimately leading to failure.

*Conditions Affecting Soundness:* The main cause for unsoundness in Portland cement is the hydration of the uncombined lime encased within the cement particles. Exposed, finely ground, free lime in small percentages, hydrates before the cement sets and produces no injurious effect. The uncombined lime in cement is a result of either underburning the clinker or of excess lime in the raw materials. Freshly ground cement is often unsound due to the presence of uncombined lime. Cement is thus allowed to aerate for two to three weeks, allowing the lime to hydrate, to overcome unsoundness.

Fine grinding of the raw material and clinker help to produce a sound cement. By grinding fine the raw materials, it is possible to produce a homogeneous mixture before burning where the lime is uniformly distributed. The coarse grains of cement may imprison minute particles of uncombined lime which do not hydrate. These lime particles on hydralion produce disintegration.

***Le-chatelier Method:*** The apparatus is shown in Fig. 5.10. The mould is placed on a glass sheet and is filled with neat cement paste formed by gauging 100 g cement with 0.78 times the water required to give a paste of standard consistency. The mould is covered with a glass sheet and a small weight is placed on the covering glass sheet. The mould is then submerged in the water at temperature of 27°-32°C. After 24 hours, the mould is taken out and the distance separating the indicator points is measured. The mould is again submerged in water. The water is now boiled for 3 hours. The mould is removed from water and is cooled down. The distance between the indicator points is measured again. The difference between the two measurements represents the unsoundness of cement.

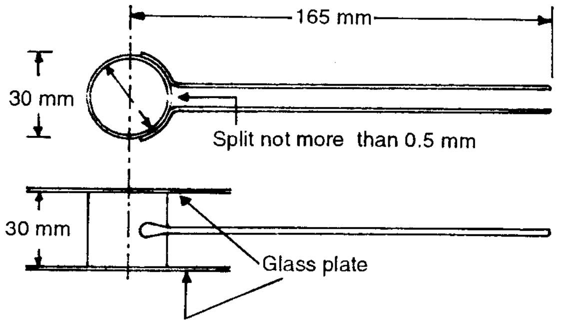

**Fig. 5.10 Le-chatelier Apparatus**

***Autoclave Test:*** The 25 × 25 × 250 mm specimen is made with neat cement paste. After 24 hours the moulded specimen is removed from the moist atmosphere, measured for length, and so placed in an autoclave at room temperature that the four tides of each specimen are at least exposed to saturated steam. The temperature of the autoclave is raised at such a rate that the gauge pressure of the steam rises to 2.1 $N/mm^2$ in 1 to 1 ¼ hours from the time the heat is turned on. The pressure is maintained for 3 hours. Then the heat supply is shut off and the autoclave is cooled at such a rate that the pressure is less than 0.1$N/mm^2$ at the end of the hour. The autoclave is then opened and the test specimens are placed in water at temperature of 90°C.The temperature is gradually brought down to 27±2°C in 15 minutes. The specimens are maintained at this temperature for next 15 minutes and are then taken out. The length of the specimen is measured again. The difference in the two measurements gives the unsoundness of the cement.

## Determination of Strength

Cement hydrates when water is added to it and cohesion and solidity is exhibited. It binds together the aggregates by adhesion. The strength of mortar and concrete depends upon the type and nature of cement. So, it should develop a minimum specified strength if it is to be used in structures. Cement is tested for compressive and tensile strengths.

*Conditions Affecting Strength:* Cement is very strong at early ages if a high lime or high alumina content is there. Gypsum and Plaster of Paris in small percentages also tend to increase the strength slightly, but when present in quantities larger then 3 per cent, these substances provide variable effects. The effect of the clinker compounds on strength have already been discussed in Sec 5.4. In addition to the effect of composition, the strength of cement is greatly influenced by the degree of burning, the fineness of grinding, and the aeration it receives subsequent to final grinding. An underburnt cement is likely to be deficient in strength.

***Compressive Strength:*** Compressive strength is the basic data required for mix design. By this test, the quality and the quantity of concrete can be cotrolled and the degree of adulteration can be checked.

The test specimens are 70.6 mm cubes having face area of about 5000 sq. mm. Large size specimen cubes cannot be made since cement shrinks and cracks may develop. The temperature of water and test room should be 27°± 2°C. A mixture of cement and standard sand in the proportion 1:3 by weight is mixed dry with a trowel for one minute and then with water until the mixture is of uniform colour. Three specimen cubes are prepared. The material for each cube is mixed separately. The quantities of cement, standard sand and water are 185 g, 555 g and (P / 4) + 3.5, respectively where P = percentage of water required to produce a paste of standard consistency. The mould is filled completely with the cement paste and is placed on the vibration table. Vibrations are imparted for about 2 minutes at a speed of 12000±400 per minute.

The cubes are then removed from the moulds and submerged in clean fresh water and are taken out just prior to testing in a compression testing machine. Compressive strength is taken to be the average of the results of the three cubes. The load is applied starting from zero at a rate of 35 N / sq mm / minute. The compressive strength is calculated from the crushing load divided by the average area over which the load is applied.The result is expressed in N / mm$^2$. The minimum specified strength for some of the cements is given in Table 5.4.

**Table 5.4 Minimum Specified Strength in N/mm$^2$**

| *Type/Days* | *1 day* | *3 days* | *7 days* | *28 days* |
|---|---|---|---|---|
| Ordinary Portland cement (33 grade) | - | 16.0 | 22.0 | 33.0 |
| Portland Puzzolana cement | - | 16.0 | 22.0 | 33.0 |
| Low heat Portland cement | - | 10.0 | 16.0 | 35.0 |
| Rapid hardening cement | 16.0 | 27.5 | - | - |
| High alumina cement | 30.0 | 35.0 | - | - |

***Tensile Strength:*** The tensile strength may be determined by Briquette test method or by split tensile strength test.

***Importance:*** The tensile strength of cement affords quicker indications of defects in the cement than any other test. Also, the test is more conveniently made than the compressive strength test. Moreover, since the flexural strength, is directly related to the tensile strength this test is ideally fitted to give information both with regard to tensile and compressive strengths when the supply for material testing is small.

***Briquette Method:*** A mixture of cement and sand is gauged in the proportion of 1:3 by weight. The percentage of water to be used is calculated from the formula (P/5) + 2.5, where P = percentage of water required to produce a paste of standard consistency. The temperature of the water and the test room should be 27° ± 2°C. The mix is filled in the moulds of the shape shown in Fig. 5.11.

After filling the mould, an additional heap of mix is placed on the mould and is pushed down with the standard spatula, until the mixture is level with the top of the mould. This operation is repeated on the other side of the mould also. The briquettes in the mould are finished by smoothing the surface with the blade of a trowel. They are then kept for 24 hours at a temperature of 27° ± 2°C and in an atmosphere having 90 per cent humidity. The briquettes are then kept in clean fresh water and are taken out before testing. Six briquettes are tested and the average tensile strength is calculated. Load is applied steadily and uniformly, starting from zero and increasing at the rate of 0.7 N / sq mm of section in 12 seconds.

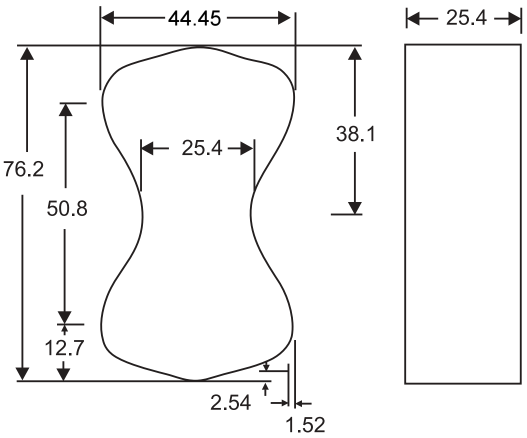

**Fig. 5.11 Dimensions of Standard Briquette**

Ordinary Portland cement should have a tensile strength of not less than 2.0 N / mm$^2$ after 3 days and not less than 2.5 N / mm$^2$ after 7 days.

*Notes:* **(i) In the tension test of cement the load on the briquette should be applied centrally. Since briquettes become brittle with age, the effect of slight eccentricity or any torsional strain is pronounced in long-time tests.**

**(ii) The strength increases when the loading rate is increased from that specified.**

## Heat of hydration

Heat is evolved during hydration of cement, the amount being dependent on the relative quantities of the clinker compounds.

*Importance:* The evolution of heat causes an increase in temperature of the concrete, being greatest in mass concreting. Since the cooling of a mass of concrete can only occur from surfaces exposed to atmosphere the temperature of the interior is higher than that at the surface and also there is a rapid increase in strength in the interior than at the surface. Shrinkage cracks may result from stresses, induced by cooling of the surface while the interior of concrete is still at higher temperature. However, in practice, the heat evolution may be taken to its advantage in cold weather provided the concrete is warm at the time of placing and excessive heat loss is prevented by suitable lagging.

*Test Procedure:* The apparatus used to determine the heat of hydration of cement is known as calorimeter and is shown in Fig. 5.12. 60 g of cement and 24 ml of distilled water are mixed for 4 minutes at temperature 15°–25°C. Three specimen glass vials 100 × 20 mm are filled with this mixture, corked and sealed with wax. The vials are then stored with the mixture in a vertical position at 27°±2° C. The heat of hydration is obtained by subtracting the respective heat of solution of unhyrated cement calculated nearest to 0.1 calorie.

For determining the heat of solution of unhydrated cement, weigh a sample of about 3 g. At the same time, weigh out 7.0 g of cement for the loss on ignition. The heat of solution is calculated as

Heat of solution (Cal/g) of unhydrated cement

$$= \frac{\text{Heat capacity} \times \text{corrected temperature rise}}{\text{Weight of sample corrected for ignition loss}} - 0.2(\varphi_0 - \varphi)$$

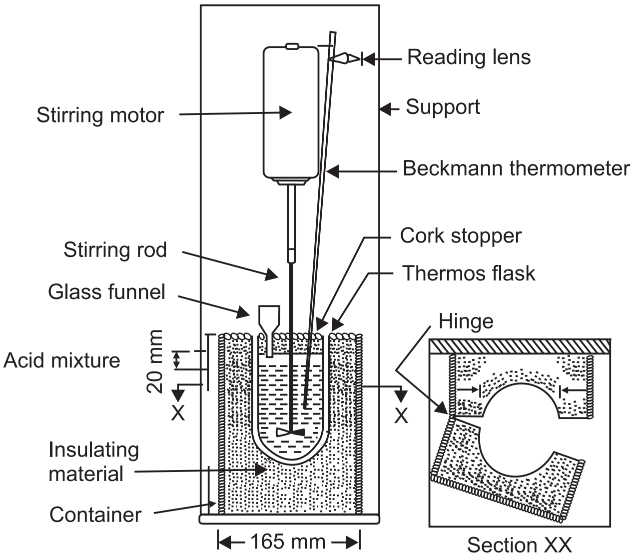

**Fig. 5.12 Calorimeter**

where 0.2 is the specific heat of unhydrated cement.

For determining heat of solution of the hydrated cement, one of the glass vials is opened and the adherent wax is removed. The cement is ground rapidly, to avoid carbonation, to pass an 850 micron sieve. From this weigh out 4.2 g and 7.0 g of cement samples for heat of solution and loss on ignition.

The heat of solution of hydrated cement (Cal/g ignited weight)

$$= \frac{\text{Heat capacity} \times \text{corrected temperature rise}}{\text{Weight of sample corrected for ignition loss}} - 0.4(\varphi_0 - \varphi)$$

The ignition loss can be obtained by placing the sample in a cool furnace and raising the temperature of the furnace to 900°C over a period of 1 hour. The sample is kept at 900° ± 50°C for 3-4 hours and then cooled in a desiccator containing anhydrous calcium chloride. Weigh after half an hour. The difference in the two weighings give the loss on ignition.

To determine the heat capacity sufficient quantity of zinc oxide is ignited for one hour at 900° ± 50°C. It is cooled in a desiccator containing anhydrous calcium chloride and ground to pass 250 micron sieve. About 7 g of this ignited oxide is reheated to 900° ± 50°C for 5 minutes and then cooled for about 2½ hours (not more than 5 hours). The calorimeter is assembled and temperature reading correct to 0.001°C is recorded to determine the initial heating or cooling correction. The zinc oxide is then introduced. The temperature readings are recorded at one minute intervals until the solution is complete. The recording of readings is continued for next 5 minutes to determine the final heating or cooling correction. The initial and final heating or cooling rates against the corresponding calorimeter temperature are plotted. The two points thus obtained are joined by a straight line. From this graph the corrections are read off for each temperature reading during the solution period. Heat capacity is calculated from the expression.

$$\text{Heat capcity (Cal/°C)} = \frac{\text{Weight of ZnO}}{\text{Corrected temperature rise}} \times [256.1 + 0.1(30.0 - \psi_0) + 0.1(\psi_0 - \psi)]$$

$$= \frac{\text{Weight of ZnO }(259.1 - 0.2\psi + 0.1\psi_0)}{\text{Corrected temperature rise}}$$

where, 256.1 is the heat of solution of zinc oxide at 30°C and 0.2 the negative temperature coefficient of the heat of solution, $\psi$ is the final temperature of the calorimeter, 0.1 is the specific heat of zinc oxide and $\psi_0$ is the room temperature in °C.

## Specific Gravity Test

The specific gravity of hydraulic cement is obtained using Le-Chatelier flask shown in Fig. 5.13.

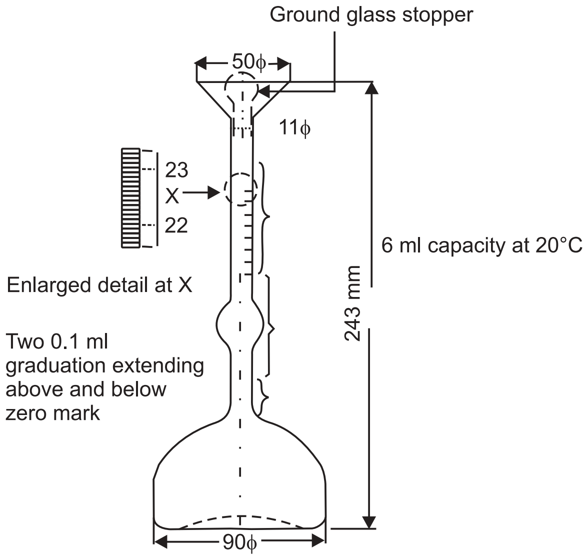

**Fig. 5.13 Le-Chatelier Flask for Specific Gravity Test**

*Conditions Affecting Specific Gravity:* Long seasonig is the chief cause of a low specific gravity in unadulterated cement. This is because the freshly ground cement when exposed to air rapidly absorbs moisture and carbon dioxide. Cements with high contents of iron oxide have a higher specific gravity. The effect of fineness of grinding upon specific gravity is slight. Very finely ground cements are likely to have lower specific gravities.

*Test Procedure:* The flask is filled with either kerosene free of water, or naphtha having a specific gravity not less than 0.7313 to a point on the stem between zero and 1-ml mark. The flask is immersed in a constant temperature water bath and the reading is recorded. A weighed quantity of cement (about 64 g of Portland cement) is then introduced in small amounts at the same temperature as that of the liquid. After introducing all the cement, the stopper is placed in the flask and the flask rolled in an inclined position, or gently whirled in a horizontal circle, so as to free the cement from air until no further air bubbles rise to the surface of the liquid. The flask is again immersed in the water-bath and the final reading is recorded. The difference between the first and the final reading represents the volume of liquid displaced by the weight of the cement used in the test.

$$\text{Specific gravity} = \frac{\text{Weight of cement}}{\text{Displaced volume of liquid in ml}}$$

### Chemical Tests (IS: 4032)

***Loss on ignition:*** 1.00 g of the sample is heated for 15 minutes in a weighed and covered platinum crucible of 20 to 25 ml capacity by placing it in a muffle furnace at any temperature between 900° and 1000°C. It is then cooled and weighed. Thereafter, the loss in weight is checked by a second heating for 5 minutes and reweighing. The loss in the weight is recorded as the loss on ignition and the percentage of loss on ignition to the nearest 0.1 is calculated (loss in weight × 100). The percentage loss on ignition should not exceed 4 per cent.

***Silica:*** 0.5 g of the sample is kept in an evaporating dish, moistened with 10 ml of distilled water at room temperature to prevent lumping. To this 5 to 10 ml of hydrochloric acid is added, and digested with the aid of gentle heat and agitation until solution is complete. Dissolution may be aided by light pressure with the flattened end of a glass rod. The solution is evaporated to dryness on a steam bath. Without heating the residue any further, it is treated with 5 to 10 ml of hydrochloric acid and then with an equal amount of water. The dish is covered and digested for 10 minutes on a water bath. The solution with an equal volume of hot water is diluted and is immediately filtered through an ashless filter paper, and the separated silica ($SiO_2$) is washed thoroughly with hot water and the residue is reserved.

The filtrate is again evaporated to dryness, baking the residue in an oven for one hour at 105°C to 110°C. Then the residue is added with 10 to 15 ml of hydrochloric acid (1:1) and is heated on a water bath. This solution is then diluted with an equal volume of hot water and the small amount of silica it contains is filtered and washed on another filter paper. The filtrate and washings are reserved for the determination of combined alumina and the ferric oxide.

The papers containing the residues are transferred to a weighed platinum crucible. The papers are dried and ignited, first at a low heat until the carbon of the filter papers is completely consumed without inflaming, and finally at 1100°C to 1200°C until the weight remains constant (say $W_1$).

The ignited residue thus obtained, which will contain small amounts of impurities is treated in the crucible with a few drops of distilled water, about 10 ml of hydrofluoric acid and one drop of sulphuric acid and evaporated cautiously to dryness. Finally, the small residue is heated at 1050°C to 1100°C for a minute or two: cooled and weighed (say $W_2$). The difference between this weight and the weight of the ignited residue represents the amount of silica (W).

$$\text{Silica (\%)} = 200\,(W_1 - W_2)$$

***Combined Ferric Oxide and Alumina:*** 200 ml of the sample from the filtrate reserved in silica test is heated to a boil. A few drops of bromine water or concentrated nitric acid is added during boiling in order to oxidize any ferrous ion to the ferric condition. It is then treated with ammonium hydroxide (1:1), drop by drop, until the solution smells of ammonia. The solution containing the precipitates of aluminium and ferric hydroxides is boiled for one minute. The precipitate is allowed to settle, filtered through an ashless filter paper and washed with two per cent hot ammonium nitrate solution. The filtrate and washings are set aside.

The precipitate and the filter paper is transferred to the same beaker in which the first precipitation was effected. The precipitate is then dissolved in hydrochloric acid (1:3). The solution is diluted to about 100 ml and the hydroxides are reprecipitated. The solution is filtered and precipitated with two 10 ml portions of hot ammonium nitrate solution. The filtrate and washings are then combined with the filtrate set aside and is reserved for the determination of calcium oxide.

The precipitate is placed in a weighed platinum crucible, heated slowly until the papers are charred, and finally ignited to constant weight at 1050°C to 1100°C with care to prevent reduction, and weighed ($W_1$) as combined alumina and ferric oxide.

If silica is suspected to be carried into the filtrate used for this estimation, the residue in the crucible is treated with a drop of water, about 5 ml of hydrofluoric acid and a drop of sulphuric acid and is evaporated cautiously to dryness. Finally, the crucible is heated at 1050°C to 1100°C for one or two minutes; cooled and weighed ($W_2$). The difference between this weight and the weight ($W_1$), represents the amount of residue silica. This amount is subtracted from the weight of ferric oxide and alumina found as $W_1$ and the same amount is added to the amount of silica (W). The ratio of percentages of alumina to iron oxide should not exceed 0.66.

Combined ferric oxide and alumina (%) = weight of residue × 200

***Ferric Oxide:*** 40 ml of cold water is added to 1 g of the sample and while the mixture is stirred vigorously, 50 ml of hydrochloric acid is added. If necessary, the solution is heated and cement is ground with flattened end of a glass rod until it is evident that cement is completely decomposed. The solution is heated to a boil and is treated with stannous chloride solution added drop by drop while stirring, until the solution is dicolourized. A few drops of stannous chloride solution is added in excess and the solution is cooled to room temperature. Then, 15 ml of a saturated solution of mercuric chloride and 25 ml of manganese sulphate solution are added and titrated with standard solution of potassium permanganate until the permanent pink colour is obtained. Iron as ferric oxide is calculated.

***Alumina:*** The calculated weight of ferric oxide and the small amount of silica is subtracted from the total weight of oxides ($W_l$). The remainder is the weight of alumina and of small amounts of other oxides reported as alumina.

***Calcium Oxide:*** The combined filtrate reserved in the combined ferric oxide and alumina test is acidified with hydrochloric acid and evaporated to a volume of about 100 ml. 40 ml of saturated bromine water is added to the hot solution and ammonium hydroxide is added until the solution is distinctly alkaline. The solution is boiled for 5 minutes or more, making certain that the solution is at all times distinctly alkaline. Then the precipitate is allowed to settle, filtered and washed with hot water. The beaker and filter is washed once with nitric acid (1:33) and finally with hot water. Any precipitate (of manganese dioxide) that may be left on the tunnel is discarded. The filtrate is mixed with hydrochloric acid and boiled until all the bromine is expelled. 25 ml of boiling ammonium oxalate solution is added to the boiling solution. The solution is made alkaline with ammonium hydroxide and brought to boiling, the boiling being continued until the precipitated calcium oxalate assumes a well-defined, granular form. The precipitate is allowed to stand for about 20 minutes or until it has settled, filtered and washed moderately with ammonium oxalate solution (one gram per litre). The filtrate and washings ($W_3$) are set aside for estimating magnesia.

The precipitated lime after ignition and heating at 1100°C-1200°C is weighed. The percentage of CaO = weight of residue × 200. Also,

$$\frac{\text{CaO} - 0.7\text{SO}_3}{2.8\ \text{SiO}_2 + 1.2\ \text{Al}_2\text{O}_3 + 0.65\ \text{Fe}_2\text{O}_3}$$

in per cent should not be less than 0.66.

***Magnesia:*** The filtrate ($W_3$) is acidified with hydrochloric acid and is concentrated to about l50 ml. To this solution, about 10 ml of ammonium hydrogen phosphate solution (250 g per litre) is added and the solution is cooled by placing in a beaker of ice water. After cooling, ammonium hydroxide is added drop by drop, while stirring constantly, until the crystalline magnesium ammonium phosphate begins to form, and then the reagent is added in moderate excess (5 to 10 per cent of the volume of the solution), the stirring being continued for several minutes. The solution is set aside for at least 16 hours in a cool atmosphere and then filtered. The precipitate is washed with ammonium nitrate wash solution (100 g of ammonium nitrate dissolved in water, 200 ml of ammonium hydroxide added and diluted to one litre). It is then charred slowly and the resulting carbon is burnt carefully. The precipitate is ignited at 1100°C to 1200°C to constant weight, taking care to avoid bringing the pyrophosphate to melting.

From the weight of the magnesium pyrophosphate obtained, the magnesia content of the material taken for the test is calculated.

The percentage of MgO = weight of residue × 72.4.

Free magnesia in cement should be less than 4 per cent.

***Sulphuric Anhydride:*** To one gram of the sample, 25 ml of cold water is added and while the mixture is stirred vigorously 5 ml of hydrochloric acid is added. If necessary, the solution is heated and the material is ground with the flattened end of a glass rod until it is evident that the decomposition of cement is complete. The solution is diluted to 50 ml and digested for 15 minutes. The residue is filtered and washed thoroughly with hot water. The filter paper with the residue ($W_4$) is set aside. The filtrate is diluted to 250 ml and heated to boiling. 10 ml of hot barium chloride (100 g per litre) solution is added drop by drop and the boiling is continued until the precipitate is well formed. The solution is digested on steam bath for 4 hours or preferably overnight. The precipitate is filtered and the precipitate is washed thoroughly. The filter paper and the contents are placed in a weighed platinum or porcelain crucible and slowly the paper is incinerated without inflaming. Then it is ignited at 800°C to 900°C, cooled in a desiccator and the barium sulphate is weighed. From the weight of the barium sulphate obtained, the sulphuric anhydride content of the material taken for the test is calculated. The percentage of $SO_3$ = weight of residue × 34.3. Sulphur in cement should be less than 2.5 per cent.

***Insoluble Residue:*** The filter paper containing the residue ($W_4$) is digested in 30 ml of hot water and 30 ml of 2 N sodium carbonate solution maintaining constant volume, the solution being held for 10 minutes at a temperature just short of boiling. It is then filtered and washed with dilute hydrochloric acid (1:99) and finally with hot water till free from chlorides. The residue is ignited in a crucible at 900°C to 1000°C, cooled in a desiccator and weighed. The insoluble residues should not exceed 1.5 per cent.

## 5.10 TYPES OF CEMENT

Cements of unique characteristics for desired performance in a given environment are being manufactured by changing the chemical composition of OPC or by using additives, or by using different raw materials. Some of the cements available in the market are as follows.

***Rapid Hardening Portland Cement*** **(IS: 8041)** has high lime content and can be obtained by increasing the $C_3S$ content but is normally obtained from OPC clinker by finer grinding (450 $m^2/kg$). The basis of application of rapid hardening cement (RHC) is hardening properties and heat emission rather than setting rate. This permits addition of a little more gypsum during manufacture to control the rate of setting. RHC attains same strength in one day which an ordinary cement may attain in 3 days. However, it is subjected to large shrinkage and water requirement for workability is more. The cost of rapid hardening cement is about 10 per cent more than the ordinary cement. Concrete made with RHC can be safely exposed to frost, since it matures more quickly.

| *Properties:* | | |
|---|---|---|
| | Initial setting time | 30 minutes (minimum) |
| | Final setting time | l0 hours (maximum) |
| | Compressive strength | |
| | 1 day | 16.0 $N/mm^2$ |
| | 3 day | 27.5 $N/mm^2$ |

*Uses:* It is suitable for repair of roads and bridges and when load is applied in a short period of time.

***High Alumina Cement (IS: 6452):*** This is not a type of Portland cement and is manufactured by fusing 40 per cent bauxite, 40 per cent lime, 15 per iron oxide with a little of ferric oxide and silica, magnesia, etc. (Table 5.5) at a very high temperature. The alumina content should not be less than 32%. The resultant product is ground finely. The main cement ingredient is monocalcium aluminate CA which interacts with water and forms dicalcium octahydrate hydroaluminate and aluminium oxide hydrate.

$$2(CaO.AL_2O_3.10H_2O) + H_2O = 2CaO.Al_2O_3.8H_2O + 2Al(OH)_2$$

The dicalcium hydroaluminate gel consolidates and the hydration products crystallise. The rate of consolidation and crystallisation is high leading to a rapid gain of strength. Since $C_3A$ is not present, the cement has good sulphate resistance.

**Table 5.5 Composition of a Typical High Alumina Cement**

| *Composition* | *Percentage* |
|---|---|
| $Al_2O_3$, $TiO_2$ | 43.5 |
| $Fe_2O_3$, FeO, $Fe_3O_4$ | 13.1 |
| CaO | 37.5 |
| $SiO_2$ | 3.8 |
| MgO | 0.3 |
| $SO_3$ | 0.4 |
| Insoluble material | 1.2 |
| Loss on ignition | 0.2 |

*Properties:* It is not quick setting: initial setting time (minimum) is 30 minutes, even up to 2 hours. The final setting time should not exceed 600 minutes. It attains strength in 24 hours, high early strength, high heat of hydration and resistance to chemical attack. Compressive strength after one day is 30.0 $N/mm^2$ and after 3 days it is 35.0 $N/mm^2$. After setting and hardening, there is no free hydrated lime as in the case of ordinary Portland cement. The fineness of the cement should not be less than 225 $m^2/kg$. The cement should not have expansion more than 5 mm.

*Uses:* It is resistant to the action of fire, sea water, acidic water and sulphates and is used as refractory concrete, in industries and is used widely for precasting. It should not be used in places where temperature exceeds 18°C.

***Supersulphated Portland Cement (IS: 6909)*** is manufactured by intergrinding or intimately blending a mixture of granulated blast furnace slag not less than 70 per cent, calcium sulphate and small quantity of 33 grade Portland cement. In this cement tricalcium aluminate which is susceptible to sulphates is limited to less than 3.5 per cent. Sulphate resisting cement may also be produced by the addition of extra iron oxide before firing; this combines with alumina which would otherwise form $C_3A$, instead forming $C_4AF$ which is not affected by sulphates. It is used only in places with temperature below 40°C.

Water resistance of concretes from supersulphate Portland cements is higher than that of common Portland cements because of the absence of free calcium oxide hydrate. In supersulphate Portland cements the latter is bound by slag into calcium hydroaluminates of low solubility and calcium hydrosilicates of low basicity, whereas concretes from Portland cement carry a large amount of free calcium oxide hydrate which may wash out and thus weaken them. Supersulphate Portland cement has satisfactory frost and air resistances, but it is less resistant than concrete from Portland cement due to the fact that hydrosilicates of low basicity show greater tendency to deformation from humidity fluctuations and resist the combined action of water and frost less effectively.

*Properties:* It has low heat of hydration and is resistant to chemical attacks and in particular to sulphates. Compressive strength should be as follows:

$72 \pm 1$ hour $\nless$ 15 $N/mm^2$
$168 \pm 2$ hours $\nless$ 22 $N/mm^2$
$672 \pm 4$ hours $\nless$ 30 $N/mm^2$

It should have a fineness of 400 $m^2/kg$. The expansion of cement is limited to 5 mm. The initial setting time of the cement should not be less than 30 minutes, and the final setting time should not be more than 600 minutes.

*Uses:* Supersulphated Portland cement is used for similar purpose as common Portland cement. But owing to its higher water-resisting property, it should be preferred in hydraulic engineering installations and also in constructions intended for service in moist media. RCC pipes in ground water, concrete structures in sulphate bearing soils, sewers carrying industrial effluents, concrete exposed to concentrated sulphates of weak mineral acids are some of the examples of this cement. This cement should not be used in constructions exposed to frequent freezing-and-thawing or moistening-and-drying conditions.

***Sulphate Resisting Portland Cement (IS: 12330):*** In this cement the amount of tricalcium aluminate is restricted to on acceptably low value(< 5). It should not be mistaken for super-sulphated cement. It is manufactured by grinding and intimately mixing together calcareous and argillaceous and/ or other silica, alumina and iron oxide bearing materials. The Materials are burnt to clinkering temperature. The resultant clinker is ground to produce the cement. No material is added after burning except gypsum and not more than one per cent of air-entraining agents are added.

*Properties:* The specific surface of the cement should not be less than 225 $m^2/kg$. The expansion of cement is limited to 10 mm and 0.8 per cent, when tested by Le-chatelier method and autoclave test, respectively. The setting times are same as that for ordinary Portland cement. The compressive strength of the cubes should be as follows.

| | |
|---|---|
| 72 ± 1 hour | $\nless$ 10 $N/mm^2$ |
| 168 ± 2 hours | $\nless$ 16 $N/mm^2$ |
| 672 ± 4 hours | $\nless$ 33 $N/mm^2$ |

It should have a fineness of 400 $m^2/kg$. The expansion of cement is limited to 5 mm. The initial setting line of the cement should not be less than 30 mm and the final setting time should not be more than 600 mm.

This cement can be used as an alternative to order Portland cement or Portland pozzolana cement or Portland slag cement under normal conditions. Its use however is restricted where the prevailing temperature is below 40°C. Use of sulphate resisting cement is particularly beneficial in conditions where the concrete is exposed to the risk of deterioration due to sulphate attack; concrete in contact with soils or ground waters containing excessive sulphate as well as concrete in sea water or exposed directly to sea coast.

***Portland slag Cement (IS: 455):*** It is manufactured either by intimately intergrinding a mixture of Portland cement clinker and granulated slag with addition of gypsum or calcium sulphate, or by an intimate and uniform blending of Portland cement and finely ground granulated slag. Slag is a non-metallic product consisting essentially of glass containing silicates and alumino-silicates of lime and other bases, as in the case of blast-furnace slag, which is developed simultaneously with iron in blast furnace or electric pig iron furnace. Granulated slag is obtained by further processing the molten slag by rapid chilling or quenching it with water or steam and air. The slag constituent in the cement varies between 25 to 65 per cent.

*Properties:* The chemical requirements of Portland slag cement are same as that of 33 grade Portland cement. The specific surface of slag cement should not be less than 225 $m^2/kg$. The expansion of the cement should not be more than 10 mm and 0.8 per cent when tested be Le Chatelier method and autoclave test, respectively. The initial and final setting times and compressive strength requirements are same as that for 33 grade ordinary Portland cement.

*Uses:* This cement can be used in all places where OPC is used. However, because of its low heat of hydration it can also be used for mass concreting, e.g., dams, foundations, etc.

***Low Heat Portland Cement (IS:12600)*** To limit the heat of hydration of low heat Portland cement (LHC), the tricalcium aluminate component in cement is minimised and a high percentage of dicalcium silicate and tetracalcium alumino ferrite is added. The heat of hydration should not be more than 272 and 314 J/g at the end of 7 and 28 days respectively. The rate of development of strength is slow but the ultimate strength is same as that of OPC. To meet this requirement, specific surface of cement is increased to about 3200 $cm^2/g$.

*Properties:* Less heat is evolved during setting low heat Portland cement. When tested by Le Chatelier method and autoclave test the expansion should not be more than 10 mm and 0.8%, respectively. The minimum initial setting time should not be less than 60 minutes, and the final setting should not be more than 600 minutes.

The compressive strength should be as follows.

| | |
|---|---|
| 72 ± 1 hour | $\nless$ 10 N/mm$^2$ |
| 168 ± 2 hours | $\nless$ 16 N/mm$^2$ |
| 672 ± 4 hours | $\nless$ 35 N/mm$^2$ |

*Uses:* It is most suitable for large mass concrete works such as dams, large raft foundations, etc.

***Portland Puzzolana Cement (IS: 1489 (Part I):*** It is manufactured by grinding Portland cement clinker and puzzolana (usually fly ash 10-25% by mass of PPC) or by intimately and uniformly blending Portland cement and fine puzzolana. Puzzolana (burnt clay, shale, or fly ash) has no cementing value itself but has the property of combining with lime to produce a stable lime-puzzolana compound which has definite cementitious properties. Free lime present in the cement is thus removed. Consequently, the resistance to chemical attack increases making it suitable for marine works. The hardening of Portland puzzolana cement consists in hydration of Portland cement clinker compounds and then in interaction of the puzzolana with calcium hydroxide released during the hardening of clinker. At the same time, calcium hydroxide is bound into a water-soluble calcium hydrosilicate according to the reaction

$$Ca(OH)_2 + SiO_2 + (n - 1)\ H_2O = CaO.SiO_2.nH_2O$$

with the effect that puzzolana Portland cement acquires greater water-resisting property than ordinary Portland cement.

*Properties:* These have lower rate of development of strength but ultimate strength is comparable with ordinary Portland cement.

| | | |
|---|---|---|
| Compressive Strength | 72 ± 1 hr | 16.0 N/mm$^2$ |
| | 168 ± 2 hrs | 22.0 N/mm$^2$ |
| | 672 ± 4 hrs | 33.0 N/mm$^2$ |

The initial and the final setting times are 30 minutes (minimum) and 600 minutes (maximum), respectively. The drying shrinkage should not be more than 0.15% and the fineness should not be less than 300 m$^2$/kg.

*Uses:* It has low heat evolution and is used in the places of mass concrete such as dams and in places of high temperature.

***Quick Setting Portland Cement:*** The quantity of gypsum is reduced and small percentage of aluminium sulphate is added. It is ground much finer than ordinary Portland cement.

*Properties:* Initial setting time = 5 minutes
Final setting time = 30 minutes

*Use:* It is used when concrete is to be laid under water or in running water.

***Masonry Cement (IS 3466):*** The Portland cement clinker is ground and mixed intimately with pozzolanic material (flyash or calcined clay), or non-pozzolanic (inert) materials (limestone, conglomrates, dolomite, granulated slag) and waste materials (carbonated sludge, mine tailings) and gypsum and air entraining plasticizer in suitable proportions. The physical requirements of masonry cement are as follows.

| | |
|---|---|
| 1. Fineness: Residue on 45-micron IS Sieve, *Max*, Percent (by wet sieving) | 15 |
| 2. Setting Time (by Vicat Apparatus): | |
| (a) Initial, *Min* | 90 min |
| (b) Final, *Max* | 24 h |
| 3. Soundness: | |
| (a) Le-Chatelier expansion, *Max* | 10 mm |
| (b) Autoclave expansion, *Max* | 1 per cent |
| 4. Compressive Strength: Average strength of not less than 3 mortar cubes of 50 mm size, composed of 1 part masonry cement and 3 parts standard sand by volume, *Min* | |
| 7 days | 2.5 MPa |
| 28 days | 5 MPa |
| 5. Air Content: Air content of mortar composed of 1 part masonry cement and 3 parts standard sand by volume, *Min* | 6 per cent |
| 6. Water Retention: Flow after suction of mortar composed of 1 part masonry cement and 3 parts standard sand by volume, *Min* | 60 per cent of original flow |

***White and Coloured Portland Cement (IS: 8042):*** It is manufactured from pure white chalk and clay free from iron oxide. Greyish colour of cement is due to iron oxide. So, the iron oxide is reduced and limited below 1 per cent. Coloured cements are made by adding 5 to 10 per cent colouring pigments before grinding. These cements have same properties as that of ordinary Portland cement and are non-staining because of low amount of soluble alkalis. Sodium alumino fluoride is added during burning which acts as a catalyst in place of iron.

*Properties:* Loss on ignition of white cement is nil. The compressive and transverse strength of this cement is 90 per cent of that of 33 grade ordinary Portland cement.

*Uses:* These cements are used for making terrazzo flooring, face plaster of walls (stucco), ornamental works, and casting stones.

***Air Entraining Cement:*** Vinsol resin or vegetable fats and oils and fatty acids are ground with ordinary cement. These materials have the property to entrain air in the form of fine tiny air bubbles in concrete.

*Properties:* Minute voids are formed while setting of cement which increases resistance against freezing and scaling action of salts. Air entrainment improves workability and water/cement ratio can be reduced which in turn reduces shrinkage, etc.

*Uses:* Air entraining cements are used for the same purposes as that of OPC.

***Calcium Chloride Cement:*** It is also known as *extra rapid hardening cement* and is made by adding 2 per cent of calcium chloride. Since it is deliquescent, it is stored under dry conditions and should be consumed within a month of its dispatch from the factory.

*Properties:* The rate of strength development is accelerated; a higher percentage of calcium chloride causes excessive shrinkage. Strength gained after 1 day is 25 per cent more and after 7 days about 20 per cent more than the ordinary Portland cement.

*Uses:* It is very suitable for cold weathers.

***Water Repellent Cement (IS: 8043):*** It is also called *hydrophobic cement*. A small amount of hydrophobic surfactants such as stearic acid, boric acid or oleic acid is mixed with the ordinary Portland cement during grinding of clinker. These substances are added in amounts of 0.1 to 0.5% of the weight of cement in terms of dry admixtures. These acids form a thin (monomolecular) film around the cement particles which prevent the entry of atmospheric moisture. The film breaks down when the concrete is mixed, and the normal hydration takes place.

When concrete is being prepared, hydrophobic admixtures plasticize the mix and contribute to the formation of uniformly distributed fine pores in concrete as it hardens and thus enhance its frost resistance. Hydrophobic cement also features greater water resistance and water impermeability.

The specific surface of hydrophobic cement should not be less than 350 $m^2/kg$. The average compressive strength should not be less than

72 ± 1 hour $\not< 15.69\ N/mm^2$
168 ± 2 hours $\not< 21.57\ N/mm^2$
672 ± 4 hours $\not< 30.40\ N/mm^2$

The weak points of hydrophobic cement are its small strength gain during the initial period because of the hydrophobic films on cement grains which prevent the interaction with water, but its 28-day strength is equal to that of ordinary Portland cement.

*Uses:* It is most suitable for basements and for making water tight concrete.

***Water Proof Cement:*** It is manufactured by adding strearates of Ca and Al and gypsum treated with tannic acid, etc. at the time of grinding.

*Property:* It is resistant to penetration of water.

*Uses:* Water retaining structures like tanks, reservoirs, retaining walls, swimming pools, bridge piers, etc.

## 5.11 STORAGE OF CEMENT

Portland cement is kept in sacks of 0.035 $m^3$ (50 kg) capacity for local use. These are stored for short period of time in air tight room avoiding moisture and dampness, at some distance from walls and at some height from floors. The stack should be covered with suitable coverings to avoid circulation of air through the stack and not more than ten bags should be stacked one over another.

## EXERCISES

1. (a) What are the ingredients of Portland cement? State the function and limits of each of them.
   (b) What tests would you specify to ensure if the cement supplied at the site is of good quality?
2. Describe with flow diagrams the dry and wet process of manufacture of cement.
3. (a) Describe the setting and hardening of cement.
   (b) Describe how the compounds of clinker affect the properties of cement.
4. (a) When will you recommend high alumina cement in preference to low heat cement?
   (b) Describe the properties of blast furnace slag cement and sulphate resisting cement.
5. What is rapid hardening cement? What is responsible for its high early strength? How does it differ from ordinary Portland cement?
6. (a) What are the initial and final setting times of cement? What is their importance?
   (b) What do you mean by normal consistency? What is its significance? How is it tested?
7. (a) What is the effect of grinding on cement? Describe the method of determining fineness by air permeability method?
   (b) How is the specific gravity of cement determined?
8. (a) What precautions should be taken while storing cement?
   (b) What is the purpose of adding gypsum while manufacturing cement?
9. (a) Differentiate between rapid hardening and slow setting cements.
   (b) What is the effect of mixing lime in cement?
   (c) Explain how cement gains strength.
10. Write short notes on
    (a) Hydration of cement (b) Clinkering
    (c) Grinding of cement (d) Use of gypsum in cement
11. Write short notes on
    (a) Compressive strength test of cement
    (b) Soundness test of cement
    (c) Split-cylinder test of cement
12. State the conditions under which you will recommend the following cements. Give also the reasons.
    (a) Puzzolana cement (b) Low heat Portland cement
    (c) High alumina cement (d) Rapid hardening cement
    (e) Quick setting cement
13. How is the cement classified? Describe the wet process of manufacturing cement.

## OBJECTIVE TYPE QUESTIONS

1. Pick out the incorrect statement
   (a) Cement is adhesive as well as cohesive material
   (b) Portland cement is of hydraulic type
   (c) For civil engineering works generally calcareous cements are used
   (d) Portland cement is an example of natural cement

2. Match List-I with List-II and select the correct answer using the codes given below the lists:

| List-I<br>(*Oxide of cement*) | List-II<br>(*Function*) |
|---|---|
| A. CaO | 1. deficiency, causes slow setting |
| B. $SiO_2$ | 2. deficiency, reduces setting time |
| C. $Al_2O_3$ | 3. excess, causes cracks |
| | 4. excess, lowers the strenghth |

Codes:

| | A | B | C | | A | B | C |
|---|---|---|---|---|---|---|---|
| (a) | 2 | 1 | 4 | (b) | 1 | 2 | 4 |
| (c) | 2 | 3 | 1 | (d) | 2 | 1 | 3 |

3. The temperature range in a cement kiln is

   (a) 500 to 1000° C (b) 1000 to 1200° C (c) 1300 to l500°C (d) 1600 to 2000°C

4. Consider the following statements:

   When cement is tested for setting time; on gauging its shows quick setting. This phenomenon known as "Flash set" of cement is due to the presence of high

   1. tricalcium Aluminate ($C_3A$) in cement
   2. alkalis in cement
   3. tricalcium silicate ($C_3S$) in cement

   Which of these statements are correct?

   (a) 1, 2 and 3 (b) 2 and 3 (c) l and 2 (d) l and 3

5. Pick out the incorrect statement.

   (a) For hydraulic structures, a cement with small percentage of $C_3S$ and more $C_2S$ is recommended.

   (b) Setting and hardening of cement stop as soon as the concrete becomes dry.

   (c) The product C-S-H gel is known as tobermorite gel.

   (d) The stiffening of cement without strength development is caused because of $C_4AF$

6. The rate of heat evolution of the following four compounds in decending order is

   1. $C_3S$ 2. $C_2S$ 3. $C_3A$ 4. $C_4AF$

   (a) 1, 2, 3, 4 (b) 3, 1 ,4, 2 (c) 3, 4, 1, 2 (d) 3, 4, 2, 1

7. The rate of heat of hydration of the four Bogue compounds in decending order is

   (a) $C_3S$, $C_2S$, $C_3A$, $C_4AF$ (b) $C_3S$, $C_3A$, $C_2S$, $C_4AF$

   (c) $C_4AF$, $C_3A$, $C_2S$, $C_3S$ (d) $C_4AF$, $C_3S$, $C_3A$, $C_2S$

8. The bound water (by weight) % required for complete hydration of cement is about

   (a) 15 (b) 23 (c) 38 (d) 40

9. Which of the following pairs is not matched correctly?

| (Cement test) | (Apparatus) |
|---|---|
| (a) Fineness | Nurse and Blains |
| (b) Consistency | Vicat |
| (c) Soundness | Le-Chatelier |
| (d) Sp. gravity | Lea and Nurse |

10. Ordinary Portland cement should have surface area not less than (in $mm^2/g \times 10^2$)
    (a) 2250 (b) 3000 (c) 3250 (d) 4000
11. To produce low heat cements, it is necessary to reduct the compound
    (a) $C_3S$ (b) $C_2S$ (c) $C_3A$ (d) $C_4AF$
12. For complete hydration of cement the w/c ratio needed is
    (a) less than 0.25
    (b) more than 0.25 but less than 0.35
    (c) more than 0.35 but less than 0.45
    (b) more than 0.45 but less than 0.60
13. High alumina cement is produced by fusing together a mixture of
    (a) limestone and bauxite
    (b) limestone, bauxite and gypsum
    (c) limestone, gypsum and clay
    (d) limestone, gypsum, bauxite, clay and chalk
14. Consider the following statements:
    High early strength of cement is obtained as a result of
    1. fine grinding
    2. decreasing the lime content
    3. burning at higher temperatures
    4. increasing the quantity of gypsum

    Of these statements
    (a) 1 and 2 are correct (b) 1 and 3 are correct
    (c) 2, 3 and 4 are correct (d) 1, 3 and 4 are correct
15. Four main oxides present in ordinary Portland cement are: CaO, $A1_2O_3$, $SiO_2$ and $Fe_2O_3$. Identify the correct ascending order of their proportions in a typical composition of OPC
    (a) $Al_2O_3$, $Fe_2O_3$, CaO, $SiO_2$ (b) $A1_2O_3$, CaO, $Fe_2O_3$, $SiO_2$
    (c) $Fe_2O_3$, $Al_2O_3$, $SiO_2$, CaO (d) $Fe_2O_3$, $SiO_2$, $Al_2O_3$, CaO
16. Match List-I with List-II and select the correct answer using the codes given below the lists:

| List-I<br>(*Type of cement*) | List-II<br>(*Characteristics*) |
|---|---|
| A. Air entraining Portland cement | 1. Suitable for very large structures |
| B. Low heat Portland cement | 2. Unsuitable for very large masses of concrete |
| C. Hydrophobic Portland cement | 3. Greater resistance to frost attack |
| D. Rapid hardening Portland cement | 4. Safe storage under unfavourable conditions of humidity |

Codes:

| | A | B | C | D |
|---|---|---|---|---|
| (a) | 4 | 2 | 1 | 3 |
| (b) | 3 | 4 | 1 | 2 |
| (c) | 3 | 1 | 4 | 2 |
| (d) | 4 | 1 | 2 | 3 |

17. Match List-I (Type of cement) with List-II (Chracteristics) and select the correct answer using the codes given below the lists:

| List-I<br>(*Type of cement*) | List-II<br>(*Characteristics*) |
|---|---|
| A. Ordinary Portland cement | 1. The percentage of $C_3S$ is a maximum and is of the order of 50% |
| B. Rapid hardening cement | 2. The percentage of $C_2S$ and $C_3S$ are the same and of the order of 40% |
| C. Low heat cement | 3. Reacts with silica during burning and causes particles to unite together and development of strength |
| D. Sulphate resistant cement | 4. Preserves the form of brick at high temperature and prevents shrinkage |

Codes:

| | | | | | | | | | |
|---|---|---|---|---|---|---|---|---|---|
| (a) | A | B | C | D | (b) | A | B | C | D |
| | 2 | 4 | 1 | 3 | | 3 | 1 | 4 | 2 |
| (c) | A | B | C | D | (d) | A | B | C | D |
| | 2 | 1 | 4 | 3 | | 3 | 4 | 1 | 2 |

18. Consider the following oxides:

1. $Al_2O_3$ 2. $CaO$ 3. $SiO_2$

The correct sequence in increasing order of their percentage in an ordinary Portland cement is

(a) 2, 1, 3 (b) 1, 3, 2 (c) 3, 1, 2 (d) 1, 2, 3

19. Consider the following statements:

High Alumina Cement

1. has highly early compressive strength and high heat of hydration than OPC 43 grade
2. is not suitable to be used in cold regions

Which of these statements is / are correct?

(a) 1 alone (b) 2 alone

(c) both 1 and 2 (d) neither 1 nor 2

20. Match List-1 (Type of cement) with List-II (Property / characteristics) and select the correct answer using the codes given below the lists:

| List-I<br>(*Type of cement*) | List-II<br>(*Property/characteristics*) |
|---|---|
| A. High strength Portland cement | 1. Should not be used with any admixture |
| B. Super sulphated cement | 2. Is extremely resistant to chemical attack |
| C. High alumina cement | 3. Gives a higher rate of heat development during hydration of cement |
| D. Rapid hardening Portland cement | 4. Has a higher content of tricalcium silicate |

Codes:

| | | | | | | | | | |
|---|---|---|---|---|---|---|---|---|---|
| (a) | A | B | C | D | (b) | A | B | C | D |
| | 3 | 2 | 1 | 4 | | 4 | 1 | 2 | 3 |
| (c) | A | B | C | D | (d) | A | B | C | D |
| | 3 | 1 | 2 | 4 | | 4 | 2 | 1 | 3 |

21. If p is the standard consistency of cement, the amount of water used in conducting the initial setting time test on cement is
    (a) 0.65 p (b) 0.85 p (c) 0.6 p (d) 0.8 p
22. Increase in fineness of cement
    (a) reduces the rate of strength development and leads to higher shrinkage.
    (b) increases the rate of strength development and reduces the rate of deterioration.
    (c) decreases the rate of strength development and increases the rate of diterioration.
    (d) increases the rate of strength development and leads to higher shrinkage.
23. Consider the following statements:
    1. Tests on cement paste to determine initial and final setting times are done at normal consistency condition.
    2. Low heat cement has a high percentage of tri-calcium aluminate.
    3. High early strength Portland cement contains a large percentage of tricalcium silicate and lower percentage of dicalcium silicate.

    which of these statements are correct?
    (a) 1 and 2 (b) 1 and 3 (c) 2 and 3 (d) l, 2 and 3
24. Match List-I with List-II and select the correct answer using the codes given bellow the lists:

| List-I<br>(*Laboratory tests*) | List-II<br>(*Property*) |
|---|---|
| A. Vicat apparatus | 1. Soundness of cement |
| B. Le-Chatelier apparatus | 2. Initial setting time of cement |
| C. Slump test | 3. Workability of cement concrete |
| D. Fineness modulus | 4. Relative size of aggregates |

Codes:

| | A | B | C | D |
|---|---|---|---|---|
| (a) | 1 | 2 | 3 | 4 |
| (b) | 1 | 4 | 3 | 2 |
| (c) | 3 | 4 | 2 | 1 |
| (d) | 2 | 1 | 3 | 4 |

25. Match List-I (Property of cement) with List-II (Testing apparatus) and select the correct answer using the codes given below the lists:

| List-I<br>(*Property of Cement*) | List-II<br>(*Apparatus*) |
|---|---|
| A. Specific gravity | 1. Blain’s appratus |
| B. Setting time | 2. Le-Chatelier’s flask |
| C. Soundness | 3. Compressometer |
| D. Fineness | 4. Autoclave |
| | 5. Vicat’s apparatus |

Codes:

| | A | B | C | D |
|---|---|---|---|---|
| (a) | 3 | 5 | 1 | 2 |
| (b) | 2 | 5 | 1 | 4 |
| (c) | 2 | 5 | 4 | 1 |
| (d) | 5 | 3 | 4 | 1 |

26. Before testing setting time of cement one should test cement for
    (a) soundness (b) strength (c) fineness (d) consistency

27. Which one of the following statement regarding the cement fineness is NOT correct?
    (a) Fine cement is more liable to suffer from shrinkage craking than a coarse cement.
    (b) Fine cement will show faster rate of hardening than coarse cement.
    (c) Fine cement shows faster rate of heat evolution and total quantity of heat evolved is much larger than coarse cement.
    (d) Fine cement shows the same setting time as coarse cement.
28. For marine works, the best suited cement is
    (a) low heat Portland cement (b) rapid hardening cement
    (c) ordinary Portland cement (d) blast furnace slag cement
29. Match List-I with List-II and select the correct answer using the codes given below the lists:

| List-I<br>(*Apparatus*) | List-II<br>(*Property*) |
|---|---|
| A. Vicat's needless | 1. Setting time |
| B. Michaeli's compound lever | 2. Specific surface |
| C. Le-Chatelier's apparatus | 3. Tensile strength |
| D. Turbidimeter | 4. Soundness |

Codes:

| | A | B | C | D |
|---|---|---|---|---|
| (a) | 1 | 2 | 3 | 4 |
| (b) | 1 | 3 | 4 | 2 |
| (c) | 2 | 4 | 3 | 1 |
| (d) | 3 | 4 | 1 | 2 |

30. Match List-I with List-II and select the correct answer using the codes given below the lists:

| List-I<br>(*Type of cement*) | List-II<br>(*Uses*) |
|---|---|
| A. Rapid hardening | 1. Refractory concrete in industries |
| B. Quick setting | 2. Dams |
| C. High Alumina | 3. Concrete under water |
| D. Low heat | 4. Concrete for cold weather |
| | 5. Repair of bridges |

Codes:

| | A | B | C | D |
|---|---|---|---|---|
| (a) | 1 | 3 | 5 | 4 |
| (b) | 5 | 3 | 1 | 2 |
| (c) | 5 | 1 | 3 | 2 |
| (d) | 3 | 2 | 5 | 4 |

## Answer Table

| | | | | | |
|---|---|---|---|---|---|
| 1. (d) | 2. (a) | 3. (c) | 4. (c) | 5. (d) | 6. (b) |
| 7. (d) | 8. (b) | 9. (d) | 10. (a) | 11. (c) | 12. (c) |
| 13. (a) | 14. (b) | 15. (c) | 16. (c) | 17. (b) | 18. (b) |
| 19. (c) | 20. (d) | 21. (b) | 22. (d) | 23. (b) | 24. (d) |
| 25. (c) | 26. (d) | 27. (c) | 28. (d) | 29. (b) | 30. (b) |

# 6

# Materials for Making Concrete-II Aggregates

## 6.1 INTRODUCTION

Aggregates are the materials basically used as filler with binding material in the production of mortar and concrete. They are derived from igneous, sedimentary and metamorphic rocks or manufactured from blast furnace slag, etc. Aggregates form the body of the concrete, reduce the shrinkage and effect economy. They occupy 70-80 per cent of the volume and have considerable influence on the properties of the concrete. It is therefore significantly important to obtain right type and quality of aggregates at site. They should be clean, hard, strong, durable and graded in size to achieve utmost economy from the paste. Earlier aggregates were considered to be chemically inert but the latest research has revealed that some of them are chemically active and also that certain types exhibit chemical bond at the interface of aggregates and cement paste. To increase the bulk density of concrete aggregates are used in two markedly different sizes—the bigger ones known to be coarse aggregate (grit) and the smaller ones fine aggregate (sand). The coarse aggregate form the main matrix of concrete and the fine aggregate from the filler matrix between the coarse aggregate.

## 6.2 CLASSIFICATION OF AGGREGATES

### On the Basis of Geological Origin

The aggregates may be classified into natural aggregates and artificial aggregates.

***Natural Aggregates:*** These are obtained by crushing from quarries of igneous, sedimentary or metamorphic rocks. Gravels and sand reduced to their present size by the natural agencies also fall in this category. The most widely used aggregate are from igneous origin. Aggregates obtained from pits or dredged from river, creek or sea are most often not clean enough or well graded to suit the quality requirement. They therefore require sieving and washing before they can be used in concrete.

***Artificial Aggregates:*** Broken bricks, blast furnace slag and synthetic aggregates are artificial aggregates. Broken bricks known as *brick bats* are suitable for mass concreting, for example, in foundation bases. They are not used for reinforced concrete works. Blast furnance slag aggregate is obtained from slow cooling of the slag followed by crushing. The dense and strong particles as obtained are used for making precast concrete products. The sp. gr. of these range between 2–2.8 and bulk density 1120–1300 kg/$m^3$. The blast furnace slag aggregate has good fire resisting properties but are responsible for corrosion of reinforcement due to sulphure content of slag. Synthetic aggregates are produced by thermally processed materials such as expanded clay and shale used for making light weight concrete.

### On the Basis of Size

According to size aggregates are classified as coarse aggregate, fine aggregate and all-in- aggregate.

***Coarse Aggregate:*** Aggregate retained on 4.75 mm sieve are identified as coarse. They are obtained by natural disintegration or by artificial crushing of rocks. The maximum size of aggregate can be 80 mm. The size is governed by the thickness of section, spacing of reinforcement, clear cover, mixing, handling and placing methods. For economy the maximum size should be as large as possible but not more than one-fourth of the minimum thickness of the member. For reinforced sections the maximum size should be at least 5 mm less than the clear spacing between the reinforcement and also at least 5 mm less than the clear cover. Aggregate more than 20 mm size are seldom used for reinforced cement concrete structural members.

***All-in-aggregate:*** Naturally available aggregates of different fractions of fine and coarse sizes are known as all-in-aggregate. The deficiency of any particular fraction can be corrected for use in the mix but they are not recommended for quality concrete.

***Graded Aggregate:*** Aggregate most of which passes through a particular size of sieve are known as graded aggregate. For example, a graded aggregate of nominal size 20 mm means an aggregate most of which passes IS sieve 20 mm.

***Fine Aggregate:*** Aggregate passing through 4.75 mm sieve are defined as fine. They may be natural sand—deposited by rivers, crushed stone sand—obtained by crushing stones and crushed gravel sand. The smallest size of fine aggregate (sand) is 0.06 mm. Depending upon the particle size, fine aggregates are described as fine, medium and coarse sands. On the basis of particle size distribution, the fine aggregates are classed into four zones; the grading zones being progressively finer from grading zone I to grading zone IV (IS: 383).

### On the Basis of Shape

Aggregates are classified as rounded, irregular, angular, and flaky.

***Rounded Aggregates:*** These are generally obtained from river or sea shore and produce minimum voids (about 32 per cent) in the concrete. They have minimum ratio of surface area to the volume, and the cement paste required is minimum. Poor interlocking bond makes it unsuitable for high strength concrete and pavements.

***Irregular Aggregates:*** They have voids about 36 per cent and require more cement paste as compared to rounded aggregate. Because of irregularity in shape they develop good bond and are suitable for making ordinary concrete.

***Angular Aggregate:*** They have sharp, angular and rough particles having maximum voids (about 40 per cent). Angular aggregate provide very good bond than the earlier two, are most suitable for high strength concrete and pavements; the requirement of cement paste is relatively more.

***Flaky Aggregate:*** These are sometimes wrongly called as *elongated* aggregate. However, both of these influence the concrete properties adversely. The least lateral dimension of flaky aggregate (thickness) should be less than 0.6 times the mean dimension. For example, the mean sieve size for an aggregate piece passing through 50 mm and retained on 40 mm sieve is (50 + 40)/2 = 45.0 mm. If the least lateral dimension is less than 0.6 × 45 = 27.0 mm, the aggregate is classified as flaky. Elongated aggregate are those aggregate whose length is 1.8 times its mean dimension. Flaky aggregate generally orient in one plane with water and air voids underneath. They adversely affect durability and are restricted to maximum of 15 per cent.

*Notes:*
1. **Very sharp and rough aggregate particles or flaky and elongated particles require more fine material to produce a workable concrete. Accordingly, the water requirement and, therefore, the cement content increases. Excellent concrete is made by using crushed stone, but the particles should be roughly cubical in shape.**
2. **The flakiness and elongation tests are described in IS: 2386 (Part I).**

### Based on Unit Weight

Aggregates are classified as normal-weight, heavy-weight and light-weight aggregate depending on weight and specific gravity as given in Table 6.1

**Table 6.1 Classification of Aggregate Based on Unit Weight**

| *Aggregate* | *Sp. gr.* | *Unit weight ($kN/m^3$)* | *Bulk density ($kg/m^3$)* | *Examples* |
|---|---|---|---|---|
| Normal-weight | 2.5-2.7 | 23-26 | 1520-1680 | Sand, gravel, granite sandstone, limestone |
| Heavy-weight | 2.8-2.9 | 25-29 | $>2080$ | Magnetite ($Fe_3O_4$), Baryte ($Ba_3SO_4$), scrap iron |
| Light-weight | | 12 | $<1120$ | Dolomite, pumice, cinder, clay |

## 6.3 CHARACTERISTICS OF AGGREGATE

The properties to be considered while selecting aggregate for concrete are strength, particle shape, specific gravity, bulk density, voids, porosity, moisture content and bulking.

***Strength:*** The strength should be at least equal to that of the concrete. Rocks commonly used as aggregates have a compressive strength much higher than the usual range of concrete strength. A typical stress-strain curve for aggregate is shown in Fig. 6.1. The test conducted for strength evaluation are crushing test, impact-test and ten per cent fines test. Of these the first one is the most reliable. Generally the specifications prescribe 45 per cent for aggregate used for concrete other than wearing surface and 30 per cent for concrete for wearing surfaces, such as runways, roads etc. limit for the crushing value. The toughness of aggregate is measured by impact test. The impact value should not exceed 30 per cent for wearing surface and 45 per cent for remaining concretes. Hardness of aggregate is tested by abrasion test. The abrasion value is restricted to 30 per cent for wearing surfaces and 50 per cent for concrete for other purposes.

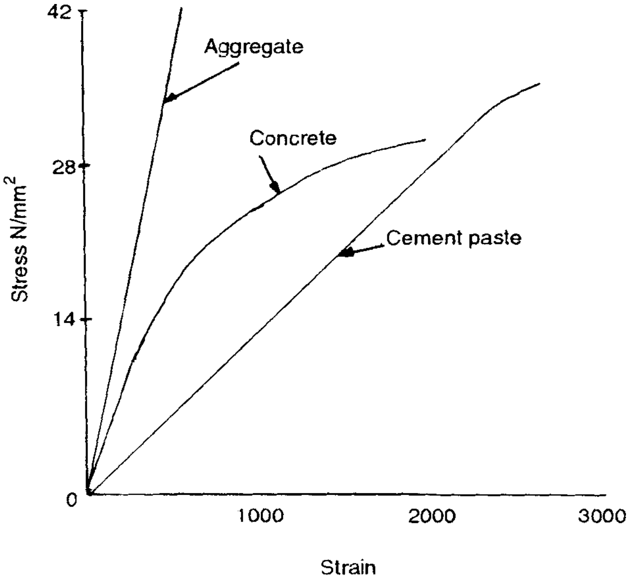

**Fig. 6.1 Stress Strain Curves for Aggregate**

***Stiffness:*** The modulus of elasticity of concrete is approximately equal to the weighted average of the moduli of the cement paste and the aggregate, as such the modulus of the coarse aggregate has an important influence on the stiffness of concrete. A high value reduces the dimensional changes due to creep and shrinkage of cement paste, but at the cost of higher internal stresses. In concrete that is to be subjected to wide variations of temperature and humidity, internal cracking is reduced by the use of a more compressible aggregate, but in practice this effect is rarely of sufficient importance to determine the choice of aggregate.

***Bond Strength:*** Due to difference between the coefficients of thermal expansion of paste and aggregate and to the shrinkage of cement paste during hardening, concrete is in a state of internal stress even if no external forces are present. It is reported that the stresses are likely to be greatest at the paste-aggregate interfaces where minute cracks exist, even in concrete that has never been loaded. Under increasing external load, these cracks spread along the interfaces before extending into the paste or aggregate particles. The strength of the bond between aggregate and cement paste thus has an important influence on the strength of concrete. There is no standard test for bond but it is known that the rougher the surface texture of the particles, the better the bond. The role of particle shape is less well understood; the greater specific surface of angular particles should enable greater adhesive force to be developed, but the angular shape probably causes more severe concentrations of internal stress.

***Shape and Texture:*** The shape influences the properties of fresh concrete more than when it has hardened. Rounded aggregate are highly workable but yield low strength concrete. Same is the case with irregular shaped aggregate. Flaky aggregate require more cement paste, produce maximum voids and are not desirable. Angular shape is the best. Crushed and uncrushed aggregates generally give essentially the same strength for the same cement content. The shape and surface texure of fine aggregate govern its void ratio and significantly affect the water requirement.

***Specific Gravity***: The specific gravity of most of the natural aggregates lies between 2.6-2.7. The specific gravity and porosity of aggregates greatly influence the strength and absorption of concrete. Specific gravity of aggregates generally is indicative of its quality. A low specific gravity may indicate high porosity and therefore poor durability and low strength. The concrete density will greatly depend on specific gravity.

***Bulk Density:*** The bulk density of aggregate depends upon their packing, the particles shape and size, the grading and the moisture content. For coarse aggregate a higher bulk density is an indication of fewer voids to be filled by sand and cement.

***Voids*** The void ratio is calculated as

$$\text{Void ratio} = 1 - \frac{\text{Bulk density}}{\text{Apparent specific gravity}}$$

If the voids in the concrete are more the strength will be low.

***Porosity:*** The entrapped air bubbles in the rocks during their formation lead to minute holes or cavities known as *pores*. The porosity of rocks is generally less than 20 per cent; the concrete becomes permeable and ultimately affects the bond between aggregate and cement paste, resistance to freezing and thawing of concrete and resistance to abrasion of aggregate. The porous aggregate absorb more moisture, resulting in loss of workability of concrete at a much faster rate.

***Moisture Content:*** The surface moisture expressed as a percentage of the weight of the saturated surface dry aggregate is known as moisture content. A high moisture content increases the effective water/cement ratio to an appreciable extent and may render the concrete weak.

***Bulking:*** The increase in the volume of a given mass of fine aggregate caused by the presence of water is known as bulking. The water forms a film over the fine aggregate particles, exerts force of surface tension and pushes them apart increasing the volume. The extent of bulking depends upon the percentage of moisture present in the sand and its fineness. With ordinary sand bulking varies from 15-30 percent. It increases with moisture content up to a certain point (4-6%), reaches maximum, the film of water on the sand surface breaks, and then it starts decreasing. Figure 6.2 shows the bulking of sand with moisture content. In preparing concrete mixes if sand is measured by volume and no allowance is made for bulking, the moist sand will occupy considerably larger volume than that prepared by the dry sand and consequently the mix will be richer. This will cause, less quantity of concrete per bag of cement. For example, if the bulking of sand is 10% and if mix ratio is 1:2:4, the actual volume of sand used will be 1.1 × 2 =2.2 instead of 2 per unit volume of cement. If this correction is not applied the actual dry sand in the concrete will be $\frac{1}{1.1} \times 2 = 1.82$, instead of 2 per unit volume of cement. The mix proportion then would be 1:1.82:4 rather than 1: 2: 4. Which indicates lesser production of concrete. Also, there will be chances of segregation, honeycombing and reduced yield of concrete.

Bulking of sand can be determined, in field, by filling a container of known volume (A) with damp sand in the manner in which the mixer hopper will be filled. The height of sand in the container is measured. The sand is then taken out of container carefully, ensuring no sand is lost during this transaction. The sand is then either dried and filled back into the gauge box, or the container is filled with water and the damp sand is poured in to displace the water. Whichever method is adopted, the new depth of aggregate in the container gives the unbulked volume (B).

Then percentage bulking expressed as a percentage of the dry volume = $\frac{A-B}{B} \times 100$

**Note:** The dry and fully saturated (flooded) sand occupy almost same volume

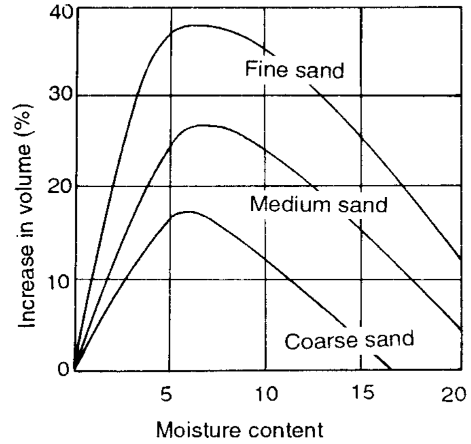

**Fig. 6.2 Effect of Moisture Content on Bulking of Sand**

***Fineness Modulus:*** It is a numerical index of fineness, giving some idea about the mean size of the particles in the aggregates. The fineness modulus (F.M.) varies between 2.0 and 3.5 for fine aggregate, between 5.5 and 8.0 for coarse aggregate, and from 3.5 to 6.5 for all-in aggregate. Aggregate, whose F.M. is required, is placed on a standard set of sieves (80, 63, 40, 20, 12.5, 10, 4.75, 2.36, 1.18 mm and 600, 300, 150 μm) and the set vibrated. The material retained on each sieve after sieving represent the fraction of aggregate coarser than the sieve in question but finer than the sieve above. The sum of the cumulative percentages retained on the sieves divided by 100 gives the F.M. A fineness modulus of 3.0 can be interpreted to mean that the third sieve i.e., 600 μm is the average size. The test procedure is given IS: 2386 (Part I).

The object of finding F.M. is to grade the given aggregate for the required strength and workability of concrete mix with minimum cement. Higher F.M. aggregate result in harsh concrete mixes and lower F.M. result in uneconomical concrete mixes.

## 6.4 DELETERIOUS MATERIALS AND ORGANIC IMPURITIES

Substances such as organic matters, clay, shale, coal, iron pyrites, etc. which are weak, soft, fine or may have harmful physical or chemical effects on the aggregates are considered to be deleterious. They affect the properties of concrete in green as well as in hardened state and are undesirable. They may be classified as those interfering with the process of hydration, i.e. organic matters, coatings such as clay, etc. affecting the development of bond between aggregate and the cement paste, and, unsound particles which are weak or bring about chemical reaction between aggregate and cement paste. The surface coated impurities in aggregate can be removed by adequate washing. However, chemically-bonded stable coating which cannot be so removed may increase shrinkage cracks. The salts present in the sea-shore sand should be washed out otherwise efflorescence is caused afterwards. Mica, if present in sand, reduces the strength of concrete. Iron pyrites and sulphides produce surface staining and pop-outs.

## 6.5 SOUNDNESS

Soundness is defined as the ability of aggregate to resist changes in volume as a result of changes in physical conditions. The conditions affecting this property are freezing and thawing, temperature changes, and alternate wetting and drying. Porous and weak aggregates containing undesirable extraneous matter undergo excessive volume changes under favourable conditions. The freeze-thaw resistance of aggregate is related to its porosity, absorption, and pore structure. This may cause local scaling to surface cracking consequently leading to impaired appearance and sometimes structural failure. Aggregates may also be chemically unstable. Some of the aggregate with certain chemical constituents react with alkalis in cement which may cause abnormal expansion and map cracking of concrete.

## 6.6 ALKALI-AGGREGATE REACTION

The aggregates were considered to be inert material till 1940. Considerable trouble has been experienced through extensive pop-outs and cracking in a fairly close pattern, of concrete work probably a year or more after the concrete has been cast. Although this trouble may take a year to become plainly visible the effects can often be observed in petrographic thin sections of the concrete within a few months. The phenomenon is accompanied by extensive expansion and may lead in bad cases to complete disruption and disintegration of the concrete and is known as alkali- aggregate reaction or sometimes *concrete cancer*. The trouble is due to reaction between silica in aggregate and alkalis in the cement. In some cases alkalis, mainly from the cement supplemented by alkalis in the aggregate, react with carbonates in the aggregate to produce similar result. The types of rocks which contain reactive constituents include traps, andesites, rhyolites, siliceous limestone and certain types of sandstones. The reactive components may be in the form of opals, cherts, chalcedony, volcanic glass (excepting basaltic glasses), zeolites, and tridmite.

### Mechanism

The precise causes and behaviour of the phenomenon are, however, still a little obscure. A reactive aggregate, if in finely ground state, will inhibit the action. The dividing line between aggregate which will cause trouble and that which will not, appears to be retained on and passing a 150 µm sieve. The precise explanation of this is not quite clear but the action is probably akin to that of lime, the presence of which if fine and thoroughly mixed with the cement has no harmful effect on the concrete, but if present in large lumps it subsequently slakes, if it becomes damp, with disruptive effect.

Reaction between cement and aggregate can be of two types: reaction between the alkalis of the cement and either silicas or carbonates in the aggregate. The former appears to be more common. The alkali-aggregate reaction takes place only in the presence of water or water vapour. The water forms strong caustic solute with alkalis of cement. This caustic liquid attacks reactive silica to form alkali-silica-gel of unlimited swelling type. When the conditions are congenial, progressive manifestation of concrete, particularly in thin concrete sections, results cracks and eventual failure of concrete structures. Conspicuous effect may not be notified in mass concrete sections. The formation of pattern cracks result in subsequent loss in strength and elasticity because of stresses induced by the growth of silica gel. Many destructive forces become operative on the concrete disrupted by alkali-aggregate reaction which further hasten the total disintegration of concrete.

The carbonate rocks which are reactive range from pure limestones to pure dolomites and those rocks which have excess of Mg or Ca ions over the ideal proportion are likely to give trouble. Apparently there are several different types of alkali-carbonate reactions not all of which are expansive and harmful. The reaction zones are up to 2 mm wide around the aggregate particles and are visible on polished surface in thin petrographic sections.

### Factors Affecting Alkali-aggregate Reaction

*Reactive Type of Aggregates:* Reactive material have been found to have serious effects if present in small quantities but not if it constitutes the whole of the aggregate.

*High Alkali Content Cement:* If the cement contains less than 0.4 per cent alkalis (computed as $Na_2O$) no expansion or disruptive effect is likely even with a quite highly reactive aggregate, but due to difficulties of manufacture it is not usual to specify an alkali content of less than 0.6 per cent.

*Availability of Moisture*: Progress of the alkali-aggregate reaction takes place only in the presence of water. That is why this destructive effect is not observed in the interior of mass concrete.

*Temperature Condition:* The favourable temperature for the reaction is 10-38°C.

### Control of Alkali-aggregate Reaction

*By Selecting Non-reactive Aggregate:* Aggregate can be identified by petrographic examination. The mortar bar test and the chemical test are used.

*By Using Low Alkali Cement:* Cements with alkali less than 0.6 per cent should be used.

*By Controlling Moisture:* Old concrete should not be allowed to come in contact with water. The best way is to apply mortar with water proofing agents on concrete surface.

*By Puzzolanas:* The aggregates are found to be reactive when they contain silica in a particular proportion and fineness. When fly-ash or surkhi or crushed stone dust is added this optimum condition of silica being in particular proportion and fineness is disturbed and the aggregates turn to be innocuous.

*By Air Entraining Agents:* The alkali-silica-gel imparts osmotic pressure over the set cement gel and this is mainly responsible for formation of cracks. When air entraining agents are added they absorb the osmotic pressure and control the expansion.

## 6.7 THERMAL PROPERTIES OF AGGREGATE

The thermal properties of coarse aggregate are specific heat, thermal conductivity and coefficient of expansion. The first two are detrimental in case of mass concrete. Also these properties are of concern in case of light weight concrete used for thermal insulation purposes. The third one affects the concrete in general since the coefficient of thermal expansion of concrete increases with that of coarse aggregate. Any appreciable difference in the coefficients of coarse aggregate and cement paste may break the bond between the two. Freezing and thawing effect may be prominent if the difference in the two is more than $5.4 \times 10^{-6}$ per °C.

## 6.8 FINE AGGREGATE

Sand (> 0.07 mm) is used as a fine aggregate in mortar and concrete. It is a granular form of silica. Sand used for mix design is known as standard sand (IS: 650). In India Ennore Sand is standard sand and in U.K. it is Leighton-Burrard Sand. The standard sand should be obtained from Ennore, Tamil Nadu. It should be quartz, light grey or whitish variety and should be free from silt. It should (100%) pass through 2-mm IS sieve and should be (100%) retained on 90-micron IS sieve with the following distribution,

| *Particle Size* | *Per cent* |
|---|---|
| Smaller than 2 mm and greater than 1 mm | 33.33 |
| Smaller than 1 mm and greater than 500 micron | 33.33 |
| Smaller than 500 micron but greater than 90 micron | 33.33 |

Sand used in mortars for construction purposes should posses at least 85 per cent of the strength of standard sand mortars of like proportions and consistency.

***Note:*** The standard sand should be free from organic impurities. The loss of mass on extraction with hot hydrochloric acid of rd 1.16 should not be more than 0.25%.

***Classification:*** Sand may be classified on the basis of source, mineralogical composition, size of the particles and particle size distribution. Depending upon the source sand may be classed as natural sand—resulting from natural disintegration of rocks or deposited by streams; crushed stone sand—produced by crushing hard stones and, crushed gravel sand—produced by crushing natural gravel. Based on mineralogical composition, sand is divided into quartz, felspar and carbonaceous varieties. Depending upon its size sand is classified as coarse sand—fineness modulus (F.M.) 2.90-3.20; medium sand—F.M.: 2.60-2.90 and; fine sand—F.M. : 2.20-2.60. Based on particle size distribution fine aggregate have been divided in four grades from grading zone I to grading zone IV as given in Table 6.2.

**Table 6.2 Gradings of Fine Aggregate (IS: 383)**

| *Sieve Designation* | *Percentage Passing for* | | | |
|---|---|---|---|---|
| | *Grading Zone I* | *Grading Zone II* | *Grading Zone III* | *Grading Zone IV* |
| 10 mm | 100 | 100 | 100 | 100 |
| 4.75 mm | 90-100 | 90-100 | 90-100 | 95-100 |
| 2.36 mm | 60-65 | 75-100 | 85-100 | 95-100 |
| 1.18 mm | 30-70 | 55-90 | 75-100 | 90-100 |
| 600 micron | 15-34 | 35-59 | 60-79 | 80-100 |
| 300 micron | 5-20 | 8-30 | 12-40 | 15-50 |
| 150 micron | 0-10 | 0-10 | 0-10 | 0-15 |

*Functions of Sand:* The functions of sand are to achieve economy by its use as adulterant in mortar, prevent shrinkage and development of cracks in mortar, furnish strength to mortar against crushing and allow carbon dioxide from the atmosphere to penetrate the fat lime mortars necessary for its air hardening.

*Effect of Gradation:* The grading of fine aggregate has a great influence on workability of mortar. Very fine sand and very coarse sand have been found to be unsatisfactory for making mortar and concrete. Very fine sand results in a poor mortar and is uneconomical, whereas very coarse sand produces a harsh mix affecting workability. When well graded (consisting of particles of different sizes) the voids are minimised.

*Effect of Impurities:* The impurities such as clay, dust and organic materials are harmful for mortar and concrete and in any case should not exceed 4 per cent. Of these clay is most harmful since it coats individual sand particles and prevents their bonding with cement consequently diminishing the strength of mortar which is further reduced by the enhanced water requirement of mortar. The clay and dust impurities can be removed by careful washing. Addition of finely ground clay to clean coarse sand may improve its grading and reduce voids. Hence, a lean mortar deficient in fines may be improved both in density and workability by addition of small percentages of such clays. The organic matters, shell and vegetables injure the hardening properties of the cement reducing the strength and durability.

*Effect by Entraining Air in Concrete:* The quantity of fine aggregate required for making concrete mix can be reduced by entraining air.

## 6.9 COARSE AGGREGATE

These may be uncrushed, crushed or partially crushed gravel or stone most of which is retained on 4.75 mm IS sieve. They should be hard, strong, dense, durable, clear and free from veins and adherent coatings; and free from injurious amounts of disintegrated pieces, alkali, organic matter and other deleterious substances. Flaky, scoriaceous and elongated aggregate should be avoided.

***Functions:*** The functions of coarse aggregate are almost same as that of fine aggregate.

## 6.10 CINDER AGGREGATES

They are well-burnt furnace residue obtained from furnaces using coal as fuel and are used for making lime concrete. They should be clean and free from clay, dirt, wood ash or other deleterious matter. They are classed as A, B and C. Class A is recommended for general purposes, class B for interior work not exposed to damp conditions, and class C for precast blocks.

Sulphate content should not exceed 1 per cent when expressed as sulphur trioxide and loss on ignition 10 per cent for class A, 20 per cent for class B, 25 per cent for class C.

Average grading is as under:

| *Sieve No.* | *Percentage passing* |
|---|---|
| 10 mm | 10 |
| 4.75 mm | 80 |
| 2.36 mm | 60 |
| 1.18 mm | 40 |
| 600 micron | 30 |
| 300 micron | 25 |
| 150 micron | 16 |

## 6.11 BROKEN BRICK COARSE AGGREGATE

They are prepared from well-burnt or over-burnt broken bricks free from under-burnt particles, soil and salt and are used in lime concrete.

Water absorption after 24 hours on immersion in water should not exceed 25 per cent and water soluble matter should not exceed 1 per cent. Aggregate impact value should not exceed 50 per cent.

Grading is as under:

| *Sieve No. (mm)* | *Percentage passing (by weight)* |
|---|---|
| 80 | 100 |
| 40 | 95-100 |
| 20 | 45-75 |
| 4.75 | |

## 6.12 TESTING OF AGGREGATES

The size, shape, grading of aggregate and their surface moisture affect directly the workability and strength of concrete whereas soundness, alkali-aggregate reaction and presence of deleterious substances adversely affect the soundness and durability of concrete. The following tests are conducted to ensure satisfactory performance of aggregate.

### Particle Size Distribution Test (IS: 2386 (Part 1))

Sample of fine aggregate, coarse aggregate or all-in-aggregate, as required to be tested, are taken in sufficient quantities. The minimum weight of sample for the test should be as follows.

| *Minimum size present in substantial proportions (mm)* | *Minimum weight of sample to be taken for sieving (kg)* |
|---|---|
| 63 | 50 |
| 50 | 35 |
| 40 or 31.5 | 15 |
| 25 | 5 |
| 20 or 16 | 2 |
| 12.5 | 1 |
| 10 | 0.5 |
| 6.3 | 0.2 |
| 4.75 | 0.2 |
| 2.36 | 0.1 |

The air dried sample is placed on a set of specific sieves with largest size on the top. The set of sieve is shaked for 2 minutes. Arrangement of sieve for different types of aggregate is as follows.

| *Fine aggregates* | *Coarse aggregate* | *All-in-aggregate* |
|---|---|---|
| 10 mm | 40 mm | 80 mm |
| 4.75 mm | 20 mm | 63 mm |
| 2.36 mm | 16 mm | 40 mm |
| 1.18 mm | 10 mm | 20 mm |
| 600 micron | 4.75 mm | 16 mm |
| 300 micron | 2.36 mm | 10 mm |
| 150 micron | | 4.75 mm |
| 75 micron | | 2.36 mm |
| | | 1.18 mm |
| | | 600 micron |
| | | 300 micron |
| | | 150 micron |
| | | 75 micron |

A cruve is plotted with sieve sizes on abscissa on a graph (Fig. 6.3) and percentage of aggregate passing as ordinate. From this graph relative amount of various sizes of aggregate can be readily compared.

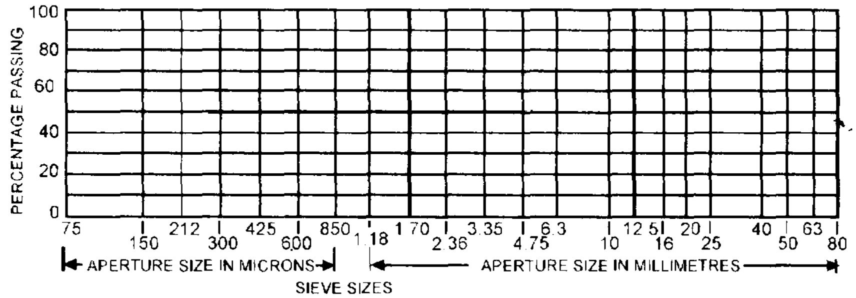

**Note:** The vertical scale of this chart is an arithmetic scale and the horizontal scale is logarithmic

Fig. 6.3 Chart for Recording Sieve Analysis Result

## Flakiness Index and Elongation Index Test (IS: 2386 (Part I))

Because of large number of flaky particles in the coarse aggregate more voids are formed in the concrete consequently more mortar is required to fill the voids, resulting in uneconomy. Also, durability of concrete will be affected.

For flakiness index (F.I) and elongation index (E.I) sufficient quantity of aggregate is taken so as to provide at least 200 pieces of any fraction to be tested. The sample is sieved through I.S. sieves as given in Table 6.3.

**Table 6.3 Dimensions of Thickness and Length Guages**

| *Size of aggregate* | | *Thickness gauge (mm)* | *Length gauge (mm)* |
|---|---|---|---|
| *Passing through IS sieve* | *Retained on IS sieve* | | |
| 63 mm | 50 mm | 33.90 | – |
| 50 mm | 40 mm | 27.00 | 81.0 |
| 40 mm | 25 mm | 19.50 | 58.5 |
| 31.5 mm | 25 mm | 16.95 | – |
| 25 mm | 20 mm | 13.50 | 40.5 |
| 20 mm | 16 mm | 10.80 | 32.4 |
| 16 mm | 12.5 mm | 8.55 | 25.6 |
| 12.5 mm | 10 mm | 6.75 | 20.2 |
| 10 mm | 6.3 mm | 4.89 | 14.7 |

*For* determining *F.I,* the aggregate retained on sieves are separated. Now, each aggregate piece is passed through the corresponding slot in the thickness gauge (Fig. 6.4). Flakiness index is given by,

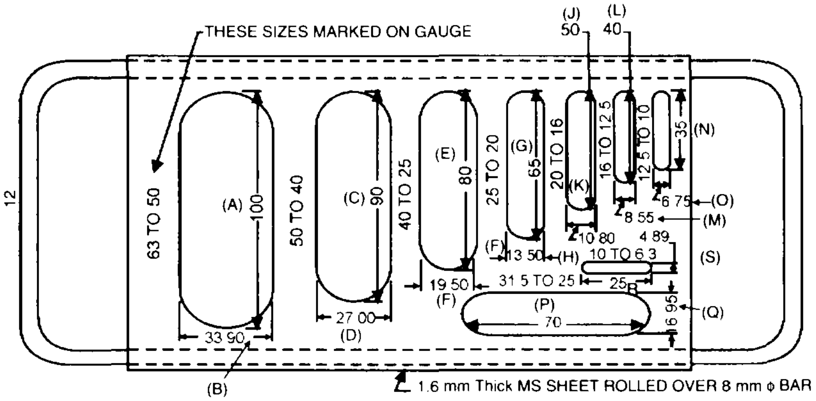

1.6 mm Thick MS SHEET ROLLED OVER 8 mm ϕ BAR

All dimensions in millimetres

**Fig. 6.4 Thickness Gauge**

$$\text{F.I} = \frac{\text{Weight of aggregate passing through the slot of the thickness gauge}}{\text{Total wieght of sample}} \times 100$$

*For determining F.I,* the aggregate are sieved through the corresponding sieves. Aggregate retained on each sieve are separated. Then each aggregate piece is passed through the corresponding slot of length gauge (Fig. 6.5)

$$\text{E.I} = \frac{\text{Weight of the aggregate retained on length gauge}}{\text{Total wieght of aggregate}} \times 100$$

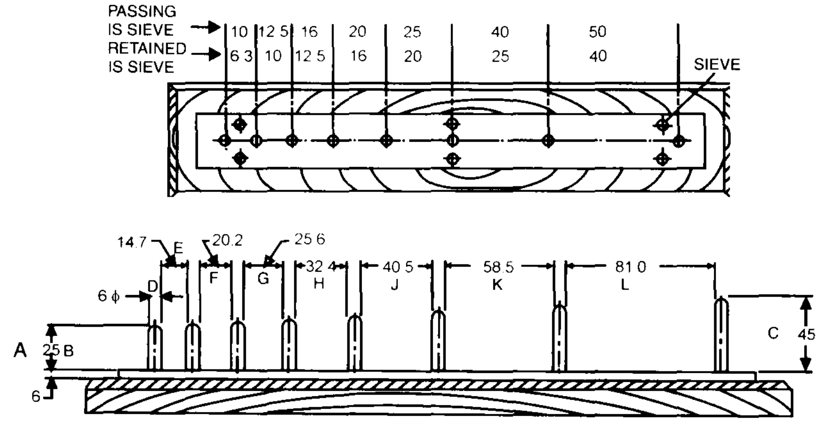

All dimensions in millimetres

**Fig. 6.5 Length Gauge**

## Deleterious Materials and Organic Impurities Test (IS: 2386 Part II)

### Determination of clay lumps

The sample of aggregate is dried to constant weight at a temperature not exceeding 110°C. Samples of fine aggregate and those of coarse aggregate are given in Table 6.4.

**Table 6.4 Size of Particles and of Sieves for the clay Lumps Test**

| *Size of particles making up the samples (mm)* | *Weight of sample (Min.) (g)* | *Size of sieve for sieving residue of clay lumps* |
|---|---|---|
| Fine aggregate (retained on 1.18 mm is sieve) | 100 | 850 Micron |
| Over 4.75 to 10 | 1000 | 2.36 mm |
| Over 10 to 20 | 2000 | 4.75 mm |
| Over 20 to 40 | 3000 | 4.75 mm |
| Over 40 | 5000 | 4.75 mm |

The sample is spread in a thin layer on the bottom of container and examined for clay lumps. The clay lumps, if any, are broken and removed by the use of sieves as given in Table 6.4.

The percentage of clay lumps,

$$L = \frac{W - R}{W} \times 100$$

where W is the weight of sample and R is the weight of sample after removal of clay lumps.

***Notes:***

1. **The samples selected from material should be handled carefully to avoid breaking up of clay lumps.**
2. **For mixtures of fine and coarse aggregates, the material is separated into two sizes on 4.75 mm IS sieve for preparing samples of fine and coarse aggregates.**
3. **The clay lumps should not exceed 1% for fine as well as coarse aggregates by weight (IS: 383).**

### Determination of clay, fine silt and fine dust

Sedimentation method is used to determine clay, fine silt and dust, including particles up to 20 micron. The amount of sample taken for test is given in Table 6.5.

**Table 6.5 Weights of Sample**

| *Max. size present in substantial Proportion (mm)* | *Approximate sample weight (g)* |
|---|---|
| 63 to 25 | 6000 |
| 20 to 12.5 | 1000 |
| 10 to 6.3 | 500 |
| 4.75 or smaller | 300 |

For testing fine aggregate for clay, fine silt and dust weight approximately 300g of the air dried sample, passing the 4.75 mm IS sieve, and place it in the screw-topped glass jar, together with 300 ml of diluted sodium oxalate solution. The jar is then rotated about its long axis (with this axis horizontal) at a speed of 80 rpm for 15 minutes. The suspension is then poured into 1000 ml measuring cylinder and the residue washed by gentle swirling and decantation of successive 150 ml portions of sodium oxalate solution, the washings being added to the cylinder until the volume is made up to 1000 ml.

For coarse aggregate the sample is placed in a suitable container, covered with a measured volume of sodium oxalate solution (0.8 g/l), agitated vigorously and the liquid suspension transferred to the 1000 ml measuring cylinder. The process is repeated until all clayey material is transferred to the cylinder. The volume is made upto 1000 ml with sodium oxalate solution.

The percentage of fine clay, silt and dust, A, is determined by the folliwng fomula

$$A = \frac{100}{W_1}\left(\frac{1000\ W_2}{V} - 0.8\right)$$

Where $W_1$ = weight of original sample (g)
$W_2$ = weight of dried sample (g)
$V$ = volume of the pepette (ml)
0.8 = weight of sodium oxalate (g) in one litre of the dilute solution.

***Note:*** **These impurities should not exceed 3% for fine and coarse aggregates except for crushed fine aggregate for which the limit is 15% (IS:383).**

### Determination of Light-weight pieces (coal and lignite)

The percentage of light-weight pieces are determined by means of sink-float separation in a heavy liquid of suitable specific gravity. The approximate volumes of materials to be combined to produce a mixture of the desired specific gravity may be computed from the following sp. gr. of the different liquids used to form the heavy liquid of sp. gr. 2± 0.01.

| *Liquid* | *sp. gr.* |
|---|---|
| 1, 1, 2, 2 - Tetra bromoethane | 2.97 |
| Benzene | 0.88 |
| Bromoform | 2.88 |
| Carbon tetra chloride | 1.58 |
| Monobromobenzene | 1.49 |

The minimum size of test sample should be as follows.

| *Max. size of aggregate (mm)* | *Min. weight of sample (g)* |
|---|---|
| 6.3 (fine aggregate) | 200 |
| 20 | 3000 |
| 40 | 5000 |
| 80 | 10000 |

For fine aggregate, the dried sample is cooled to room temperature and then sieved over a 300 micron IS sieve until less than 1% of the retained material passes the sieve in one minute of continuous sieving. Weigh the material coarser than 300 micron IS sieve and introduce it into heavy liquid in a suitable container, the volume of liquid being at least three times the absolute volume of the aggregate. The liquid is poured into another container, passing it through the skimmer in a way that only floating pieces are poured off with the liquid. The liquid collected in the second container is returned to the first container, agitate the sample by stirring and repeat the process until the sample is free of floating pieces. The decanted pieces are washed in carbon tetrachloride, until the heavy liquid is removed and then these are dried in an oven at 105°C. The decanted pieces are brushed and weighed. The percentage of light weight pieces, L is given by

$$L = \frac{W_1}{W_2} \times 100$$

In case of coarse aggregate, the dried sample is cooled to room temperature and sieved over a 4.75 mm IS sieve. The material coarser than 4.75 mm IS sieve is weighted. It is then introduced into the heavy liquid in a suitable container, the volume of liquid being at least three times the absolute volume of the aggregate. The pieces that rise to the surface are removed by skimmer and sieved. The remaining pieces are agitated repeatedly and floating pieces are removed until no additional pieces rise to the surface. The decanted pieces are washed with carbon tetrachloride until all of the heavy liquid is removed and are allowed to dry. The percentage of light weight pieces, L is given by

$$L = \frac{W_1}{W_3} \times 100$$

Where $W_1$ = dry weight (g), of decanted pieces
$W_2$ = dry weight (g), of portion of sample coarser than 300-micron IS sieve
$W_3$ = dry weight (g), of portion of sample coarser than 4. 75-mm IS sieve

These impurities should not exceed 1% for fine and coarse aggregates (IS: 383)

### Determination of soft particles in coarse aggregate

The sample size for the test should be as follows.

| *Sieve size (mm) (square opening sieves)* | *sample weight (g)* |
|---|---|
| over 10 to 12.5 | 200 |
| over 12.5 to 20 | 600 |
| over 20 to 25 | 1500 |
| over 25 to 40 | 4500 |
| over 40 to 50 | 12, 000 |

***Note:*** **If the sample contains less than 10 per cent of any of the sizes as above, the size should not be tested but, for the purpose of calculating the test results, it should be considered to contain the same percentage of the soft particles as the average of next smaller and the next larger size. If one of these sizes is absent, it should be considered to have the same percentage of soft particles as the next larger or next smaller size, whichever is present. Each particle of the aggregate under test is scratched with a brass rod (1.6 mm diameter) with a pressure of 1 kg. Particles are considered to be soft if a groove is made without deposition of metal from the brass rod or if separate particles are detached from the roke mass.**

Weighed average percentage of soft particles calculated from percentage of test sample classified as soft by weight and by number of particles should be reported.

### Estimation of organic impurities in sand

Sand is tested, for organic impurities, as delivered and without drying. A 350-ml graduated glass bottle is filled to the 75-ml mark with 3 per cent solution of sodium hydroxide in water. The sand is added gradually until the volume measured by the sand layer is 125 ml. The volume is made up to 200 ml by adding more solution. The bottle is stoppered and shaken vigorously and then allowed to stand for 24 hours.

If the colour of the liquid above the sand is darker than the standard solution, prepared a fresh, the following test should be made.

2.5 ml of 2 per cent solution of tannic acid in 10 per cent alcohol is added to 97.5 ml of a 3 per cent sodium hydroxide solution. It is placed in a 350 ml bottle and is shaken vigorously and allowed to stand for 24 hours. The colour of this is compared with the solution above the sand.

### Specific Gravity and Water Absorption Test (IS: 2386 (Part III))

***Aggregate Larger than 10 mm:*** A sample of 2000 g of aggregate is used for conducting the test. Aggregate which have been artificially heated should not normally be used.

The sample is thoroughly washed to remove finer particles and dust, drained and then placed in the wire basket and immersed in distilled water at a temperature between 22-32°C with a cover of at least 50 mm of water above the top of the basket.

Immediately after immersion the interrupted air is removed from the sample by lifting the basket containing it 25 mm above the base of the tank and allowing it to drop 25 times at the rate of about one drop per second. The basket and aggregate are kept completely immersed during the operation and for a period of 24 ± 1/2 hours afterwards. The basket and the sample are jolted and weighed in water (weight $A_1$). These are then removed from the water and allowed to drain for a few minutes, after which the aggregate are gently emptied from the basket on to one of the dry clothes, and the empty basket is returned to the water, jolted 25 times and weighed in water (weight $A_2$).

The aggregate placed on the dry cloth are gently surface dried with the cloth, and are completely surface dried. The aggregate are then weighed (weight B).

The aggregate are thereafter placed in an oven at a temperature of 100-110°C and maintained at this temperature for 24 ± 1/2 hours. It is then removed from the oven, cooled in the air-tight container and weighed (weight C). The computations are as under

$$\text{Specific gravity} = \frac{C}{B - A}$$

$$\text{Apparent specific gravity} = \frac{C}{C - A}$$

$$\text{Water absorption (per cent of dry weight)} = \frac{(B - A)}{C} \times 100$$

where $A$ = the weight in g of the saturated aggregate in water $(A_1 - A_2)$

B = the weight in g of the saturated surface dry aggregate in air

C = the weight in g of oven-dried aggregate in air

***Aggregate Between 40 mm and 10 mm:*** A sample of about 1000 g of the aggregate is screened on a 10 mm sieve, thoroughly washed to remove fine particles of dust, and immersed in distilled water in a glass vessel at a temperature of 22 to 32°C for 24 ± 1/2 hours. Soon after immersion and again at the end of the soaking period, air entrapped in or bubbles on the surface of the aggregate should be removed by gentle agitation.

The vessel is over filled by adding distilled water, dried on the outside and weighed (weight A).

The vessel is then emptied and the aggregate allowed to drain and later refilled with distilled water. It is dried on the outside and weighed (weight B).

The aggregate is placed on a dry cloth and gently surface dried with the cloth. The aggregate is weighed (weight C) after the surface is completely dried.

The aggregate are then placed in oven at a temperature of 100 to 110°C for 24 ± 1/2 hours and thereafter cooled in air tight container and weighed (weight D)

$$\text{Specific gravity} = \frac{D}{C-(A-B)}$$

$$\text{Apparent specific gravity} =$$

$$\text{Water absorption (per cent of dry weight)} = \frac{(C-D)}{D} \times 100$$

Where A = weight in g of vessel containing sample and filled with distilled water
B = weight in g of vessel filled with distilled water only
C = weight in g of saturated surface-dry sample
D = weight in g of oven-dry sample

***Aggregate Smaller than 10 mm:*** A Pycnometer shown in Fig. 6.6 is used for determining specific gravity. A sample about 1000 g for 10 mm to 4.75 mm or 500 g if finer than 4.75 mm, is placed in the tray and covered with distilled water at a temperature of 22-32°C. Soon after immersion, air entrapped in or bubbles on the surface of the aggregate are removed by gentle agitation with a rod. The sample is kept immersed for 24 ± 1/2 hours.

The water is then carefully drained from the sample through a filter paper, any material retained being returned to the sample. The aggregate including any solid matter retained on the filter paper should be exposed to a gentle current of warm air to evaporate surface moisture and stirred at frequent intervals to insure uniform drying until no free surface moisture can be seen and the material just attains a *free-running* condition. The saturated and surface-dry sample is weighted ( weight A).

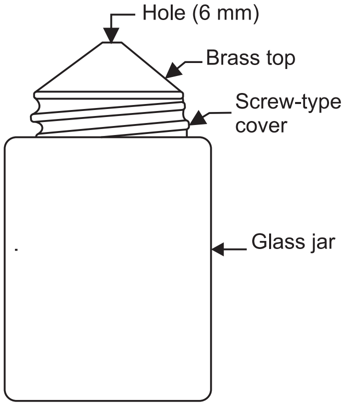

**Fig. 6.6 Pycnometer**

The aggregate is then placed in the pycnometer which is filled with distilled water. The pycnometer is dried on the outside and weighed (weight B).

The contents of the pycnometer are emptied into the tray. The pycnometer is refilled with distilled water to same level as before, dried on the outside and weighed (weight C).

The water is then carefully drained from the sample by decantation through a filter paper and any material retained is returned to the sample. The sample is placed in the oven at a temperature of 100 to 110°C for 24 ± 1/2 hours, during which period it should be stirred occasionally to facilitate drying. It is then cooled in the air-tight container and weighed (weight D).

$$\text{Specific gravity} = \frac{D}{A-(B-C)}$$

$$\text{Apparent specific gravity} = \frac{D}{D-(B-C)}$$

$$\text{Water absorption (per cent of dry weight)} = \frac{A-D}{D} \times 100$$

Where A = weight in g of saturated surface-dry sample
B = weight in g of pycnometer or gas jar containing sample and filled with distilled water
C = weight in g of pycnometer or gas jar filled with distilled water only
D = weight in g of oven-dried sample

### Determination of Bulk Density and Voids (IS: 2386 (Part III))

The bulk density, measured in kilograms per litre is affected by several factors, including the amount of moisture present and the amount of effort introduced in filling the measure. This is laboratory test intended for comparing properties of different aggregates. It is not generally suitable for use as a basis for quoting mix design conversion factors.

The test is carried out on dry material when determining the voids, but when bulking tests are required material with a given percentage of moisture may be used.

The measure is filled with thoroughly mixed aggregate to about one-third and tamped with 25 strokes of the rounded end of the tamping rod. A further similar quantity of aggregate is added with a further tamping of 25 times and the surplus aggregate is struck off, using the tamping rod as a straight edge. The net weight of the aggregate in the measure is determined and the bulk density is calculated.

The measure is then filled to overflowing by means of a shovel or scoop, the aggregate being discharged from a height not exceeding 50 mm above the top of the measure. The surface of the aggregate is then levelled with a straight edge. The net weight of the aggregate in the measure is determined and the bulk density is calculated.

The percentage of voids are calculated as follows:

$$\text{Percentage of voids} = \frac{G_s - \gamma}{G_s} \times 100$$

where $G_S$ = specific gravity of the aggregate
$\gamma$ = bulk density in kg/litre

### Necessary adjustment for bulking of fine aggregate (Field method)

***I Method:*** Sufficient quantity of the sand is put loosely into a container until it is about two-third full. The sand is levelled off and a steel rule is pushed vertically down through the sand at the middle to the bottom and the height is measured (say h mm).

The sand is transferred into another container. The first container is half filled with water and about half the sand is put back and rammed with a steel rod (about 6 mm in diameter) so that its volume is reduced to a minimum. Then the remainder of the sand is added and rammed in the same way. The depth is measured at the middle with the steel rule (say h′ mm).

The percentage of bulking of the sand due to moisture is calculated from the formula:

$$\text{Percentage bulking} = \left(\frac{h}{h'} - 1\right) \times 100$$

***II Method:*** The damp sand (consolidated by shaking) is poured in a 250 ml measuring cylinder up to the 200 ml mark. Then the cylinder is filled with water and the sand is stirred well. The sand surface will be found to be below its original level. Supposing the surface is at the mark y ml, the percentage of bulking of the sand due to moisture is calculated as:

$$\text{Percentage bulking} = \left(\frac{200}{y} - 1\right) \times 100$$

### Determination of Surface Moisture in Fine Aggregate (Field Method)

*Determination by Weight:* The container is filled up to the mark with water and the weight in grams determined. It is emptied. Enough water is placed in the container to cover the sample, after which the sample of fine aggregate is introduced into the container and the entrained air removed. The container is then filled to the original mark and the weight in grams determined. The amount of water displaced by the sample is calculated as:

$$V_s = M_c + M_s - M$$

where $V_s$ = weight in g of water displaced by the sample
$M_c$ = weight in g of container filled up to the mark with water
$M_s$ = weight in g of the sample
$M$ = weight in g of the sample and container filled to the mark with water

*Determination by Volume:* A volume of water sufficient to cover the sample is measured in milliliters and placed in the container. The weighed sample of fine aggregate is then admitted into the container and the contained air removed. The combined volume of the sample and the water is determined by direct reading when a graduated flask is used. Where a pycnometer or volumetric flask of known volume is used, the combined volume of the sample and the water is determined by filling up to the mark with a measured volume of water and subtracting this volume from that of the container. The amount of water displaced by the sample is calculated as:

$$V_s = V_2 - V_1$$

Where $V_s$ = volume in ml of water displaced by the sample
$V_2$ = combined volume in ml of the sample and water
$V_1$ = volume in ml of water required to cover the sample

The percentage of surface moisture in terms of the saturated surface-dry fine aggregate and in terms of the weight of wet fine aggregate are calculated as:

$$P_1 = \frac{V_s - V_d}{M_s - V_d} \times 100$$

$$P_2 = \frac{V_s - V_d}{M_s - V_d} \times 100$$

where $P_1$ = percentage surface moisture in terms of saturated surface-dry fine aggregate
$V_s$ = weight in g of water displaced

$V_d$ = the weight of the sample divided by the specific gravity on saturated and surface-dry basis determined as prescribed
$M_s$ = weight in g of the sample
$P_2$ = percentage surface moisture in terms of the weight of wet fine aggregate

***Note:*** **The surface moisture in the fine aggregate should be reported to the nearest one per cent, and also that whether it is by weight or by volume.**

## Bulking Test for Fine Aggregate (IS: 2386 (Part III))

Fine aggregate (sand) has a tendency to increase in volume (bulk) depending upon the moisture present in it. In making concrete mix, if the batching in done by volume, the actual quantity of sand in each batch will be less than the recommended volume and actual quantity of sand in each batch will be less than the recommended volume and consequently the mix will be rich in cement, i.e. the proportions of cement and sand will be different to be provided. This will result in uneconomy and may affect adversely teh concrete also. Therefore, the amount of sand will have to be increased by percentage bulking (B).

The field method of determination of bulking is explained in Sec. 6.3. In the laboratory test sufficient quantity of oven dried sand is filled in graduated cylinder up to a certain fixed mark. The sand is emptied in a container and the weigh of dry sand is determined 1% water is added in the sand mixed thoroughly and filled in the graduated cylinder. The volume of sand will be found to increase. The process is repeated by increasing the percentage of water in steps of 1% each time till a decrease in the volume of sand is observed. Still this addition of water is continued till the volume of sand comes back to the original volume (fully saturated).

A graph is plotted between moisture content and percentage increase in volume. The graph will be of the shape as shown in Fig. 6.2. The percentage bulking is given by,

$$B = \frac{\text{bulked volume} - \text{dry volume}}{\text{dry volume}} \times 100$$

## Crushing Value Test (IS: 2386 (Part IV))

The material for the test should consist of aggregate passing 12.5 mm sieve and retained on 10 mm sieve. For other sizes, the materials are separated on the appropriate sieves given in Table 6.6.

**Table 6.6 Details of Aggregate Crushing Test for Non-standard Sizes of Aggregate**

| *Nominal sizes* | | *Diameter of cylinder to be used (cm)* | *Size of sieve for separating fines* |
|---|---|---|---|
| *Passing through (mm)* | *Retained on (mm)* | | |
| 25.00 | 20.00 | 15.0 | 4.75 mm |
| 20.00 | 12.50 | 15.0 | 3.35 mm |
| 10.00 | 6.30 | 15.0 or 7.5 | 1.70 mm |
| 6.3 | 4.75 | 15.0 or 7.5 | 1.18 mm |
| 4.75 | 3.35 | 15.0 or 7.5 | 850 micron |
| 3.35 | 2.36 | 15.0 or 7.5 | 600 micron |

*Note:* About 6500 g of natural aggregate is required to provide samples for the 150 mm cylinder, or about 1000 g for the 75 mm cylinder.

The aggregate is tested in a surface-dry condition. The weight of material comprising the test sample is determined (weight A).

The cylinder of the test apparatus is positioned on the base-plate and the test sample is added in thirds, each being subjected to 25 strokes from the tamping rod. The surface of the aggregate is carefully levelled and the plunger is inserted so that it rests horizontally on this surface.

The apparatus, with the test sample and plunger in position is then placed between the platens of the testing machine and loaded at an uniform rate as possible, so that the total load is reached in 10 minutes. The total load should be 400 kN.

The load is released and the whole of the material is removed from the cylinder and sieved on a 2.36 mm sieve for the standard test, or on the appropriate sieve given in Table 6.5. The fraction passing the sieve is weighed.

The ratio of the weight of fines formed to the total sample weight in each test is expressed as a percentage, recorded to the first decimal place:

$$\text{Aggregate crushing value} = \frac{B}{A} \times 100$$

Where B = weight of fraction passing the appropriate sieve
A = weight of surface-dry sample

## Ten Per Cent Fines Test (IS.2386 (Part IV))

The *ten per cent fines* value gives a measure of the resistance of an aggregate to crushing, that is, applicable to all aggregates.

The material for the test consists of surface-dry aggregate passing a 12.5 mm sieve and retained on a 10 mm sieve. The weight of material comprising the test sample is determined (weight A).

The cylinder of the test apparatus is put in position on the base-plate and the test sample is added in thirds, each being subjected to 25 strokes from the tamping rod. The surface of the aggregate is carefully levelled and the plunger inserted so that it rests horizontally on this surface, care being taken to ensure that the plunger does not jam in the cylinder.

The apparatus with the test sample and plunger in position is then placed in the compression testing machine. The load is applied at a uniform rate so as to cause a total penetration of the plunger in 10 minutes of about:

15.0 mm for rounded or partially rounded aggregate (for example, uncrushed gravels),
20.0 mm for normal crushed aggregate, and
24.0 mm for honeycombed aggregate (for example, expanded shales and slags).

These figures may be varied according to the extent of the rounding or honeycombing.

After reaching the required maximum penetration, the load is released and the whole of the material removed from the cylinder is sieved on a 2.36 mm sieve. The fines passing the sieve are weighed, and expressed as a percentage of the weight of the test sample. Normally, this percentage will fall within the range 7.5 to 12.5, but if it does not, a further test is made at a load adjusted as seems appropriate to bring the percentage fines within the range of 7.5 to 12.5.

The mean percentage fines from the two tests at this load are used in the following formula to calculate the load required to give 10 per cent fines:

$$\text{Load required for 10 per cent fines} = \frac{14x}{y+4}$$

Where $x$ = load in tonnes

$y$ = mean percentage fines from two tests at $x$ tonnes load.

## Aggregate Impact Value Test (IS:2386 (Part IV))

The *aggregate impact value* gives a relative measure of the resistance of an aggregate to sudden shock or impact, which in some aggregate differs from its resistance to a slow compressive load.

The test sample consists of aggregate the whole of which passes a 12.5 mm sieve and is retained on a 10 mm sieve. The aggregate comprising the test sample is dried in an oven for a period of four hours at a temperature of 100-110°C and cooled.

The measure is filled about one-third full with the aggregate and tamped with 25 strokes of the rounded end of the tamping rod. A further similar quantity of aggregate is added and a further tamping of 25 strokes is given. The measure is finally filled to overflowing, tamped 25 times and the surplus aggregate is struck off, using the tamping rod as a straight-edge. The net weight of aggregate in the measure is determined to the nearest gram (weight A).

A cup, 102 mm internal diameter and 50 mm deep, is fixed firmly in position on the base of the machine and the whole of the sample is placed in it and compacted by a single tamping of 25 strokes of the tamping rod.

The hammer is raised until its lower face is 380 mm above the upper surface of the aggregate in the cup, and allowed to fall freely on to the aggregate. The test sample is subjected to a total of 15 such blows each being delivered at an interval of not less than one second.

The crushed aggregate is then removed from the cup and the whole of it is sieved on 2.36 mm IS sieve until no further significant amount passes in one minute. The fraction passing the sieve is weighed to an accuracy of 0.1 g (weight B). The fraction retained on the sieve is also weighed (weight C) and, if the total weight (B + C) is less than the initial weight (A) by more than one gram, the result is discarded and a fresh test made. Two tests are made.

The ratio of the weight of fines formed to the total sample weight in each test are expressed as a percentage, recorded to the first decimal place:

$$\text{Aggregate impact value} = \frac{B}{A} \times 100$$

Where $B$ = weight of fraction passing 2.36 mm sieve

$A$ = weight of oven-dried sample

## Aggregate Abrasion Value Test (IS: 2386 (Part IV))

The abrasion value of coarse aggregate may be determined by either Deval Machine or by Los Angeles machine.

### *Using Deval Machine*

*Abrasive Charge:* The abrasive charge consists of 6 cast iron or steel spheres approximately 48 mm in diameter, each weighing between 390 and 445 g. An abrasive charge of 6 spheres weighing 2500 ± 10 g is used with each test sample.

The test sample consists of dry coarse aggregate made up of percentages of the various sizes conforming to one of the gradings shown in Table 6.7. The grading used should be that most nearly representing the coarse aggregate furnished for the work.

**Table 6.7 Grading of Aggregate for Abrasion Test**

| *Grading* | *Passing sieve* | *Retaining sieve* | *Percentage of sample* |
|---|---|---|---|
| A | 20 mm | 12.5 mm | 25 |
| | 25 mm | 20 mm | 25 |
| | 40 mm | 25 mm | 25 |
| | 50 mm | 40 mm | 25 |
| B | 20 mm | 12.5 mm | 25 |
| | 25 mm | 20 mm | 25 |
| | 40 mm | 25 mm | 50 |
| C | 20 mm | 12.5 mm | 50 |
| | 25 mm | 20 mm | 50 |
| D | 12.5 mm | 4.75 mm | 50 |
| | 20 mm | 12.5 mm | 50 |
| E | 10 mm | 4.75 mm | 50 |
| | 12.5 mm | 10 mm | 50 |

The ***weight*** of the test sample depends upon its average specific gravity as given below.

| *Range of specific Gravity* | *Weight of Sample (g)* |
|---|---|
| Over 2.80 | 5500 |
| 2.4 to 2.80 | 5000 |
| 2.2 to 2.39 | 4500 |
| < 2.20 | 4000 |

***Procedure:*** The test sample and the abrasive charge are placed in the Deval abrasion testing machine and the machine is rotated for 10000 revolutions at a speed of 30 to 33 rev / min. At the completion of the test, the material is removed from machine and sieved on a 1.70 mm sieve. The material retained on the sieve is washed, dried and accurately weighed to the nearest gram.

The loss by abrasion is considered as the difference between the original weight of the sample and the weight of the material retained on the 1.70 mm sieve, expressed as percentage of the original weight of the test sample.

In case of crushed gravel, the percentage by weight of crushed fragments is determined, and the permissible percentage or wear is calculated as:

$$W = \frac{AL + (100 - A)L'}{100}$$

Where $W$ = permissible percentage of wear
$A$ = percentage of uncrushed fragments
$L$ = maximum percentage of wear permitted by the specifications for gravel consisting entirely of uncrushed fragments
$100 - A$ = percentage of crushed fragments
$L'$ = maximum percentage of wear permitted by the specifications for gravel consisting entirely of crushed fragments

### *Using Los Angeles Machine*

*Abrasive Charge:* The abrasive charge consists of cast iron spheres or steel spheres approximately 48 mm in diameter and each weighing between 390 and 445 g.

The abrasive charge, depending upon the grading of the test sample should be as given in Table 6.8.

**Table 6.8 Abrasive Charge for Los Angeles Test**

| *Grading* | *Number of sphere* | *Weight of charge (g)* |
|---|---|---|
| A | 12 | 5000 ± 25 |
| B | 11 | 4584 ± 25 |
| C | 8 | 3330 ± 20 |
| D | 6 | 2500 ± 15 |
| E | 12 | 5000 ± 25 |
| F | 12 | 5000 ± 25 |
| G | 12 | 5000 ± 25 |

The test sample consists of clean aggregate dried in an oven at 105 -110°C to substantially constant weight.

*Note:* It is recognized that different specification limits may be required for gradings E, F and G than for A, B, C and D. It is urged that investigations be conducted to determine the relationship, if any, which exists between results for these coarse gradings using the 10000 g samples and the finer ones using the 5000 g samples.

The test sample and the abrasive charge is placed in the Los Angeles abrasion testing machine and the machine is rotated at a speed of 20 to 33 rev / min. For gradings A, B, C and D, the machine is rotated for 500 revolutions; for gradings E, F and G, it is rotated for 1000 revolutions. The machine is so driven and so counter-balanced as to maintain a substantially uniform peripheral speed. If an angle is used as the shelf, the machine is rotated in such a direction that the charge is caught on the outside surface of the angle. At the completion of the test, the material is discharged from the machine and a preliminary separation of the sample made on a sieve coarser than the 1.70 mm. The finer portion is then sieved on a 1.70 mm sieve. The material coarser than the 1.70 mm sieve is washed, dried in an oven at 105 -110°C to a substantially constant weight, and accurately weighed to the nearest gram. The difference between the original and the final weights of the test sample expressed as a percentage of the original weight of the test sample gives the percentage of wear.

## Soundness Test (IS: 2386 Part V)

The sample of fine aggregate for the test is passed through 10-mm IS sieve and should be of such size that it yields not less than 100 g of each of the sizes as below.

| *Passing IS sieve* | *Retained on IS sieve* |
|---|---|
| 600 micron | 300 micron |
| 1.18 mm | 600 micron |
| 2.36 mm | 1.18 mm |
| 4.75 mm | 2.36 mm |
| 10 mm | 4.75 mm |

From the sample of coarse aggregate, sizes finer than 4.75 mm are removed and the size of sample for different sizes should be as follows.

| *Size (mm)* *(square hole sieve)* | *Yield (g)* |
|---|---|
| 10 to 4.75 | *300* |
| 20 to 10 | 1000 |
| 12.5 to 10 (33%) | |
| 20 to 12.5 (67 %) | |
| 40 to 20 | |
| 25 to 20 (33%) | 1500 |
| 40 to 25 (67%) | |
| 63 to 40 | |
| 50 to 40 (50%) | 3000 |
| 63 to 50 (50%) | |
| 80 or more | 3000 |

*Note:* All-in-aggregate should be separated in two major fractions, finer than 4.75 mm and coarser than 4.75 mm, and tested.

In case of fine aggregate, these are thoroughly washed on a 300 micron IS sieve and dried to constant weight at 105 to 110°C and separated into different sizes by the set of sieves listed earlier to yield at least 100g each. The coarse aggregate sample are washed thoroughly and dried to constant weight at 105 to 110°C and separated into different sizes. Particles coarser than the 20 mm IS sieve are counted.

The aggregate sample is immersed for 16 to 18 hours in the prepared solution of either sodium sulphate or magnesium sulphate solution. The sample is maintained at 27 ± 1°C. The aggregate sample is then removed from the solution and drained for 15 ± 5 minutes, placed in drying oven at 105-110°C and dried to constant weight. The sample is allowed to cool to room temperature. The process of immersion and drying is repeated for as many number of cycles as agreed to between the purchaser and vendor. The sample is then examined for quantitative and qualitative examination.

*Quantitative examination*: After the completion of final cycle the cooled sample is washed free from the sodium sulphate or magnesium sulphate with barium chloride. Each sample is dried to constant weight at 105 - 110°C and weighed. Fine aggregate are sieved over the same sieve on which it was retained before the test, and coarse aggregate over the following sieves.

| *Size of aggregate (mm)* | *Sieve used to determine loss (mm)* |
|---|---|
| 10 to 4.75 | 4 |
| 20 to 10 | 8 |
| 40 to 20 | 16 |
| 63 to 40 | 31.5 |

*Qualitative examination:* Frations of samples coarser than 20 mm are examined qualitatively for each immersion as well as at the completion of the test. The effects observed may be classed as disintegration, splitting, crumbling, cracking, flaking, etc.

## EXERCISES

1. (a) What are different types of aggregates for making mortar and concrete?
   (b) What are the sources of fine aggregate? Give the characteristics and uses of sand.
   (c) What is bulking of sand? How does it affect concrete mix?
2. (a) What is fineness? How would you find the Fineness modulus value of coarse and fine aggregates?
   (b) What are the specifications of good sand for general use in buildings? From which source is sand preferred and why?
3. (a) What are the different sources of sand ? which one of them is the best?
   (b) State the disadvantages of sea sand.
   (c) What is meant by aggregate? Briefly describe their classification.
4. (a) Discuss the characteristics of good aggregates.
   (b) What are the deleterious substances in aggregates? What are their harmful effects?
5. What is alkali-aggregate reaction? What are the factors which affect this reaction? How can this reaction be controlled?
6. Briefly describe the following tests:
   (a) Specific gravity test (b) Crushing test
   (c) Impact test (d) Ten per cent fines test
7. (a) What is the purpose of adding sand to cement mortar?
   (b) What is meant by all-in aggregate?
   (c) Write the general specifications for sand to be used in reinforced cement concrete works.
8. Briefly describe the following tests:
   (a) Deleterious materials (b) Organic impurities
   (c) Soundness (d) Fineness modulus
9. How do you determine fineness modulus of sand? What is its significance?
10. Write short notes on:
    (a) Effect of moisture on aggregates
    (b) Properties of good coarse aggregate
    (c) Fineness modulus
    (d) Alkali-aggregate reaction.

## OBJECTIVE TYPE QUESTIONS

1. Which of the following aggregates gives maximum strength in concrete?
   (a) Rounded aggregate (b) Elongated aggregate
   (c) Flaky aggregate (d) Cubical aggregate
2. The maximum bulking of sand is likely to occur at a moisture content of
   (a) 5% (b) 8% (c) 11% (d) 14%
3. Match List-I (Property) with List-II (Characteristic) and select the correct answer using the codes given below the lists:

| List-I<br>*(Property)* | List-II<br>*(Characteristic)* |
|---|---|
| A. Specific heat of an aggregate | 1. Breaks the bond between the aggregate and the paste |

| | |
|---|---|
| B. Thermal conductivity of aggregate | 2. Is a measure of its heat capacity |
| C. Thermal expansion | 3. Is affected by difference in thermal expansion of two different material |
| D. Durability of concrete | 4. Is a measure of its ability to conduct heat |

Codes:

| | | | | | | | | | |
|---|---|---|---|---|---|---|---|---|---|
| (a) | A | B | C | D | (b) | A | B | C | D |
| | 1 | 3 | 2 | 4 | | 2 | 4 | 1 | 3 |
| (c) | A | B | C | D | (d) | A | B | C | D |
| | 1 | 4 | 2 | 3 | | 2 | 3 | 1 | 4 |

4. The aggregate crushing value of coarse aggregates, which is used for making concrete, which in turn is used for purposes other than wearing surfaces should not exceed
   (a) 30% (b) 40% (c) 45% (d) 50%
5. Which of the following coarse aggregate require minimum cement paste?
   (a) Rounded (b) Irregular (c) Angular (d) Flaky
6. For high strength concrete the best aggregate is
   (a) rounded (b) irregular (c) angular (d) all-in-aggregate
7. Aggregate affecting durability of concrete most are
   (a) rounded (b) all-in-aggregate
   (c) flaky (d) irregular
8. The best reflection of strength of coarse aggregate is given by
   (a) crushing (b) impact
   (c) 10 per cent fines (d) hardness
9. Which of the following pairs is not matched correctly with regards to coarse aggregate? > 10 mm?
   (a) Strength 10 per cent fine
   (b) Toughness Impact test
   (c) Hardness Abrasion set
   (d) Sp. gr. Pyconometer

## Answer Table

1. (d) 2. (a) 3. (b) 4. (c) 5. (a) 6. (c) 7. (c) 8. (a) 9. (d)

# 7

# Materials for Making Concrete-III Water

- Introduction
- Quality of Mixing Water
- Effect of Mixing Water from Different Sources
- Water for Washing Aggregates
- Curing Water
- Exercises
- Objective Type Questions

## 7.1 INTRODUCTION

The purpose of using water with cement is to cause hydration of the cement. Water in excess of that required for hydration acts as a lubricant between coarse and fine aggregates and produces a workable and economical concrete. As discussed later in Chapters 10, 11 and 12, there is a definite optimum water requirement for a particular concrete and mortar. In case of excess water, the cement along with water comes to the surface by capillary action and forms a thin layer over surface known as laitance. This weakens bond between the successive lifts of concrete. The excess water may leak through the form work, resulting in honeycombed concrete and on evaporation makes the concrete porous. On the other hand lesser water makes it difficult to work with concrete and because of nonuniform mixing the resultant concrete is weaker in strength. The amount of water must therefore be limited to produce concrete of the quality required for a job. Water is also used for washing aggregates and curing.

## 7.2 QUALITY OF MIXING WATER

Almost any natural potable water that has no pronounced taste or odour is acceptable for the concrete mix. Many sources of water unsuitable for drinking may also be used. In case of a doubt, water samples should be tested for suitability. Excessive impurities may affect setting time, strength, durability and may cause efflorescence, surface discolouration, and corrosion of steel.

The effects of impurities in water are mainly expressed in terms of setting time of Portland cement. The initial setting time of the mixes with impure water and that with the pure water are obtained. Their difference in the initial setting time of ± 30 minutes with initial setting time not less than 30 minutes is supposed to be acceptable. The 7 day and 28 day compressive strengths of the cube/cylinder specimens prepared with impure water should not differ by 10 per cent from that of cubes/cylinders prepared with pure water. The tolerable concentrations of some of the impurities in water are given in Table 7.1.

**Table 7.1 Tolerance Concentration of Impurities in Mixing Water**

| *S.No.* | *Impurity* | *Tolerable concentration* |
|---|---|---|
| 1. | Silt and suspended particles | 2,000 ppm |
| 2. i) | Carbonates and bicarbonates of Na or K | 1,000 ppm |
| ii) | Bicarbonates of Mg | 400 ppm |
| 3. | Chlorides | 10,000 ppm |
| 4. | Sulphates | 20,000 ppm |
| 5. | Sulphuric anhydride | 3,000 ppm |
| 6. | Calcium chloride | 2 per cent by weight of cement |
| 7. | Sodium sulphide | $<$ 100 ppm |
| 8. | Sodium hydroxide | 0.5 per cent by weight of cement provided quick set is not induced |
| 9. | Dissolved salts | 15,000 ppm |
| 10. | Organic matter | 3,000 ppm |
| 11. | pH | 6-8 |
| 12. | Iron salts | 40,000 ppm |
| 13. | Acids (HCl, $H_2SO_4$) | 10,000 ppm |
| 14. | Sugar | 500 ppm |

*Suspended Particles:* Water containing less than 2000 ppm (parts per million) of dissolved solids can generally be used satisfactorily for making concrete. A higher concentration affects certain cements adversely.

*Inorganic Salts:* The presence of salts of zinc, manganese, tin, copper and lead considerably reduce the concrete strength. Sodium phosphate, sodium borate and sodium iodate act as retarders and cause a marked reduction in the strength of concrete. Sodium sulphide is detrimental to concrete and even a sulphide content of 100 ppm needs testing. Zinc chloride retards the set of concrete and the 3-day strength test cannot be performed. The presence of calcium chloride accelerates setting and hardening of cement. Carbonates of sodium and potassium cause a rapid setting and may reduce the concrete strength. Bicarbonates may accelerate or retard the setting of cement.

*Acids and Alkalis:* Water containing acids or alkalis (industrial waste water) is supposed to be unsuitable for making concrete. Water with pH value between 6-8 should only be used. The limit of acidity is guided by the requirement that the amount of 0.1 N NaOH required to neutralise 100 ml sample of water using phenophthalein as indicator should not be more than 1 ml. This acidity is equivalent to 49 ppm of $H_2SO_4$ or 36 ppm of HCI. The limit of alkalinity is guided by the requirement that the amount of 0.1 N HCI required to neutralize 100 ml of sample should be less than 5 ml. This alkalinity is equivalent to 265 and 420 ppm of carbonates and bicarbonates, respectively.

*Sugar:* Sugar up to 0.05 per cent by weight of water is harmless. Sugar up to 0.15 per cent by weight of cement retard the setting time, reduce the early strength and increase the 28 day strength. When used up to 0.2 per cent by weight of cement rapid setting with reduced 28 day strength is resulted.

*Oil Contamination:* Various kinds of oil are occasionally present in the mixing water. Mineral oil (petroleum), not mixed with animal or vegetable oils, probably has less effect on development of strength than other oils. However, mineral oil in concentrations greater than 2 per cent by weight of cement may reduce the concrete strength by more than 20 per cent. The vegetable oils have detrimental effect on concrete strength particularly at later ages.

*Algae:* Algae, present in mixing water or on the surface of aggregate either reduces bond by combining with the cement or reduces strength by entraining a large amount of air in the concrete.

## 7.3 EFFECT OF MIXING WATER FROM DIFFERENT SOURCES

### Ground Water

Natural ground waters seldom contain more than 20 to 30 ppm of iron. However, acid mine waters may carry rather large quantities of iron. Iron salts in concentrations up to 40,000 ppm do not usually affect mortar strengths adversely.

### Sea Water

Sea water may be used if suitable fresh water is not available. The sea water generally contains 3.5 per cent of salts with about 75 per cent of sodium chloride, about 15 per cent of chloride and sulphate of magnesium. It has been found to reduce the strength of concrete by 10-20 per cent and slightly accelerate the setting time. Sea water may lead to corrosion of the reinforcement. It has been found that the factors affecting corrosion are permeability of concrete and lack of proper cover. If these are ensured and adequate amount of entrained air is there, the problem of corrosion may be circumvented, or otherwise the reinforcement is likely to be corroded whether it is pure water or sea water but with a difference in the rate of corrosion. Therefore, sea water may be recommended for concrete without reinforcement. The chlorides in sea water may cause efflorescence restricting it to be used in making mortars for plastering. The use of sea water is not recommended for prestressed concrete because of stress corrosion and the small diameter wires (if corroded may cause disaster).

### Industrial Waste Water

Most waters carrying industrial waste have less than 3,000 ppm of total solids. When such water is used as mixing water in concrete, the reduction in compressive strength is generally less than about 10 per cent. Waste waters from paint factories, coke plants, chemical and galvanizing plants may contain harmful impurities. It is advisable to test any waste water that contains even few hundred parts per million of unusual solids before using it for mixing concrete.

One way of using sewage containing large organic matters (say 400 ppm) is to dilute it in a good disposal system to reduce the concentration to about 20 ppm or less, an amount too low to have any significant effect on concrete strength.

## 7.4 WATER FOR WASHING AGGREGATES

When aggregates are washed with water containing impurities, they get coated with layers of silt, salts and organic matters. These reduce the bond between the aggregates and cement and markedly affect the strength.

## 7.5 CURING WATER

Water fit for making concrete can be used for curing. Waters containing impurities and leading to stains is objectionable. When concrete is subjected to prolonged wetting, even a very low concentration of iron and organic matter may cause staining. Water containing more than 0.08 ppm of iron is not recommended for curing.

## EXERCISES

1. What is the purpose of mixing water in concrete?
2. Enumerate the various impurities in water having deleterious effects on concrete.
3. How will you decide on satisfactory water for making concrete?
4. If water of unknown performance is to be used, explain how to determine its acceptability.
5. What are the effects of impurities, in the mixing water, may have on concrete?
6. Sea water can be used in concrete. Comment.
7. After what process would sewage water be usable?
8. What effect would the following impurities have if present in mixing water?
   (a) Algae (b) Oils (c) Suspended solids
9. Discuss the requirements of water for
   (a) Making concrete (b) Washing aggregates
   (c) Curing concrete.

## OBJECTIVE TYPE QUESTIONS

1. The effects of impurities in water are expressed in terms of
   (a) initial setting time (b) final setting time
   (c) compressive strength (d) soundness
   of Portland cement.
2. The difference in 7 days compressive strength of cubes and cylinders prepared with impure and pure waters should not differ by more than
   (a) 2% (b) 5% (c) 10% (d) 12%
3. The upper limit of suspended particles in water for the preparation of concrete is
   (a) 200 ppm (b) 2000 ppm
   (c) 5000 ppm (d) 10,000 ppm
4. Organic matter in water for making concrete should not be more than
   (a) 1000 ppm (b) 3000 ppm
   (c) 10000 ppm (d) 15,000 ppm
5. Consider the following statement in making concrete with sea water.
   1. Strength of concrete is reduced by about 10-20%
   2. Setting time accelerates

3. Corrosion of reinforcement is not a problem if concrete is of good quality

Of the above statements

(a) 1 and 2 are correct
(b) 1 and 3 are correct
(c) only 1 is correct
(d) 1, 2, 3 are correct

6. Consider the following statements:

The effect of sea water on hardened concrete is to

1. increase its strength
2. reduce its strength
3. retard setting
4. decrease its durability

Of these statements

(a) 1 and 3 are correct
(b) 2 and 3 are correct
(c) 2 and 4 are correct
(d) 1 and 4 are correct

## Answer Table

1. (a) 2. (c) 3. (b) 4. (d) 5. (d) 6. (c)

# 8

# Materials for Making Concrete-IV Lime

## 8.1 INTRODUCTION

Until the invention of Portland cement, lime was used as the chief cementing material in the building construction both for mortar and plasters. Most of the ancient palaces, forts, temples, monuments, etc., have been built with lime. Though Portland cement has almost replaced lime, but still at places, where lime is available locally and during the period of shortage of ordinary Portland cement lime provides a cheap and alternative to cement. Usually, lime in free state is not found in nature.

The raw material for the manufacture of lime (CaO) is calcium carbonate which is obtained by the calcination of lime stone. The varieties of limestone commonly used in the construction industry are tufa, limestone boulders and kankars. Lime can also be obtained by the calcination of shell, coral, chalk and other calcareous substances. Coral and shells are sea animals. White chalk is a pure limestone whereas kankar is an impure limestone. Coral lime is claimed to be the purest source of lime.

Lime is obtained by burning limestone at a temperature of about 800°C.

$$\underset{\text{Limestone}}{CaCO_3} + 42.52\ \text{kcal} \xrightarrow[\text{Calcination}]{\text{Heating}} \underset{\text{Quick lime}}{CaO} + CO_2$$

### *Varieties of Lime*

*Pure limestone* is called calcite and that containing magnesite is called dolomitic limestone. The mineral containing calcium carbonate and magnesium carbonate in equimolecular quantities is called dolomite.

*Stone Lime* is almost pure lime obtained by calcination of limestone and is used for making lime-sand mortar for superstructures; lime-surkhi mortar for substructures and: lime terracing and flooring. Stone lime has hydraulic properties.

*Kankar Lime* is an impure lime obtained by calcination of kankars dug out from underground sources. These occur in the form of nodules and compact blocks. It is suitable for making lime-sand mortars for substructures. It is commonly used for making hydraulic lime.

*Shell Lime* is very pure lime obtained by calcination of shells of sea animals and corals. It is used for lime punning, white wash and colour wash, soil stabilization and glass production.

*Magnesian lime* is manufactured from dolomite and contain magnesia more than 5 per cent. It is used for making mortar and plaster.

### *Definitions*

*Quick Lime (CaO)* Pure lime, generally called quick lime, is a white oxide of calcium. Much of commercial quick lime, however, contains more or less magnesium oxide, which gives the product a brownish or grayish tinge. Quick lime is the lime obtained after the calcination of limestone. It is also called *caustic lime*. It is capable of slaking with water and has no affinity for carbonic acid. The specific gravity of pure lime is about 3.40.

*Fat Lime* has high calcium oxide component and, sets and hardens by the absorption of $CO_2$ from atmosphere. These are manufactured by burning marble, white chalk, calcareous tufa, pure lime stone, sea shell and coral.

*Hydraulic Lime* contains small quantities of silica, alumina, iron oxide in chemical combination with calcium oxide component. These are produced from carboniferous limestones and magnesian limestone. It has the property to set and harden under water.

*Hydrated Lime* When quick lime is finely crushed, slaked with a minimum amount of water, and screened or ground to form a fine homogeneous powder the product is called hydrated lime.

*Lump Lime* is the quick-lime coming out of the kilns.

*Milk Lime* is a thin pourable solution of slaked lime in water.

### *Characteristics of Lime*

1. Lime possesses good plasticity and is easy to work with.
2. It stiffens easily and is resistant to moisture.
3. The excellent cementitious properties make it most suitable for masonry work.
4. The shrinkage on drying is small because of its high water retentivity.

***Uses:*** In construction slaked lime is mainly used to make mortar for laying masonry and plastering. When so used quick lime should be completely hydrated by slaking from 3 to 14 days, depending upon the kind of lime, temperature, and slaking conditions. Hydrated lime, although immediately usable, is usually improved by soaking overnight or longer. Hydrated lime is often added to Portland cement mortar in proportions varying from 5 to 85 per cent of the weight of the cement to increase plasticity and workability. Most of the historical buildings had been plastered in lime. Lime punning—about 3 mm thick shell lime layer to improve the plastered surfaces and to give a shining appearance—is used very commonly now a days in the new structures. Some of the other uses of lime are manufacture of lime bricks, artificial stones, paints, glass; as stabilizer for soils and as a flux in metallurgical processes.

## 8.2 IMPURITIES IN LIMESTONES

***Magnesium Carbonate:*** Limestones contain magnesium carbonate in varying proportions. Presence of this constituent allows the lime to slake and set slowly, but imparts high strength. Further, the production of heat and expansion are low. The magnesium limestones are hard, heavy and compact in texture. In burning limestone, the magnesium carbonate is converted to magnesium oxide at a much lower temperature whereas calcium carbonate is oxidised at a little higher temperature. By the time calcium carbonate is oxidised most of the magnesium oxide formed is over burnt. Magnesium limestones display irregular properties of calcination, slaking and hardening. Up to 5 per cent of magnesium oxide imparts excellent hydraulic properties to the lime.

***Clay:*** It is mainly responsible for the hydraulic properties of lime. It also makes lime insoluble in water. The percentage of clay to produce hydraulicity in lime stones usually varies from 10 to 30. If, it is in excess, it arrests slaking whereas, if in small quantities the slaking is retarted. Thus, limes containing 3-5 per cent of clay do not display any hydraulic property and do not set and harden under water. Whereas, when clay is present as 20-30 per cent of lime, the latter exhibits excellent hydraulic properties and is most suitable for aqueous foundations.

***Silica:*** In its free form (sand) has a detrimental effect on the properties of lime. Limes containing high percentage of free silica exhibit poor cementing and hydraulic properties. Limes containing 15-20 per cent of free silica are known as poor limes.

***Iron Compounds:*** Iron occurs in small proportions as oxides, carbonates and sulphides. They are converted into $Fe_2O_3$ at lower temperatures of calcination. At higher temperatures iron combines with lime and silicates and forms complex silicate compounds. Pyrite or iron sulphide is regarded to be highly undesirable. For hydraulic limes 2-5 per cent of iron oxide is necessary.

***Carbonaceous Matters:*** Carbonaceous matters in lime are seldom present. Its presence is an indication of the poor quality of lime.

***Sulphates:*** Sulphates, if present, slow down the slaking action and increase the setting rate of limes.

***Alkalis:*** When pure lime is required the alkalis are undesirable. However, up to 5 per cent of alkalis in hydraulic limes do not have any ill effect but improve hydraulicity.

## 8.3 CLASSIFICATION

According to the percentage of calcium oxide and clayey impurities in it, lime can be classified as lean, hydraulic and pure lime. Since magnesium oxide slakes slowly, an increase in its percentage decreases rate of hydration and so is with clayey impurities as well.

***Lean or Poor Lime:*** It consists of CaO + MgO 80 to 85% with MgO less than 5% and clayey impurities of about more than 7 per cent in the form of silica, alumina and iron oxide. It sets on absorbing $CO_2$ from atmosphere.

*Characteristics*

1. Slaking requires more time and so it hydrates slowly. Its expansion is less than that of fat lime.
2. It makes thin paste with water.
3. Setting and hardening is very slow.
4. The colour varies from yellow to grey.

*Uses:* It gives poor and inferior mortar and is recommended for less important structure.

***Hydraulic Lime:*** It is a product obtained by moderate burning (900°-1100°C) of raw limestone which contains small proportions of clay (silica and alumina) 5-30 per cent and iron oxide in chemical combination with the calcium oxide content (CaO + MgO 70-80% with MgO less than 5%). In slaking considerable care is required to provide just sufficient water and no excess, since an excess would cause the lime to harden. Depending on the percentage of clay present these are classified further as, feebly, moderately and eminently hydraulic limes. It sets under water.

*Feebly Hydraulic Lime* has less than 5-10 per cent of silica and alumina and slakes slowly, after few minutes (5 to 15). The setting time is twenty one days. It is used in damp places and for less important structures.

*Moderately Hydraulic Lime* has 10-20 per cent of impurities, slakes sluggishly after 1-2 hours. The setting time is seven days. It is used in damp places.

*Eminently Hydraulic Lime* has clayey impurities 20-30 per cent and slakes with difficulty. Its initial setting time is 2 hours and final setting time is 48 hours. It is used in damp places and for all structural purposes.

***Pure, Rich or Fat Lime:*** It is soft lime (CaO + MgO more than 85% with MgO less than 4%) obtained by the calcination of nearly pure limestone, marble, white chalk, oolitic limestone and calcareous tufa. Also known as white washing lime should not have impurities of clay and stones, more than 5 per cent. Fat lime is nearly pure calcium oxide and when it is hydrated with the required amount of water the solid lumps fall to a soft fine powder of $Ca(OH)_2$ and the high heat of hydration produces a cloud of steam. It sets on absorbing $CO_2$, from atmosphere.

*Characteristics*

1. Slaking is vigorous and the volume becomes 2-3 times.
2. It sets slowly in contact with air, and hence is not suitable for thick walls or in wet climate.

3. If kept under water a fat lime paste does not lose its high plasticity and consequently does not set and hard.
4. sp. gr. of pure lime is about 3.4.

*Uses:* Fat lime finds extensive use in making mortar, matrix for concrete, base for distemper and in white wash, manufacturing of cement, and metallurgical industry.

## Classification (IS: 712)

Bureau of Indian standards has classified lime into class A, B, C, D, E and F based on the purpose of its use in construction.

***Class A—Eminently Hydraulic Lime*** is used for making mortar and concrete for construction and foundation works, i.e. for structural purposes.

*Characteristics*

(i) The colour is grey.
(ii) Calcium oxide and clay are 60-70 and 25 per cent respectively.
(iii) Slakes with difficulty.
(iv) Sets and hardens readily under water with initial setting time 2 hours and final setting time 48 hours.

***Class B—Semi Hydraulic Lime*** is used for masonry mortars, flooring and for concrete in ordinary constructions and plaster undercoat.

*Characteristics*

(i) The colour is grey.
(ii) Contains 70 per cent calcium oxide and 15 per cent clay.
(iii) Slakes and sets at slow rate taking about a week to set under water.

***Class C—Fat Lime*** is used for finishing coat in plastering, white washing and with puzzolana in mortars.

*Characteristics*

(i) The colour is white.
(ii) Slakes vigorously and increases to three times its original volume.
(iii) Contains about 93 per cent calcium oxide and about 5-7 per cent clay.

***Class D—Magnesium/Dolomitic Lime*** is used for finishing coat in plastering and white washing.

*Characteristics*

(i) The colour is white.
(ii) Contains about 85 per cent calcium and magnesium oxides.
(iii) Slakes promptly.
(iv) Sets slowly.

***Class E—Kankar Lime*** is used for making masonry mortars, plastering and white washing.

*Characteristics*

(i) The colour is grey
(ii) Contains 20 per cent calcium oxide, 5 per cent magnesium oxide and remaining impurities.
(iii) Slakes and sets slowly.

***Class F—Siliceous Dolomitic Lime*** used for undercoat and finishing coat of plaster.

The chemical composition and properties of these limes are given in Tables 8.1 and 8.2, respectively.

**Table 8.1 Chemical Requirements**

| *Sl. No.* | *Characteristics* | *Class* | | | | | | | | | |
|---|---|---|---|---|---|---|---|---|---|---|---|
| | | *A* | *B* | | *C* | | *D* | | *E* | *F* | |
| | | *Hydrated* | *Quick* | *Hyd* | *Quick* | *Hyd* | *Quick* | *Hyd* | *Hydrated* | *Quick* | *Hyd* |
| (i) | Calcium magnesium oxides, percent, *Min* (on ignited basis) | 60 | 70 | 70 | 85 | 85 | 85 | 85 | 50 | 70 | 70 |
| (ii) | Magnesium oxides, percent (on ignited basis), *Max* | *6* | 6 | 6 | 6 | 6 | — | — | 6 | — | — |
| | *Min* | | — | — | — | — | 6 | 6 | — | 6 | 6 |
| (iii) | Silica, alumina and ferric oxide, percent, *Min* (on ignited basis) | 20 | 10 | 10 | — | — | — | — | 20 | 10 | 10 |
| (iv) | Unhydrated magnesium oxide, percent, *Max* (on ignited basis) | — | — | — | — | — | 8 | 8 | — | 8 | 8 |
| (v) | Insoluble residue in dilute acid and alkali, percent, *Max* (on ignited basis) | 15 | 10 | 10 | 2 | 2 | 2 | 2 | 25 | 10 | 10 |
| (vi) | Carbondioxide, percent, *Max* (on oven dry basis) | 5 | 5 | 5 | 5 | 5 | 5 | 5 | 5 | 5 | 5 |
| (vii) | Free moisture content, percent, *Max* | 2 | — | 2 | — | 2 | — | 2 | 2 | — | 2 |
| (viii) | Available lime as CaO. percent, minimum | — | — | — | 75 (on dry basis) | 75 (on ignited basis) | — | — | — | — | — |

### Tables 8.2 Physical Requirements

| *SL. No.* | *Characteristics* | *Class* | | | | | | | | | |
|---|---|---|---|---|---|---|---|---|---|---|---|
| | | *A* | *B* | | *C* | | *D* | | *E* | *F* | |
| | | *Hydrated* | *Quick* | *Hyd* | *Quick* | *Hyd* | *Quick* | *Hyd* | *Hydrated* | *Quick* | *Hyd* |
| (i) | Fineness: | | | | | | | | | | |
| | a) Residue on 2.36 mm IS Sleve, percent, *Max* | Nil | — | Nil | — | Nil | — | Nil | Nil | — | Nil |
| | b) Residue on 300 micron IS Sleve, percent, *Max* | 5 | — | 5 | — | Nil | — | Nil | 5 | — | 5 |
| | c) Residue on 212 micron IS Sleve, percent, *Max* | — | — | — | — | 10 | — | 10 | — | — | Nil |
| (ii) | Residue on slaking: | | | | | | | | | | |
| | a) Residue on 850 micron IS Sleve, percent, *Max* | — | 10 | — | 5 | — | 5 | — | — | 10 | — |
| | b) Residue on 300 micron IS Sleve, percent, *Max* | — | — | — | 5 | — | 5 | — | — | — | — |
| (iii) | Setting time: | | | | | | | | | | |
| | a) Initial set, *Min,* h | 2 | — | — | — | — | — | — | 2 | — | — |
| | b) Final set, *Min,* h | 48 | — | — | — | — | — | — | 48 | — | — |
| (iv) | Compressive strength, *Min,* N/mm$^2$ | | | | | | | | | | |
| | a) at 14 days | 1.75 | 1.25 | 1.25 | — | — | — | — | 1.0 | 1.25 | 1.25 |
| | b) at 28 days | 2.8 | 1.75 | 1.75 | — | — | — | — | 1.75 | 1.75 | 1.75 |
| (v) | Transverse strength at 28 days, N/mm$^2$, *Min* | 1.0 | 0.7 | 0.7 | — | — | — | — | 0.7 | 0.7 | 0.7 |
| (vi) | Workability bumps, *Max* | — | — | — | 12 | 10 | 12 | 10 | — | — | — |
| (vii) | Volume yield ml/g. *Min* | — | — | — | 1.7 | — | 1.4 | — | — | — | — |
| (viii) | Soundness, Le Chaterlier expansion mm, *Max* | 5 | — | 5 | — | — | — | — | 10 | — | 10 |
| (ix) | Popping & pitting | Free from pop and pits | — | Free from pop and pits | — | Free from pop and pits | — | Free from pop and pits | — | — | Free from pop and pits |

## 8.4 MANUFACTURE

Fat lime is obtained by burning limestone and hydraulic lime is obtained by burning kankar.

Limestone is usually burned in some form of vertical kiln which may be a tunnel or flare shaped working on continuous (Fig. 8.1) or intermittent (Fig. 8.2) systems. The kilns may also be classified as mixed-feed and separate-feed on the basis of the arrangement of fuel and limestone. In the mixed-feed type, bituminous coal and limestone are fed into top of the kiln and in alternate layers. In the separate-feed type, the limestone is not brought into contact with the fuel during the burning process: the fuel is burned in a grate which is attached to the sides of the kiln and is so arranged that the heat produced will ascend into the stack. The mixed-feed kiln uses less fuel, but does not produce as high grade product as the separate-feed kiln. Modern furnace fired lime kilns yield about 25-35 cu m of good hydraulic lime per day.

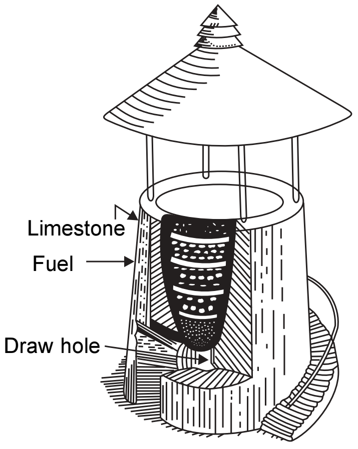

**Fig. 8.1 Continuous Kiln**

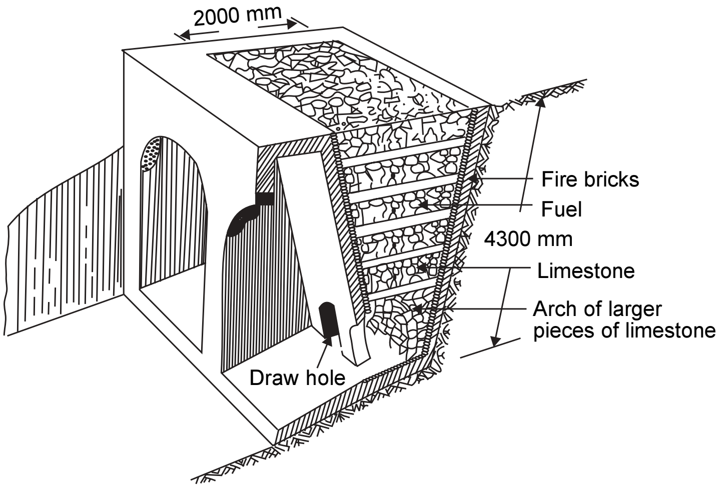

**Fig. 8.2 Intermittent Kiln**

Essentially, the process of making lime consists in heating calcite ($CaCO_3$) or magnesia limestone ($xCaCO_3 + yMgCO_3$), containing 6 to 20 per cent of argillaceous impurities, to a temperature sufficiently high to drive off the carbon dioxide. As burning, seriously injures the setting properties, high-magnesia limes should not be subjected to temperatures above 1000°C and high-calcium limes should be burned at temperatures lower than 1300°C. A part of CaO resulting from the decomposition of calcium carbonate combines in solid state with oxides $SiO_2$, $Al_2O_3$ and $Fe_2O_3$ contained in the clay minerals, to form silicates ($nCaO\ SiO_2$), aluminates ($nCaO\ Al_2O_3$) and calcium ferrites ($nCaO\ Fe_2O_3$) that are capable of hardening not only in the air, but in water as well. High calcium lime expand more in setting and shrink more in drying than magnesium limes. They are also more liable to injury through burning in slaking.

Lump lime has porous structure on burning. Limestone releases carbon dioxide which constitutes up to 49 per cent of its weight, but the volume of the product decreases only by 10 per cent which means that lump lime has a porous structure. A flow diagram for the manufacture of lime is shown in (Fig. 8.3).

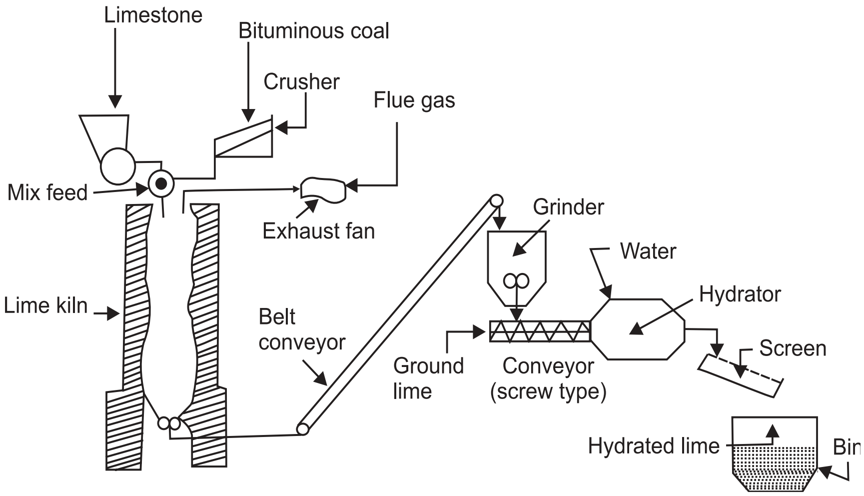

**Fig. 8.3 Flow Diagram for Lime Manufacturing**

## 8.5 SLAKING

Quick lime, obtained by burning limestone, when sprinkled with water slakes within 10 minutes and becomes powder. It is then used for various engineering purposes such as white washing, plastering, making mortars and lime putty. The process is also known as hydration of lime.

$$\underset{\text{Quick Lime}}{\mathrm{CaO}} + \mathrm{H_2O} \xrightarrow{\text{Hydration}} \underset{\text{Slaked Lime}}{\mathrm{Ca(OH)_2}} + 15.6 \text{ kcal}$$

In the above reaction high heat of hydration is generated at a temperature of about 350°C. The energy liberated during this reaction causes the lumps of quick lime to split and fall to powder. In hydration of lime the heat of hydration generated is not sufficient to break the lime to powder and therefore, the lime is broken mechanically to a suitable size and sometimes pulverised before hydration. Limes from coarse-grained stone, lump limes, and pulverized usually slake rapidly; limes from fine-grained stones, and dense lumpy limes usually slake slowly. Over burning or under burning of the limestone causes the lime to slake more slowly and injures the mortar strength.

Theoretically, the requirement of water for slaking of lime is 32 per cent of the weight of CaO. The amount of water used is 2 or even 3 times greater, depending upon composition, degree of burning and slaking methods, because a part of the water used is vapourised by the released heat. However, to avoid burning and to promote workable pastes, masons usually slake limes with 1.5 to 2 times as much water as lime.

Fat lime slakes in 2-3 hours, whereas hydraulic lime slakes in 12-48 hours. Great care should be exercised to slake the lime completely. The burned lime should be slaked soon after it is drawn from the kiln. The burned lime may also be slaked in the form of paste in slaking tanks

(Fig. 8.4) and is termed as putty. Lime, if not slaked immediately, reacts with the carbonic acid from atmosphere in presence of the moisture and becomes air slaked, forming carbonates of lime. Consequently, the lime loses its properties and becomes unsuitable for sound construction. The slaked lime should not be kept in damp places.

$$\underset{\text{Carbonic acid}}{H_2CO_3} \xrightarrow{\qquad} H_2O + CO_2$$

$$\underset{\text{Slaked lime}}{Ca(OH)_2} + CO_2 \xrightarrow{\qquad} \underset{\text{Carbonate of lime}}{CaCO_3} + H_2O$$

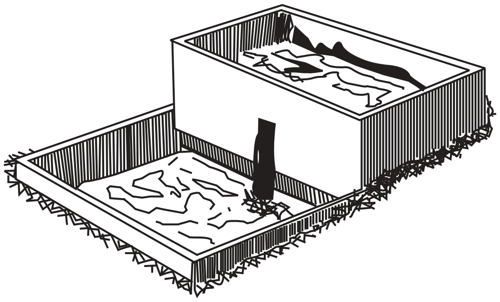

**Fig. 8.4 Slaking of Lime to Paste**

The hydration of lime is accompanied by an increase in volume which is about 2.5-3 times except for hydraulic lime where it is only 50 per cent.

The process of slaking until recent years was done at the site. But since each type of lime needs different treatment, great skill and knowledge of the type of lime being used is required. Moreover, site slaking requires a fair amount of space, which is not always readily available. Partly for this reason site slaking is being rapidly superseded by factory slaking or hydrating.

## 8.6 HARDENING

Depending on the kind of lime and its hardening conditions, distinction is made of three patterns of hardening carbonate, hydrate and hydro-silicate.

### Carbonate Hardening

Two simultaneous processes take place in lime mortars or concrete from slaked lime.

1. The mixed water evaporates and calcium oxide hydrate crystallizes out of its saturated water solution.
2. Calcium carbonate is formed in accordance with the reaction.

$$Ca(OH)_2 + CO_2 + nH_2O = CaCO_3 + (n + 1)H_2O$$

The crystallisation process of calcium oxide hydrate is very slow. Evaporation of water causes fine particles of $Ca(OH)_2$ to stick together and form large $Ca(OH)_2$ crystals which in turn grow together and form a carcass that encloses sand particles. The rate of $CaCO_3$ formation is significant only in the presence of moisture. A film of calcium carbonate appearing on the surface of the mortar during the initial period of hardening, prevents the penetration of carbon dioxide into the inside layers, and because of this the carbonisation process, which is very intensive in the presence of a sufficient amount of carbon dioxide stops almost entirely. The more intensive is the evaporation of water, the quicker is the crystallisation of calcium oxide. Therefore, hardening of lime requires an above zero temperature and a low humidity of the surrounding medium.

Pure lime paste cracks as a result of considerable shrinkage during drying; this can be prevented by adding 3.5 parts (by volume) of sand. The introduction of a prescribed amount of aggregate is advisable not only from the economic but also from the engineering stand point, as it improves hardening and reduces drying shrinkage.

The strength of mortar from slaked lime is low: after a month of hardening the compressive strength becomes 0.5–1 N/mm$^2$, rising to 5–7 N/mm$^2$ after several decades. This is due not only to greater carbonisation of mortar or concrete, but also to a certain interaction of silicate and carbonate aggregates with calcium oxide hydrate.

High strength concretes and mortars (30 to 40 N/mm$^2$) can be obtained by artificial carbonisation. Concretes from ground unslaked lime with addition of up to 0.2 per cent (by weight) of lime which speeds up carbonization and increases strength are particularly effective.

## Hydrate Hardening

It is a gradual conversion of lime mortar and concrete mixes from ground unslaked lime into a rock-like hard body, resulting from the interaction of lime with water and the formation of calcium oxide hydrate. First, lime dissolves in water to give a saturated solution, which over-saturates rapidly because water is absorbed by the remaining unslaked grains. Rapid and strong over-saturation of a mortar, prepared from unslaked lime, results in formation of colloidal masses, which appear because calcium oxide hydrate formed by mixing lime with water consists of particles very close in size to those of the colloids. Colloidal calcium hydrate coagulates quickly into a hydrogel which glues the grains together. As water is partly sucked in by the deeper layers of grains and partly evaporates, the hydrogel thickens and thus increases the strength of the hardening lime. The hydrogel formed in the process of hardening of slaked lime holds much water and its adhesiveness is poor, which is not so for hardening unslaked lime. As slaking lime hardens, crystallisation of calcium oxide hydrate increases its strength. Subsequent carbonisation of calcium oxide hydrate improves the strength of the hardened mortar.

Thus, mixing of ground unslaked lime with water brings about a hydration hardening, which is characteristic of other binding materials as well; it consists of the hydration of calcium oxide and subsequent formation of colloids and crystallisation of the hydration product. Hardening at normal temperature is also affected by the evaporation of free water in the process of drying and natural carbonisation.

The conditions which favour hydration hardening are: rapid and uniform extraction of heat released in the process of hardening, the use of forms to prevent the increase in volume of the hardening mass and the introduction of admixtures to retard hydration. The coagulation structure which appears in the process of hydration hardening is retained and serves as a medium for the crystallisation of new hydrate formation. Should the coagulation structure disintegrate because of a rise of temperature or increase in volume, the new structure will have no time to appear because of a high hydration rate of the lime, and the recrystallisation ends inside non-intergrown particles of lime. Hydration hardening may be improved by uniform burning and grinding of lime.

## Hydrosilicate Hardening

When lime-sand mixtures are treated by high-pressure steam (8-16 atm) corresponding to temperatures between 175 and 200°C, lime and silica interact in the autoclave and form calcium hydrosilicate which ensures high strength and durability of manufactured items.

In the autoclave method of hardening lime-sand materials, lime does not play the part of a binding material, whose hydration and carbonisation gives rise to a stony body of required strength at usual temperatures. In the given instance, lime is one of the two components that interact and form calcium hydrosilicate which is the chief cementing substance. The required strength results not from the physical cohesion of the binder hydrate formations with the grains of the aggregate, but from chemical interaction between the chief components of the raw materials, lime and quartz sand.

Hardening of autoclave steam-cured lime-silica materials is due to complex physical and chemical processes in three stages:

1. Formation of crystalline nuclei of hydrosilicates, growth of crystals and increase in their number, without any coalescence taking place.
2. Formation of a crystalline concretion.
3. Failure (weakening) of concretion due to recrystallisation contacts among crystals.

New formations, whose number and composition vary continually harden in the process of hydro-thermal curing of items.

## 8.7 LIME PUTTY AND COARSE STUFF

### Lime Putty

It is obtained by adding hydrated lime to water, stirring to the consistency of a thick cream and, allowing it to stand and mature for a period of about 16 hours in the case of non-hydraulic lime before using. The putty so obtained should be protected from drying out.

### Coarse Stuff

The hydrated lime is first thoroughly mixed and ground with the required quantity of sand. Then water is added and thorough mixing is done. The mix is kept to mature for about less than 16 hours in the case of hydraulic lime. Coarse stuff should be protected from drying out till it is used.

## 8.8 TESTING

### Visual Inspection

A sample of lime is examined for its colour and lumps:

1. white colour indicate fat or pure lime.
2. lumps of lime indicate quick lime or unburnt lime.

### Field Tests

The field tests usually performed on lime at site are as below:

*Test for Physical Properties:* Hydraulic limes are brush grey, brown, or dark coloured. Hydraulic limestones have a clayey taste and give out earthy smell. White colour of lime is an indication of pure variety of limestone. Shining particles on the surface of limestones indicate the presence of free salt.

*Workability Test:* A handful of mortar is thrown on the surface on which it is to be used. The area covered by the mortar and its quantity is recorded. These data indicate the workability of the lime mortar. It is a very crude field test performed with the actual mortar.

*Heat Test:* Limestone is heated for four hours on open fire; $CO_2$ escapes and it loses weight. From this the carbonate percentage in the limestone can be worked out. Lumpy form indicates quick lime or unburnt limestone. A porous structure may indicate quick lime.

*Hydraulic Acid Test:* The test is carried to know the classification and the carbonate content of lime.

When a teaspoon full of lime is put in a test tube containing 10 ml of 50 per cent hydrochloric acid, effervesence takes place. Too much of effervesence indicates high percentage of calcium carbonate in limestone. The residue at the bottom of the tube indicates percentage of inert materials present in the limestone. Abundant of liberation of $CO_2$ indicates unburnt lime.

In case of class-A lime, a good gel is formed above the layer of inert material. A thick gel indicates class-B lime and absence of gel means class-C lime.

For eminently hydraulic lime, the gel formed is thick and does not flow. Absence of gel indicates non-hydraulic or fat lime. If gel flows, it indicates feebly hydraulic lime.

*Ball Test:* Balls of stiff lime paste are made and left for six hours. They are placed in a basin of water. If expansion and disintegration of balls is observed, the lime is of type C. Little expansion and numerous cracks indicate it to be class B lime.

## Chemical Analysis

The analysis determines the cementation and hydraulic properties of lime.

$$\text{Cementation value of Lime} = \frac{2.8\text{A} + 1.1\text{B} + 0.7\text{C}}{\text{D} + 14\,\text{E}}$$

where A = Silica oxide content ($SiO_2$)
B = Aluminium oxide content ($Al_2O_3$)
C = Ferric oxide content ($Fe_2O_3$)
D = Calcium oxide content (CaO)
E = Magnesium oxide content (MgO)

***Physical Tests:*** Sampling for testing lime should be done as quickly as possible so that the material does not deteriorate. From each lot, three test samples are takes for quick lime as well as for hydrated lime. The sample size for quick lime is given in Table 8.3 are that for hydrated lime should not be less than 5 kg.

**Table 8.3 Sample Size**

| *Lot Size* (1) *Tonnes* | *Gross Sample Size for Lump Quicklime* (2) *kg* | *Gross Sample Size for Powdered Quicklime* (3) *kg* |
|---|---|---|
| Up to 100 | 500 | 250 |
| 101 to 300 | 1000 | 500 |
| 301 to 500 | 1500 | 750 |
| 501 to 1000 | 2000 | 1000 |

### Fineness Test [IS: 6932 (Part IV)]

The sieves are arranged one above the other with the coarser sieves at the top and the finer sieves at the bottom. Sieving is done with a gentle wrist motion. 100 g of the hydrated lime is placed on the top sieve and is washed through the sieves with a moderate jet of water for not more than 30 minutes. The residue on each sieve is dried at 100 ± 10°C to constant mass and weighed. The result is expressed as a percentage of mass of hydrated lime takes.

### Determination of Residue on Slaking of Quick Lime [IS: 6932 (Part III)]

Sample of quick lime is sieved through 2.36 mm IS sieve and the residue, if any, is broken and sieved again until the whole quantity passes through the sieve. The quantity of water required for slaking is usually 4 times the mass of quick lime, however, it may be as high as 8 times for certain high calcium limes.

When slaking temperature is specified by the vendor, the temperature of water is adjusted to ± 2°C and 5 kg of quicklime sample is added in small quantities within 5 minutes. During this operation, the mix should be stirred continuously. This temperature is maintained for one hour. The product is allowed to stand for 24 hours from the time the quicklime was added to water and is allowed to cool gradually to room temperature during this period. The product is stirred atleast twice during this period; the last stirring is done within one hour before the expiration of 24 hours. Now sieve first the supernatant liquid and then the remainder after stirring thoroughly the product through 850-micron IS sieve and subsequently through 300-micron IS sieve. A temporary filter cloth is fitted to the vessel. The contents of the slaking vessels are transferred on to the sieves by washing the vessel with a jet of water. The residues are washed with a jet of water and then dried at 100 ± 10°C to constant mass. The residues on the two sieves are weighed separately and are reported as percentage of quicklime taken for the test.

***Note:*** **Where slaking temperature is not specified by the vendor, two separate samples are slaked with temperature maintained at 50°C and 100 ± 2°C.**

### Workability Test [IS: 6932 (Part VIII)]

The test is conducted on a standard flow table and a truncated conical mould (Fig. 8.5).

For testing hydrated lime, the lime putty is prepared by thoroughly mixing 500 g of hydrated lime with an equal mass of water at a temperature of 27 ± 2°C and kept for 24 hours. The soaked material is then thoroughly mixed and knocked up to produce a plastic putty, by passing the material twice through the mixer.

The lime putty is adjusted to standard plastering consistency, which is indicated by an average spread of the lower part of lime putty to 110 mm with a permissible deviation of not more than 1 mm, when subjected to one pump on the standard flow table. If consistency is too stiff, more water is added, and if too wet, a small portion of water is with drawn by placing the material for a short period on a clean absorbent surface.

The putty is filled in moulds in such a way that no air bubbles or voids are trapped inside. The temperature during the test is maintained at 27 ± 2°C. The top of the table is cleaned and dried. The cone of material is applied to the center of the table and the mould withdrawn. The handle of the flow table is turned steadily and evenly at the rate of one turn per second. The

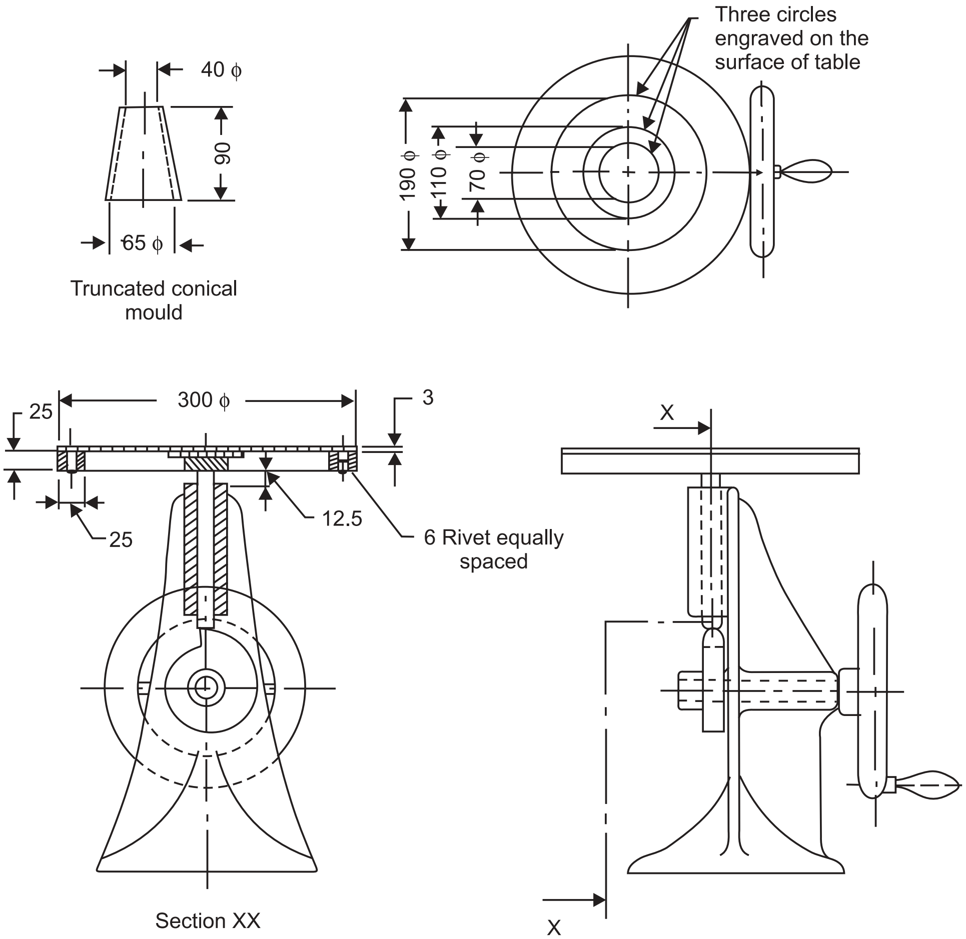

**Fig. 8.5 Standard Flow Table and Truncated Conical Mould**

average spread of material is determined by measuring three diameters of approximately 60° apart and taking the average. The number of bumps required to attain an average spread of 190 mm.

### *Setting Time Test*

The initial and final setting times of hydrated lime are determined using Vicat's apparatus in the same way as that for Portland cement. Here in this test lime putty is used instead of cement mortar.

## Soundness Test [IS: 6932 (Part IX)]

The test is done to find the quality, i.e., the unsoundness or disintegration property of lime using the Le-chatelier apparatus.

To test hydrated lime, cement, hydrated lime and standard sand 1 : 3 : 12 are mixed dry. The mix is then gauged and mixed 12 per cent by mass of water calculated on the dry mixture. Three moulds, greased internally, are placed on a small non-porous plate and filled with the mortar under test. The moulds are then covered with non-porous plates and small weights are placed over them. All the three moulds are left undisturbed for one hour. The distance between the indicator pointers is measured. "The apparatus is then kept in damp air for 48 hours and is thereafter subjected to steam at atmospheric pressure for 3 hours. The sample is cooled to room temperature and the distance between the pointers is measured again. The difference in the two measurements should not be more than 10 mm after deduction of 1mm, to allow for expansion of added cement, from the measured expansion. The figure so obtained is recorded as the net expansion due to lime.

### Popping and Pitting Test [IS: 6932 (Part X)]

Seventy gram of hydrated lime is mixed with 70 ml of clean water at a temperature of 27 ± 3°C and kept for 2 hours. The lime putty so obtained is thoroughly mixed and knocked up with a trowel. The putty is then spread over a non-porous surface and 10 g of Plaster of Paris is spread evenly over it and the whole mass mixed rapidly and thoroughly for two minutes. The gauged material is then pressed in small quantities with the aid of a broad palette knife or spatula into a ring mould 100 mm in diameter and 5 mm deep. A flat pat of putty is formed by smoothening off the top surface with not more than 12 strokes of knife. This entire process should be completed within 5 minutes from the time of adding Plaster of Paris.

Four such pats are formed and left for 30 minutes. There are then transferred to a drying oven maintained at a temperature between 35-45°C and are kept for 16 hours. If any test pat shows cracks is rejected. The test pats are then placed horizontally in a steam boiler and subjected to the action of saturated steam for 3 hours. The pats are then examined for disintegration popping or pitting

To determine the soundness of fat lime, pat rare prepared by mixing 70 g of hydrated lime, 10 g of Plaster of Paris and 70 ml of water. The pats are subjected to steam and then tested for disintegration, popping and pipping. If any of these occurs the lime is considered to be unsound.

### Volume Yield of Quicklime [IS: 6932 (Part VI)]

The Southard Viscometer is used for adjusting the consistency of the putty. Sufficient putty is put in the filter cloth, which is folded in the form of bag. It is then suspended by cord above the vessel to allow the putty to drain. The process can be accelerated by applying moderate pressure by hand on the bag. The consistency of the putty is adjusted to give a slump of 13 mm. The density of putty is determined by weighing a known volume of this putty, using the density vessel.

$$\text{Volume in ml/g of quicklime} = \frac{0.70}{d-1}$$

where d is the density of lime putty.

### Transverse Strength Test [IS: 6932 (Part VII)]

Six test specimens of size 25 × 25 × 100 mm are prepared from standard lime-sand mortar* (1 : 3). The filled mould together with its base plate are covered on to with a similar plate should

---

* the standard lime-sand mortar is prepared using standard sand and either hydrated lime or quick line.

be cured for 28 days at 90 per cent humidity. They are then immersed in water for 30 minutes. They are then taken out and placed on two parallel rollers 80 mm apart and load is applied uniformly starting from zero and increased at a rate of 150 N/minute through a third roller of same size at a point midway between the other two till the specimen breaks.

$$\text{Modulus of rupture of test specimen, } m = \frac{3WS}{2bd^2} = 0.0768\ W$$

where $m$ = modulus of rupture of the specimen in $N/mm^2$

$W$ = Breaking load in N

$S$ = Spacing between the rollers in mm

$b, d$ = The width and depth (each 25 mm) of the specimen in mm

Minimum value of m should be 1.05 $N/mm^2$ for class-A lime and 0.7 $N/mm^2$ for class-B lime.

### Compressive Strength Test [IS: 6932 (Part VII)]

Twelve cubes with sides 50 mm are prepared from standard lime-sand mortar (1 : 3). These are kept undisturbed for 72 hours in an atmosphere of at least 90 per cent relative humidity and at a temperature of 27 ± 2°C. Then the specimens are taken out of the mould and kept in the air for four days. Six of the twelve cubes are cured in water for seven days and tested in a compression testing machine, this gives the strength at 14 days. The remaining six cubes are cured for 21 days and tested thus determining the strength at 28 days. The load is steadily and uniformly applied, starting from zero increasing at the rate of 150 N/min. The crushing load divided by the area of the cube denotes the (14 and 28 days) compressive strength of mortar. The average strength of six specimens gives the compressive sterength of mortor.

***Note:*** **Those faces of cube specimens, which when moulded were in contact with the sides of the mould should be placed in contact with the surface through which the load is applied.**

## 8.9 STORAGE

Lime reacts to the moisture present in the atmosphere and that from the ground. Therefore, it should be stored with utmost care. Following are some of the precautions which should be exercised properly.

1. It should be stored in properly insulated (against moisture) close store rooms in compact heaps to avoid air slaking.
2. When delivered in the form of hydrated lime the material must be kept dry, should be stored under cover and off the ground. When delivered as quick lime for site slaking the material should be used as soon as possible after delivery, positively within a week.
3. Lime putty is stored without any deterioration for many weeks and actually improves by keeping. In case of semi-hydraulic lime, the putty must not be stored for more than 3 days of its preparation. Coarse stuff and putty obtained from hydrated eminently hydraulic lime should be used within 12 hours.

## 8.10 PRECAUTIONS IN HANDLING

The workers must be provided with goggles and respirators against high heat and dust generated during slaking. Skin protecting cream must be applied as protection against skin-burn.

## 8.11 LIME VS. CEMENT

A comparison of the binding materials, cement and lime is presented in Table 8.3.

**Table 8.3 Comparison of Cement and Lime**

| *Property* | *Lime* | *Cement* |
|---|---|---|
| Colour | White or greyish white | Dark grey or greyish brown |
| Slaking | Slaking takes place on adding Water | Hardening takes place on adding water |
| Setting | It sets slowly by taking $CO_2$ from air or by reacting with water | It sets rapidly by reacting water |
| Hardening | Slow | Rapid |
| Compressive Strength | Less | High |
| Cost | Cheap | Costly |
| Use | Suitable for ordinary construction works | Suitable for all construction works |

## EXERCISES

1. Explain the terms
   - (a) Poor lime
   - (b) Fat lime
   - (c) Hydraulic lime
   - (d) Quick lime
   - (e) Slaked lime
   - (f) Punning
2. (a) Describe the different varieties of lime.
   - (b) Why is it necessary to slake quick lime immediately after burning?
   - (c) Why is hydraulic lime unsuitable for plastering?
3. Describe briefly how lime is manufactured. Distinguish between quick, fat and hydraulic lime.
4. (a) How is hydraulic lime classified?
   - (b) State the effects of impurities present in the lime.
   - (c) What is lime putty and how is it prepared?
5. (a) Describe the method of burning lime.
   - (b) How is the lime slaked? What is the significance of slaking lime?
   - (c) Explain briefly the setting of lime.
6. (a) What are the characteristics of lime?
   - (b) State teh harmful effects of silica, sulphates and alkalis in lime.
   - (c) How is lime classified according IS specifications?
7. Briefly describe hardening of lime. How is hydrate hardening of lime different from hydrosilicate hardening.

8. Describe briefly the following tests of lime:
   (a) Field tests (b) Workability
   (c) Soundness (d) Popping and pitting test
9. Write short notes on
   (a) Use of lime as a building material
   (b) Slaking of lime
   (c) Storage of lime
   (d) Lime putty
10. (a) State the chief impurities in limestones? How do they affect the properties of lime?
    (b) Describe the various tests performed to assess the suitability of lime as cementing material.
11. Describe the following briefly:
    (a) Effect of heat on limestone
    (b) Lime mortar
    (c) Setting action of fat lime
    (d) Transverse strength test of lime
    (e) Field tests of lime
12. Enumerate the classification of lime and discuss briefly the main characteristics of each of them.
13. (a) Which will you recommend lime for white washing and plastering? Give the reasons for the choice.
    (b) Describe briefly the manufacture of lime.

## OBJECTIVE TYPE QUESTIONS

1. Pick up the correct statement(s)
   (1) $CaCO_3$ is the raw material for manufacturing lime
   (2) Kankar is an impure limestone
   (3) Coral for manufacturing lime is a sea animal
   Of the above the correct statement(s) is (are)
   (a) 1, 2 (b) 2, 3 (c) 1, 2, 3 (d) 1 only
2. Which of the following is caustic lime?
   (a) Quick lime (b) Fat lime (c) Milk lime (d) Hydraulic lime
3. Quick lime coming out of the kiln is also known as
   (a) hydrated lime (b) lump lime (c) fat lime (d) hydraulic lime
4. Hydrated lime for making mortars is slaked for
   (a) 1 day (b) 3 days (c) 7 days (d) 14 days
5. Which of the following is not used for producing fat lime?
   (a) Oolitic limestone (b) Calcareous tufa (c) Marble (d) Raw lime stone
6. The lime sets on absorbing $CO_2$ from atmosphere is
   (a) lean lime (b) feebly hydraulic lime
   (c) rich lime (d) fat lime
7. The lime used fur finishing coat in plastering is
   (a) semi hydraulic lime (b) kankar lime
   (c) magnesium lime (d) eminently hydraulic lime

8. Hydraulic lime is obtained by burning
   (a) oolitic lime stone (b) kankar
   (c) marble (d) tufa
9. Fat lime slakes between
   (a) 2-3 hours (b) 24 hours (c) 3 days (d) 7 days
10. Match List-I with List-II and select the correct answer using the codes given below the lists:

| *List-I* | *List-II* |
|---|---|
| A. Silica | 1. hydraulic properties |
| B. Clay | 2. poor cementing |
| C. Sulphates | 3. increased ratio of setting |
| | 4. reduce setting time |

Codes:

| | A | B | C |
|---|---|---|---|
| (a) | 2 | 1 | 3 |
| (b) | 4 | 2 | 1 |
| (c) | 4 | 1 | 3 |
| (d) | 2 | 3 | 1 |

## Answer Table

1. (c) 2. (a) 3. (b) 4. (a) 5. (d) 6. (a) 7. (c) 8. (b) 9. (a) 10. (a)

# 9

# Puzzolanas

## 9.1 INTRODUCTION

The term puzzolana is derived from Puzzouli, a town in Italy on the Bay of Naples near Mount Vesuvious. The sand (volcanic dust) around this town when mixed with hydrated lime was found to possess hydraulic properties. Puzzolana may be defined as a siliceous material which whilst itself possessing no cementitious properties, either processed or unprocessed and in finely divided form, reacts in the presence of water with lime at normal temperatures to form compounds of low solubility having cementitious properties. Puzzolanas may be natural or artificial, fly ash being the best known in the latter category. Before the advent of cement these were used with lime to make concrete. Currently its principal use is to replace a proportion in cement when making concrete. The advantages gained are economy, improvement in workability of concrete mix with reduction of bleeding and segregation. Other advantages are greater imperviousness, to freezing and thawing and to attack by sulphates and natural waters. In addition the disruptive effects of alkali-aggregate reaction and heat of hydration are reduced. It is generally held that the addition of natural puzzolanas reduce the leaching of soluble compounds from concrete and contributes to the impermeability of the concrete at the later ages.

The main justification for using puzzolanas is the possibility of reducing costs. If they are to reduce costs, they must be obtained locally and it is for this reason that they have not so far been much in use.

## 9.2 CLASSIFICATION

Puzzolanas are classified as natural and artificial.

***Natural Puzzolanas*** All puzzolanas are rich in silica and alumina and contain only a small quantity of alkalis. Following are some of the naturally occurring puzzolanas:

1. Clays and shales which must be calcined to become active.
2. Diatomaceous earth and opaline cherts and shales which may or may not need calcination (most active).
3. Volcanic tuffs and pumicites. Fine grained ashes form better puzzolana. However, tuffs—solidified volcanic ash—may be ground to desired fineness for use.
4. Rhenish and Bavarian trass.

***Artificial Puzzolanas*** Some of the examples of artificial puzzolanas are:

1. Fly ash
2. Ground blast-furnace slag
3. Silica fume
4. Surkhi
5. Rice husk ash

## 9.3 THE ACTIVITY OF PUZZOLANA

When mixed with ordinary Portland cement the silica of the puzzolana combines with the free lime released during the hydration of cement. This action is called puzzolanic action. The puzzolanic activity is due to the presence of finely divided glassy silica and lime which produces calcium silicate hydrate similar to as produced during hydration of Portland cement. The silica in the puzzolana reacts with the lime produced during hydration of Portland cement and contributes to development of strength. Slowly and gradually additional calcium silicate hydrate is formed which is a binder and fills up the space, gives impermeability, durability and ever increasing strength.

Hydration of Portland cement may be expressed as

$$C_3S + H_2O \rightarrow \underset{\text{(Calcium silicate hydrate)}}{\text{C-S-H}} + \underset{\text{(Lime)}}{Ca(OH)_2}$$

Lime produced combines with silica of puzzolana

$$Ca(OH)_2 + \underset{\text{(Silica)}}{SiO_2} \rightarrow \text{C-S-H}$$

Silicas of amorphous form react with lime readily than those of crystalline form and this constitutes the difference between active puzzolanas and materials of similar chemical composition which exhibit little puzzolanic activity. Since puzzolanic action can proceed only in the presence of water, enough moisture has to be made available for a long time to complete puzzolanic action.

It is commonly thought that lime-silica reaction is the main or the only one that takes place, but recent information indicates that alumina and iron if present also take part in the chemical reaction.

The optimum amount of puzzolana, as replacement for cement, may normally range between 10-30% and may be as low as 4-6% for natural pouzzolanas. It may be somewhat higher for some fly ashes.

## 9.4 EFFECTS OF NATURAL PUZZOLANAS

***On Heat of Hydration:*** The heat of hydration of a puzzolana is same as that of low heat cement.

***On Strength of Concrete:*** When puzzolanas are used the addition of an air entraining agent may enable a reduction in the amount of water than if the air entraining agent was added to concrete containing cement only. This may lead to an increase in strength and consequently less cement may be permitted for the same strength. At early ages the replacement of cement by a puzzolana usually results in a decrease in the compressive strength, but the difference becomes less and may disappear at ages of 3 months or more.

***On Shrinkage and Moisture Movement:*** It is similar to Portland cement.

## 9.5 APPLICATIONS

Puzzolana finds its chief application where the reduction in the heat of hydration is of great importance and the slower rate of gain in strength is not of much conscience, i.e., where mass concreting is to be done. Also, the improvement in workability obtained by using puzzolana causes considerable advantage in the lean harsh mixes normally used in the construction of mass causes concreting. The examples are dams, retaining walls, wharf walls, breakwaters, harbour works and massive foundations. Lime-puzzolana mixtures are used for masonry mortars, plasters and for foundation concrete. Their types and physical requirements are given in Appendix 1.

## 9.6 FLY ASH

Fly ash or pulverized fuel ash (PFA) is the residue from the combustion of pulverized coal collected by mechanical or electrostatic separators from the flue gases or power plants. It constitutes about 75 per cent of the total ash produced. The properties and composition of fly ash vary widely, not only between different plants but from hour to hour in the same plant. Its composition depends on type of fuel burnt and on the variation of load on the boiler. Fly ash obtained from cyclone separators is comparatively coarse and contains a large proportion of unburnt fuel, whereas that obtained from electrostatic precipitators is relatively fine having a specific surface of about 3500 $cm^2/g$ and may be as high as 5000 $cm^2/g$. Normally it is rather finer than Portland cement. Fly ash consists generally of spherical particles, some of which may be like glass and hollow and of irregularly shaped particles of unburnt fuel or carbon. It may vary in colour from light grey to dark grey or even brown.

Carbon content in fly ash is important consideration for use with cement; it should be as low as possible. The fineness of fly ash should be as high as possible. The silica contained in fly ash should be present in finely divided state since it combines slowly over a very long period with the lime liberated during the hydration of the cement. Curing at a temperature of 38°C has been found to greatly accelerate its contribution to the strength of concrete. Curing at high pressure and temperature in autoclave promotes the reaction between the lime liberated during hydration of cement and the silica in the fly ash. However, this reaction should tend to prevent the release of free lime to reduce efflorescence.

Fly ash is supplied in two grades; grade I and grade II. There general use is incorporating it in cement mortar and concrete and in lime pozzolana mixture. However, only grade I is recommended for manufacture of Portland pozzolana cement.

## Specifications

Fly ash consists of spherical glassy particles ranging from 1 to 150 μm, most of which passes through a 45 μm sieve. More than 40 per cent of the particles, which are under 10 microns contribute to early age strength (7 and 28 day). Particles of sizes 10 to 45 microns reacts slowly and are responsible for gain in strength from 28 days to one year. Physical and chemical requirements of fly ash are given in Tables 9.1 and 9.2.

**Table 9.1 Physical Requirements (IS: 3812)**

| *S. No.* | *Characteristics* | *Requirements* | |
|---|---|---|---|
| | | *Grade I* | *Grade II* |
| 1. | Fineness—Specific surface in $m^2/kg$, minimum | 320 | 250 |
| 2. | Lime reactivity—Average compressive strength in $N/mm^2$, minimum | 4.0 | 3.0 |
| 3. | Compressive strength for Portland-puzzolana cement | not less than 80 per cent of the corresponding plain cement mortar cubes | |
| 4. | Drying shrinkage, maximum | 0.15 | 0.10 |
| 5. | Soundness—Expansion of specimen, per cent, maximum | 0.80 | 0.80 |

**Table 9.2 Chemical Requirements (IS: 3812)**

| | | |
|---|---|---|
| Silicon dioxide + aluminium oxide + iron oxide | $S_1O_2 + Al_2O_3 + Fe_2O_3$ | 70% |
| Silicon dioxide | $S_1O_2$ | 35% |
| Aluminium oxide | $Al_2O_3$ | 15-30% |
| Carbon (in the form of unburnt fuel) | | up to 30% |
| Alkalis | $Na_2O$ | 1.5% |
| Magnesium oxide (maximum) | MgO | 5% |
| Sulphur trioxide (maximum) | $SO_3$ | 2.75% |
| Loss on ignition by mass (maximum) | | 12% |

## Effects of Fly Ash on Cement Concrete

***On Amount of Mixing Water:*** The use of fly ash in limited amounts as a replacement for cement or as an addition to cement requires a little more water for the same slump because of fineness of the fly ash. It is generally agreed that the use of fly ash, particularly as an admixture rather than as a replacement of cement, reduces, segregation and bleeding. If the sand is coarse the addition of fly ash produces beneficial results; for fine sands, its addition may increase the water requirement for a given workability.

***On Strength in Compression:*** Since the puzzolanic action is very slow, an addition of fly ash up to 30 per cent may result in lower strength at 7 and 28 days, but may be about equal at 3 months and may further increase at ages greater than 3 months provided curing is continued.

***On Modulus of Elasticity:*** It is lower at early ages and higher at later ages.

***On Curing Conditions:*** It is similar to Portland cement concrete.

***On Shrinkage of Concrete:*** Coarser fly ashes and those having a high carbon content are more liable to increase drying shrinkage than the finer fly ashes and those having a low carbon content.

***On Permeability:*** The permeability of concrete reduces on addition of fly ash to cement. 28 days pulverised fly-ash-concrete may be three times as permeable as ordinary concrete but after 6 months it may be less than one quarter permeable.

***On Resistance to Chemical Attack:*** Fly ash slightly improves the resistance of concrete to sulphate attack.

***On Heat of Hydration:*** Fly ash reduces the heat of hydration in concrete. A substitution of 30 per cent fly ash may result in a reduction of 50-60% heat of hydration.

***On Air Entrainment:*** The presence of fly ash reduces the amount of air entraining agent.

***Setting Time:*** A 30 per cent substitution of fly ash may result in an increase of initial setting time up to 2 hours.

## 9.7 CALCINED CLAY PUZZOLANA (SURKHI)

It is one of the artificial puzzolana obtained by burning clay soils at specified predetermined temperatures. In doing so the water molecules are driven off and a quasi-amorphous material, reactive with lime, is obtained. However, in practice, calcined clay puzzolana is manufactured by grinding the brick bats in the grinding mills until an impalpable powder is obtained. This puzzolana is called *surkhi* in India, *semen merah* in Indonesia and *homra* in Egypt.

The best surkhi is obtained by burning clay in field or in a kiln and is classed as grade I whereas that obtained by grinding brick bats is classed as grade II. Soils containing little amount of clay are placed alternately with fuel layers in a pit and are fired. The residue obtained from firing is friable and needs no pulverization. In the kiln method of surkhi production, 50-l00 mm clay lumps along with coal fuel are placed in shaft kiln (Fig. 9.1). Coal is fired and the clay is calcined at 600 to 1000°C depending upon the type of clay. The temperature is regulated by the air blower and feed input.

Surkhi is extensively used in making mortar and concrete as an adulterant for economy. But its chief function is to impart strength and hydraulic properties to mortar. When mixed with cement to react with lime liberated during the setting and hardening of cement it makes dense, compact and impermeable concrete.

### Specifications

The clay or clay products used in the manufacture of surkhi must not contain a high percentage of silica. A good surkhi should be clean, cherry red in colour, and free from any foreign matter. Calcined clay puzzolana should conform generally to the chemical requirements on an oven dry basis (at 105°C) as given in Table 9.3.

**Table 9.3 Chemical Requirements (IS: 1344)**

| | |
|---|---|
| Silica | Not less than 40 per cent |
| Silica + Alumina + Iron oxide | Not less than 70 per cent |
| Calcium oxide | Not more than 10 per cent |
| Magnesium oxide | Not more than 3 per cent |
| Sulphuric anhydride | Not more than 3 per cent |
| Soda and potash | Not more than 3 per cent |
| Water-soluble alkali | Not more than 0.1 per cent |
| Water-soluble material | Not more than 1 per cent |
| Loss on ignition | Not more than 10 per cent |

The physical requirement are same as that given in Table 9.1 except that for soundness which is not applicable.

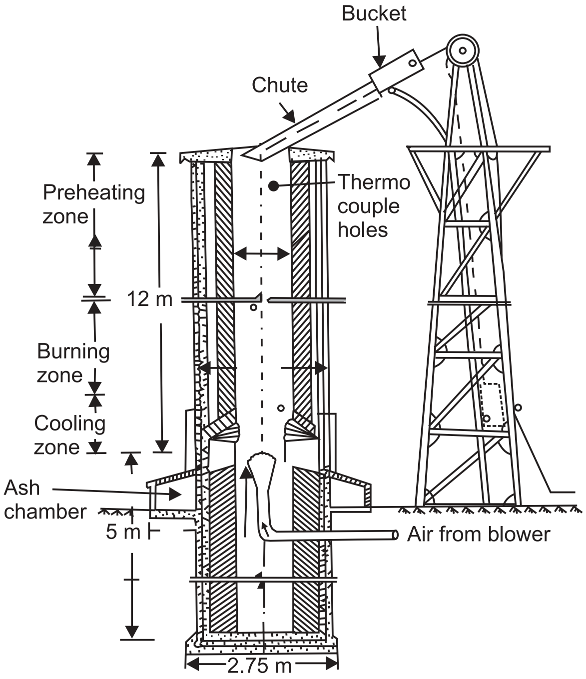

**Fig. 9.1 Vertical Shaft Kiln**

## 9.8 GROUND BLAST FURNACE SLAG

Blast furnace slag is a by product obtained while smelting iron ore in blast furnace. By melting the iron ore at 1400-1600°C pig iron is produced and the floating impurities, containing mainly lime, silica and alumina from the blast furnace slag. By slow cooling of the slag crystalline material is produced, which is used as aggregate and has no cementing properties. Glassy pallets (> 4 mm) produced on rapid cooling form excellent light weight aggregate and granules (> 4 mm) on grinding possess hydraulic properties. This granulated ground blast furnace slag (GBFS) is used for the production of blast-furnace cement. The specific surface is 3000 to 3500 $cm^2/g$. The specifications of GBFS are given in Table 9.4.

The ground blast furnace slag exhibits hydraulic action in the presence of calcium hydroxide liberated by Portland cement when hydrated. The ground slag is blended with Portland cement to produce Portland blast furnace slag cement, the proportion of the former not exceeding 65 per cent. The early strength of the cement so produced might be less but the ultimate strength is comparable. Because of low heat of hydration the ground blast furnace slag cement finds its application in mass concreting. The other advantages of addition of blast furnace slag to cement are improved workability, resistance to chemical attack and the protection provided to reinforcement that makes it suitable for reinforced concrete and prestressed concrete.

**Table 9.4 Specifications of GBFS (IS: 12089)**

| *Constituents* | *Per cent* |
|---|---|
| Manganese oxide, *max* | 5.5 |
| Magnesium oxide, *max* | 17.0 |
| Sulphide sulphur, *max* | 2.0 |
| Glass content, *min* | 85.0 |
| Indices | |
| $\frac{\%C1 + /\ I1 + 1/3\ AN_2 1_3}{5i1_2 + 2/3\ AN_2 1_3}$ | ≥ 1.0 |
| or | |
| $\frac{\%C1 + /\ I1 + AN_2 1_3}{5i1_2}$ | ≥ 1.0 |
| $\frac{\%C1 + \%_2 5 + ½\ /\ I1 + AN_2 1_3}{5i1_2 + /\ P1}$ | ≥ 1.5 |
| Where MnO in the slag is more than 2.5 per cent | |

## 9.9 SILICA FUME

Silica fume also called *micro silica*, is a light to dark grey cementitious material composed of at least 85 per cent ultra fine, amorphous non-crystalline (glassy) spherical silicon dioxide ($SiO_2$) particles. It is produced as a by-product during the manufacture of silicon metal or ferrosilicon alloys by reduction of high purity quartz in a submerged-arc electric furnace heated to 2000°C with coal coke and wood chips as fuel. The individual particles are extremely fine, approximately 1/50th the size of an average Portland cement particle (0.1 to 0.3 µm). The efficiency of silica fume depends upon its mineralogy and particle size distribution. The extremely fine particle size, large surface area and high content of highly reactive amorphous silicon dioxide give silica fume the super pozzolanic properties.

The effect of silica fume can be explained through two mechanisms—the pozzolanic reaction and the micro filler effect. Like other pozzolanas, silica fume does not have any binding property, but it reacts with $Ca(OH_2)$ liberated on hydration of cement. When water is added to cement, hydration occurs forming two primary products. The first product is calcium-silicate-hydrate (C-S-H) gel, that is cementitious and binds the aggregate together in concrete and the other product is calcium hydroxide $Ca(OH_2)$ which comprises up to 25 per cent of volume of hydration products. Silica fume reacts with calcium hydroxide to produce more aggregate binding C-S-H gel, simultaneously reducing calcium hydroxide. The net result is an increase in strength and durability. The second mechanism is through the *micro filler effect.* The extreme fineness of silica fume allows it to fill or pack the microscopic voids between cement particles and especially in the voids at the surface of the aggregate particles where the cement particles cannot fully cover the surface of the aggregate and fill all the available space. This so called *interface zone* influences the properties of the concrete. The effect is credited with greatly reduced *permeability* and improved paste to aggregate *bond,* and ultimate strength of concrete.

***Advantages:*** There are various advantages in using silica fume such as reduction in bleeding and segregation of fresh concrete, and improvements in the strength and durability characteristics of hardened concrete. The combination of high reactivity and extreme fineness results in the possibility of producing more dense concrete with a very low porosity, the pores being small and discontinuous, and therefore, with a high strength and a low permeability.

***Physical and Chemical Properties:*** The specific gravity of silica fume is 2.20. The silica fume is available as—produced in untensified from with bulk density of 200-300 kg/m$^3$; densified from with bulk density of 500-600 kg/m$^3$; in the form of micro pellets with bulk density of 600-800 kg/m$^3$; or in a slurry form with the desired concentration (generally with density of 1400 kg/m$^3$). The other basic characteristics are: specific surface area of 1500-2000 cm$^2$/g, standard grade slurry pH value of 4.7, specific gravity of 1.3-1.4 and dry content of micro silica of 48-52 per cent.

***Workability:*** With the addition of silica fume the slump loss with time is directly proportional to the increase of silica fume content. This is simply due to the introduction of large surface area in the concrete mix by its addition. Although the slump decreases but the mix is highly cohesive. However, with the adjustment in the aggregate grading and by the use of super plasticizer the demand for additional water can be minimized.

***Segregation and Bleeding:*** Silica fume reduces bleeding significantly. This effect is caused mainly by the high surface area of the silica fume to be wetted, thereby reducing the free water left in the mixture for bleeding. Moreover, the silica fume reduces bleeding by physically blocking the pores in the fresh concrete. In the absence of bleeding and due to slow movement of water from interior to the surface, it is essential to finish the concrete as soon as possible after it has been placed and compacted to protect the surface from drying out. It therefore, requires early curing; membrane curing is most effective.

***Setting Time:*** The addition of silica fume in small amounts to ordinary concrete mixtures (250-300 kg/m$^3$) has no significant effect on setting times. However, set retarding occurs with the increased silica fume content. It can also be used in combination with fly ash or blast-furnace-slag to develop strength at early ages.

***Applications:*** The attributes of silica fume have found their use in shotcrete applications, pumped concrete, mining and chemical industries. The high strength concrete made with silica fume provides high abrasion/erosion resistance. Silica fume influences the rheological properties of the fresh concrete, the strength, porosity and durability of hardened mass. Silica fume concrete with low water content is highly resistant to penetration by chloride ions.

## 9.10 RICE HUSK ASH

The combustion of agricultural residues volatises the organic matters and a silica-rich ash is produced. Of all the agricultural wastes, rice husk yields the largest quantity of ash with about 93 per cent silica which gives it puzzolanic properties.

When burned in ordinary way rice husks produce a crystalline silica ash. However, if burned under suitable conditions, a highly reactive black non-crystalline silica residue having puzzolanic properties is produced. Temperature and duration of combustion are of utmost importance for good quality rice husk ash. The right temperature is 700°C for 2-3 hours. Thus, a controlled combustion of rice husk in electricity generation plants produces amorphous or non-crystalline silica with about 85-90 per cent cellular particles. These particles are highly micro porous and possess a very high specific surface ($5 \times 10^5$ to $10 \times 10^5$ cm$^2$/g).

Rice husk ash when mixed with lime, gives a black cement. It can also be mixed with Portland cement and 28 day strength upto 55 MPa can be obtained. Rice husk ash cements containing not more than 20 per cent of lime are acid-resisting. To improve its reactive properties the rice husk ash should be ground in ball mills for about one hour. Concrete produced with rice husk ash display low permeability and no bleeding at all. The major drawback of rice husk ash is that it is very strong absorbent of sodium, potassium and other ions which are good conductors of electricity. It can replace cement in mortars by 30 per cent.

The rice husk mixed with 20-50% hydrated lime is ground in a ball mill to produce ASHMOH, a hydrated binder suitable for masonry, foundation and general concerting. When rice husk is mixed with cement instead of lime, the hydraulic binder is termed as ASHMENT.

Rice husk ash can also be used with lime sludge obtained from sugar refineries. The dried lime sludge is mixed with an equal amount of crushed rice husk. It is then mixed with water and tennis ball size cakes are prepared and sun-dried. The cakes so prepared are fired to produce powder which can be used as a hydraulic binder.

Rice husk ash when mixed with soil (20 per cent), instead of lime sludge, produces excellent binding properties. This binder when used as 30 per cent in mixture with Portland cement gives the properties of Portland puzzolana cement.

## EXERCISES

1. What is puzzolana? How is it classified?
2. Name different artificial puzzolanas. What are the properties of puzzolana?
   State the uses for which different puzzolanas can be considered.
3. Write short notes on
   (a) Fly ash (b) Surkhi
   (c) Blast furnance slag (d) Rice husk ash
4. Discuss briefly the various effects of adding puzzolanas to cement concrete.
5. What are the conditions mainly accentuating the puzzolanas to become active?
6. Write short notes on
   (a) Puzzolanic activity (b) Silica fume
   (c) Calcinid clay puzzolana.

## OBJECTIVE TYPE QUESTIONS

1. Which of the following is not true with regards to replacement of cement partly by puzzolana in making concrete?
   (a) Impermeable concrete at later ages
   (b) More resistance to sulphate attack
   (c) Reduction in bleeding and segregation
   (d) Reduction in setting time.
2. Which of the following is not natural puzzolana?
   (a) Volcanic tuff (b) Diatomaceous earth
   (c) Surkhi (d) Rhenish

3. When combined with cement which of the following constituents of puzzolana combine with free lime released during the hydration of cement?

| | |
|---|---|
| (a) $SiO_2$ | (b) $Al_2O_3$ |
| (c) $Fe_2O_3$ | (d) MgO |

4. The best application of puzzolana in cement concrete is in

| | |
|---|---|
| (a) dams | (b) bridges |
| (c) RCC slabs | (d) domes |

5. Consider the following statements with regards to fly ash to be used for making concrete
   1. The carbon content should be as low as possible
   2. The fineness of fly ash should be as high as possible
   3. The silica in fly ash should be in finely divided state

   Of the above statements

| | |
|---|---|
| (a) only 1 is correct | (b) 1, 2 are correct |
| (c) 1, 2, 3 are correct | (d) 2, 3 are correct |

6. Surkhi is added to lime mortar to

| | |
|---|---|
| (a) prevent shrinkage | (b) decrease setting time |
| (c) increase bulk | (d) impart hydraulicity |

7. Blast furnace slag has approximately
   (a) 45% calcium oxide and about 35% silica
   (b) 50% alumina and 20% calcium oxide
   (c) 25% magnesia and 15% silica
   (d) 25% calcium sulphate and 15% alumina
8. Consider the following statements:

   Puzzolana used as an admixture in concrete has the following advantages:
   1. It improves workability with lesser amount of water
   2. It increases heat of hydration and so sets the concrete quickly
   3. It increases resistance to attack by salts and sulphates
   4. It leaches calcium hydroxide

   Select the correct answer using the codes given below:

   Codes:

| | |
|---|---|
| (a) 1, 2, 3 and 4 | (b) 1, 2 and 4 |
| (c) 1 and 3 | (d) 2, 3 and 4 |

## Answer Table

1. (d) 2. (c) 3. (a) 4. (a) 5. (c) 6. (d) 7. (a) 8. (c)

# 10

# Concrete

## 10.1 INTRODUCTION

Concrete a composite man-made material, is the most widely used building material in the construction industry. It consists of a rationally chosen mixture of binding material such as lime or cement, well graded fine and coarse aggregates, water and admixtures (to produce concrete with special properties). In a concrete mix, cement and water form a paste or *matrix* which in addition to filling the voids of the fine aggregate, coats the surface of fine and coarse aggregates and binds them together. The matrix is usually 22-34% of the total volume. Freshly mixed concrete before set is known as *wet* or *green* concrete whereas after setting and hardening it is known as *set* or *hardened* concrete. The moulded concrete mix after sufficient curing becomes hard like stone due to chemical action between the water and binding material. It would be impossible to discuss all the aspects of this material in few pages and the discussion is confined to the general characteristics and quality tests necessary for its use by civil engineers and architects.

Most of the ancient structures and historical buildings had been constructed with lime concrete. With the advent of cement, the use of lime concrete has been confined to making bases for concrete foundations and roof terracing. The major factors responsible for wide usage of cement-concrete are mouldability, early hardening, high early compressive strength, development of desired properties with admixtures to be used in adverse situations, suitability for guniting, pumpability and durability. Most of the chapter is devoted to cement concrete because of its versatility. The simple reason for its extensive use in the construction of almost all civil engineering works is that the properties can be controlled within a wide range by using appropriate ingredients and by special mechanical, physical and chemical processing techniques. Buildings—from single storey to multistorey, bridges, piers, dams, weirs, retaining walls, liquid retaining structures, reservoirs chimneys, bins, silos, runways, pavements, shells, arches, railway sleepers are but a few examples of cement concrete applications.

## 10.2 CLASSIFICATION

***Based on Cementing Material:*** Concretes are classified as lime concrete, gypsum concrete and cement concrete.

***Based on Perspective Specifications:*** The cement concrete is specified by proportions of different ingredients, e.g., 1 (cement) : 1.5 (fine aggregate) : 3 (coarse aggregate). It is presumed that by adhering to such perspective specifications satisfactory performance may be achieved. The usual mix proportions of cement concrete are given in Table 10.1. Here, M refers to the mix. This type of concrete mix is also known as nominal mix. Conventional nominal mix proportions have limited significance, since the quantity of fine aggregate is fixed irrespective of the cement content, water-cement ratio and the maximum size of aggregate to be used. The proportions of materials of nominal mix concrete as given in Table 10.1 are prevalent in field. However, IS: 456 restricts its use only up to M-20 grade.

**Table 10.1 Mix Proportions of Cement Concrete**

| | | | | |
|---|---|---|---|---|
| Grade of concrete | M10 | M15 | M20 | M25 |
| Mix proportion | 1:3:6 | 1:2:4 | 1:1/½:3 | 1:1:2 |
| Perspective characteristic Strength | 10 | 15 | 20 | 25 |

***Based on Performance Oriented Specifications:*** When the concrete properties such as strength, water-cement ratio, compaction factor, slump, etc., are specified the concrete may be classified as designed-mix concrete.

For a design mix concrete the mix is designed to produce the grade of concrete having the required workability and a characteristic strength not less than the appropriate values as specified in Table 10.2.

***Based on Grade of Cement Concrete:*** Depending upon the strength (N / mm$^2$) of concrete cubes (150 mm side) at 28 days, concrete is classified as given in Table 10.2.

**Table 10.2 Grades of Cement Concrete**

| Grade | M5 | M7.5 | M10 | M20 | M25 | M30 | M35 | M40 | M45 | M50 | M55 |
|---|---|---|---|---|---|---|---|---|---|---|---|
| Characteristic strengh | 5 | 7.5 | 10 | 15 | 20 | 25 | 30 | 40 | 45 | 50 | 55 |

It is further classified as low strength concrete (< 20 N / mm$^2$), medium strength concrete (20–40 N / mm$^2$) and high strength concrete (>40 N / mm$^2$).

***Based on Bulk Density:*** On the basis of density, concrete is classified as super heavy (over 2500 kg / m$^3$), dense (1800-2500 kg / m$^3$), light weight (500–1800 kg / m$^3$) and extra light weight concrete (below 500 kg / m$^3$).

***Based on Place of Casting:*** When concrete is made and placed in position at the site it is known as *in-situ* concrete and when used as a material for making prefabricated units in a factory is known as *precast* concrete.

## 10.3 PRODUCTION

A good quality concrete is essentially a homogeneous mixture of cement, coarse and fine aggregates and water which consolidates into a hard mass due to chemical action between the cement and water. Each of the four constituents has a specific function. The coarser aggregate acts as a filler. The fine aggregate fills up the voids between the paste and the coarse aggregate. The cement in conjunction with water acts as a binder. The mobility of the mixture is aided by the cement paste, fines and nowadays, increasingly by the use of admixtures.

Most of the properties of the hardened concrete depend on the care exercised at every stage of the manufacture of concrete. A rational proportioning of the ingredients of concrete is the essence of the mix design. However, it may not guarantee of having achieved the objective of the quality concrete work. The aim of quality control is to ensure the production of concrete of uniform strength from batch to batch. This requires some rules to be followed in the various stages of concrete production and are discussed as follows. The stages of concrete production are:

1. Batching or measurement of materials
2. Mixing
3. Transporting
4. Placing
5. Compacting
6. Curing
7. Finishing

### Baching of Materials

For good quality concrete a proper and accurate quantity of all the ingredients should be used. The aggregates, cement and water should be measured with an accuracy of ± 3 per cent of batch quantity and the admixtures by 5 per cent of the batch quantity. There are two prevalent methods of batching materials, the volume batching and the weigh batching. The factors affecting the choice of batching method are the size of job, required production rate, and required standards of batching performance. For most important works weigh batching is recommended.

#### *Volume Batching*

Volume batching is generally recommended for small jobs only. The amount of each solid ingredient is measured by loose volume using standard box known as gauge box (Fig. 10.1). The amount of solid granular material in a cubic meter will be an indefinite quantity. As an example, volume of moist sand in a loose condition weighs much less than the same volume of dry compacted sand. Cement is always measured by weight, irrespective of the method of batching.

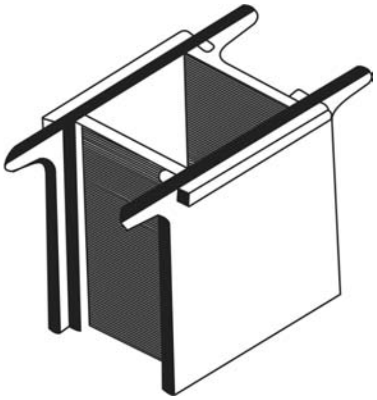

**Fig. 10.1 Wooden Box for Gauging Aggregates**

The volume of a bag of cement (50 kg) is 0.035 $m^3$. The volume of one gauge box is made equal to 0.035$m^3$. The gauge boxes are made comparatively deeper with narrow top surface to facilitate easy estimation of top level. Correction to the effect of bulking of fine aggregate should be made if volume batching is adopted since the density of water is in kg/L, water is measured either in kg or litres.

### *Weigh Batching*

For all important works weigh batching is used. Different types of weigh batchers are used. For smaller works manual batching is done. All the operations of weighing and batching of the ingredients are done manually. The weighing may also be done by ordinary platform weighing machines. For large size works weigh bucket equipments are used. The weigh buckets are fed from hoppers and these discharge the ingredients by gravity, straight into the mixer.

Automatic batching plants ranging from small to large capacity and manually or electrically operated are available. However, they operate on same principle. By pressing a button the weighing of all the different materials is put into motion and the flow of each is cut-off when the correct weight is reached. Some of the recent batchers record graphically the weight of each material delivered to each batch.

In weigh batching water is not added by graduated buckets as the water may spill over during its addition. A horizontal or vertical tank is fitted to the mixer. The filling is so designed to have a control to admit any desired quantity of water.

## Mixing

The object of mixing is to make the concrete mass homogeneous and uniform in colour and consistency. All the aggregate particles should have a coat of cement paste and all the ingredients of the concrete should blend into a uniform mass. The mixing is done either by hand or by machine called mixer.

### *Hand Mixing*

It is used for small jobs. Hand mixing is done over an impervious floor. Measured quantities of coarse aggregate and fine aggregate are spread over the floor in alternate layers. Then cement is poured over it and the ingredients are mixed dry with shovel until uniformity in colour is achieved. This mix is spread out in thickness of 200 mm and water is sprinkled. The mix is kept on turning over till a uniform colour is achieved. As the hand mixing cannot be thorough, it is desirable to add some more cement (10%) to cater for the possible inferior concrete produced by this method.

### *Machine Mixing*

For quality works mixing is carried out by mixer. Mixers can be broadly classified as batch mixers and continuous mixers. The batch mixers produce concrete batch by batch with time interval, whereas continuous mixers produce concrete continuously till plant is working. Batch mixers are used for small and medium size works. Continuous mixers are used for large size works, e.g., dams. A typical vertical batching mixing plant for large size work is shown in Fig. 10.2.

Batch mixer may be of pan type or drum type (Fig. 10.3). The drum type may be further classified as tilting (T), non-tilting (NT), or reversing (R) type, based on the technique of

Fig. 10.2 Vertical Batching Mixing Plant

discharging the mixed concrete. These are designated by a number representing its nominal mixed batch capacity in litres. The standard size of the mixers available are as follows:

Tilting: 85T, 100T, 140T, 200T
Non-tilting: 200NT, 280NT, 340NT, 400NT, 800NT
Reversing: 200R, 280R, 340R, 400R.

Sometimes the mixers are specified by two quantities, the total volume of ingredients added and the volume of concrete produced. For example 285/200-litres mixer takes 285 litres of ingredients and yields 200 liters of concrete.

*Tilting Mixers:* The tilting mixers may be hand fed or loader (skip) fed. The mixer is generally bowl shaped or double conical frustum type. It can be tilted for discharging concrete. Blades

**Fig. 10.3 Drum-type Batch Mixer**

are fixed inside the drum. The revolving drum with the mixing blades gives lifting and free fall to the mix, combes and agitates it. The mixed concrete is discharged from the open top of the drum by tilting it downwards. The concrete tips out rapidly under gravity in an unsegregated mass as soon as the drum is tilted. These mixers may be used to their advantage for mixes of low workability and containing large size aggregate. The disadvantage of these mixers lies in the fact that some mortar adheres to the drum and is left out in the drum during discharging. To check this some amount of mortar is mixed in the mixer before the first batching called *buttering.* A typical tilting mixer is shown in Plate 1.

*Non-tilting Mixer:* It consists of a Non-tilting cylindrical drum with blades inside and two circular openings at the two ends. The drum rotates about a horizontal axis (Fig. 10.4). The ingredients are fed from one opening and the mix discharged from the other opening at the other end by at inclined chute. The drawback is the segregation that occurs owing to slow rate of discharge.

*Reversing Drum Mixer:* These are also known as forced action type mixers and are used for large size works. It consist of a horizontal non-tilting type drum (Fig 10.5). It has two sets of blades. One set of blades mixes the mix while drum is rotated in one direction. The second set of blades discharges the mix when the drum is reversed.

*Pan-type or Stirring Mixer:* These are non-mobile mixers and are used either as a central mixing plat or at precast concrete factory. Primarily these are used for making mortar but are also used efficiently for stiff and cohesive mixes. The rollers and blades rotate in a rolling pan.

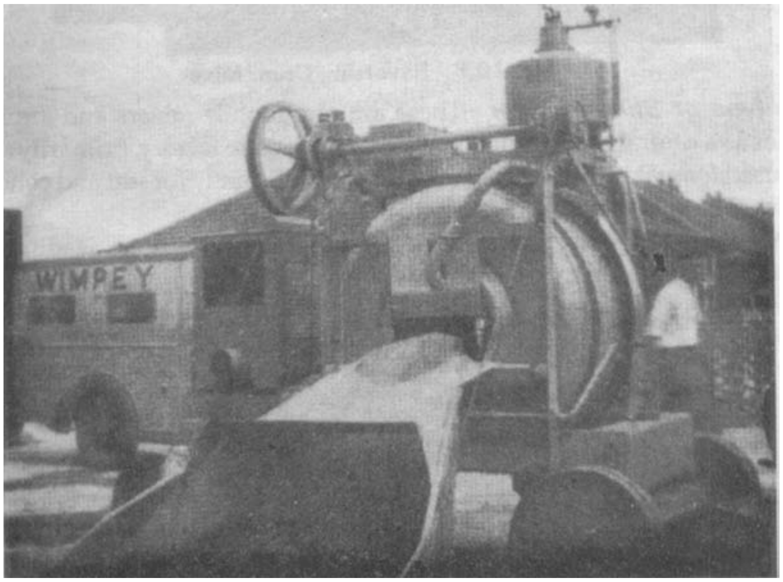

**Fig. 10.4** Non-tilting Drum Type Concrete Mixer, Provided with a Vertical Water Measuring Tank

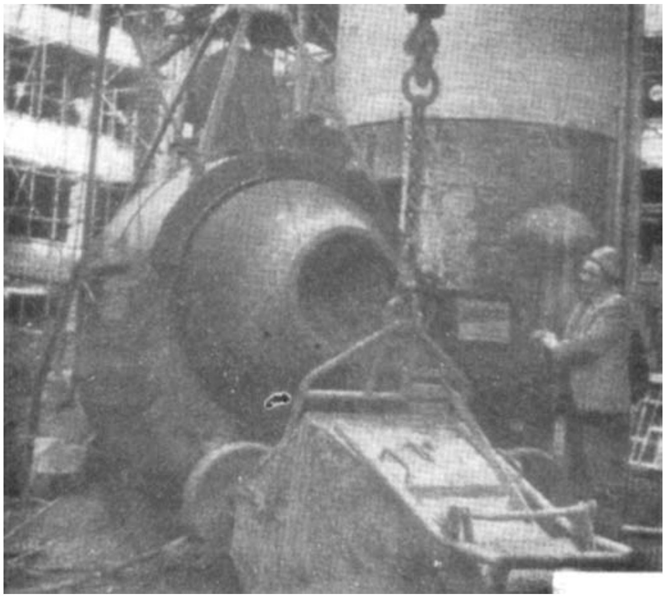

**Fig. 10.5** Reversing Drum Mixer

Apart from mixing the ingredients, they also produce kneading and crushing action. A pan type mixer is shown in Fig. 10.6. These are also known as dual drum mixers and are used for mixing concrete for roads or pavements. The drum comprises of two hemispherical halves, rotating on a horizontal shaft. One half of the drum is attached to the end of the shaft and the other half is free to slide over the shaft allowing the drum to open at the centre. A rubber joint and adjustable closing pressure ensures a perfect sealing when the drum is closed. Due to difference in circumferential speeds because of the design of blades cross flow is created which forces the concrete towards the centre causing turbulence and produces a perfect homogeneous mix. The rotating sliding drum-half can be retracted for discharge of concrete in few seconds. The concrete produced by this type of mixers show no segregation.

*Transit Mixer:* Truck mounted mixers also know as transit mixers (Fig. 10.7(a)) are very popular and have replaced the dumpers and agitator cars used earlier to transport fresh concrete from the batching plant to the site. Transit mixers of capacity 4 to 12 cum mounted on truck chesis are available. These mixers are not very efficient and need long mixing duration depending on the extent of dryness in the mix. Their function is mainly to keep the mix in an agitated condition. With the development of twin fin process mixer (Fig. 10.7(b)), the transit mixers have become more efficient. These mixers in addition to the outer spirals have two opposed inner spirals. The outer spirals convey the mix materials towards the bottom of the drum while the opposed mixing spirals push the mix towards the feed opening. The repeated counter current mixing process is carried out within the mixer drum. A number of special nozzles provided on the lower side of inner mixing spirals, precisely and uniformly spray water on the mix under pressure along the entire length of the drum. This results in through mixing of the entire drum contents within a short time. Hence, production of high quality structural concrete in the transit mixer is possible at a faster rate.

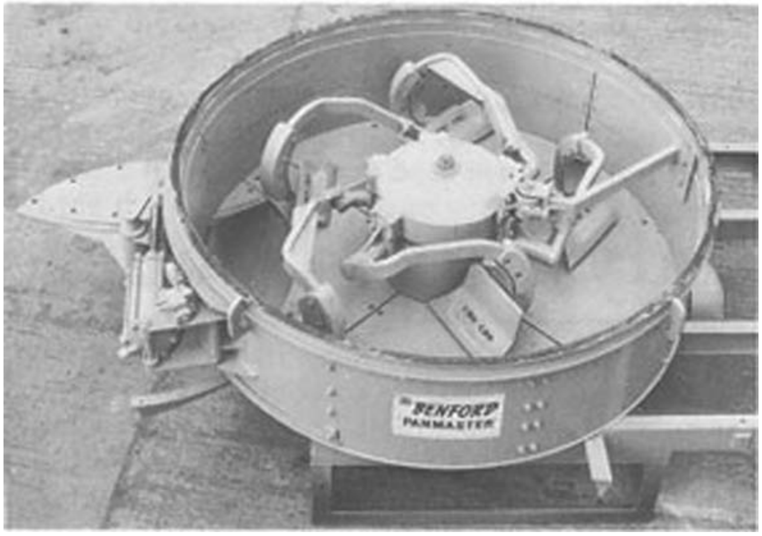

**Fig. 10.6 Pan-type Drum Mixture**

(a) Transit Mixer Driven by Truck Engine

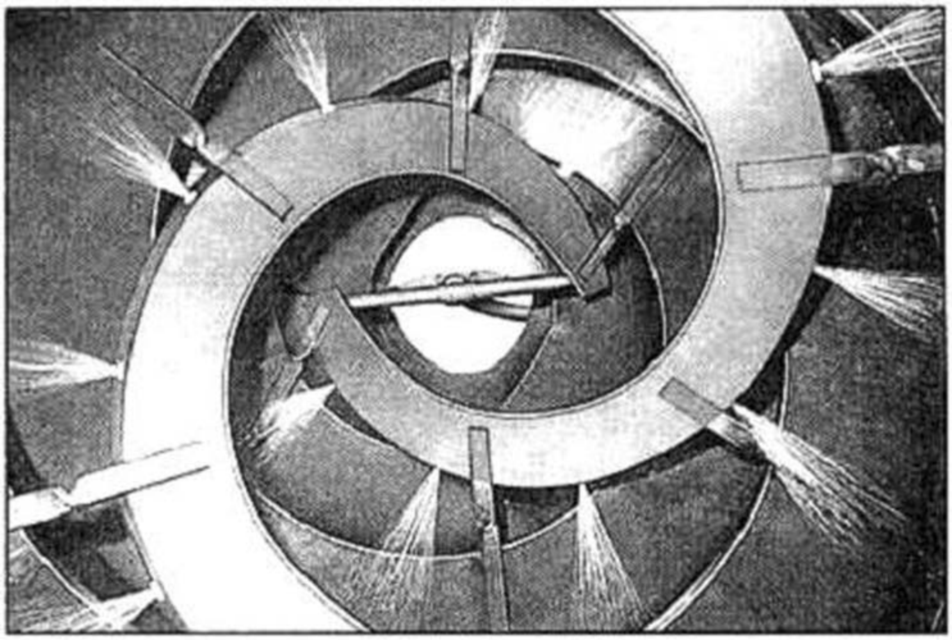

(b) Interior of Twin Fin Transit Mixer Drum with Water Spray Arrangement

**Fig. 10.7 Transit Mixer**

### *Charging the Mixer and Mixing Time*

The order of feeding the ingredients into the mixer is as follows:

About 25 per cent of water required for mixing is first introduced into the mixer drum to prevent any sticking of cement on the blades and bottom of the drum. Then the ingredients are discharged through the skip. In the skip the sequence of loading should be to add first half the coarse aggregate then half the fine aggregate and over this total cement and then the balance aggregates. After discharging the ingredients into the drum the balance water is introduced. The mixing time is counted from the instant complete water is fed into the mixer.

The speed of the mixers is generally 15 to 20 rpm. For proper mixing, the number of revolutions per minute required by the drum are 25 to 30. Time of mixing also depends on capacity of mixer and is given in Table 10.3.

**Table 10.3 Time of Mixing**

| *Capacity of Mixer* | *Minimum mixing time (minutes)* | |
|---|---|---|
| *(cum)* | *Natural aggregates* | *Manufactured aggregates* |
| ≥ 3 | 2 | 2.5 |
| 2 | 1.5 | 2 |
| ≤ 1 | 1.25 | 1.5 |

A poor quality of concrete is obtained if the mixing time is reduced. On the other hand if the mixing time is increased it is uneconomical. However, it is found that if the mixing time is increased to 2 minutes the compressive strength of concrete produced is enhanced and beyond this time the improvement in compressive strength is insignificant. A prolonged mixing may cause segregation. Also, due to longer mixing periods the water may get absorbed by the aggregates or evaporate resulting in loss of workability and strength.

## Transporting

Concrete should be transported to the place of deposition at the earliest without the loss of homogeneity obtained at the time of mixing. A maximum of 2 hours from the time of mixing is permitted if trucks with agitator and 1 hour if trucks without agitators are used for transporting concrete. Also it should be ensured that segregation does not take place during transportation and placement. The methods adopted for transporting concrete depend upon the size and importance of the job, the distance of the deposition place from the mixing place, and the nature of the terrain. Some of the methods of transporting concrete are as below:

*Mortar Pan:* This is the most common method of transporting concrete. This is labour intensive method wherein the pans are passed from hand to hand and is slow and expensive method. Since pan conveys small quantity of concrete, more and more concrete area is exposed to atmosphere during transportation. This may lead to evaporation of water from concrete particularly in hot weather and under conditions of low humidity. In this method of transporting concrete can be deposited with equal ease on above or below the ground level without segregation.

*Wheel Barrow:* Wheel barrows (Fig. 10.8) are used for transporting concrete to be placed at ground level. These are used for concreting rigid payments. For long hauls due to uneven ground surface segregation may take place. To check this, the barrows are provided with pneumatic wheels instead of steel wheels. Alternatively, wooden plank way is made over which barrows are moved to check vibrations in barrow and thus result in reduced segregation. These are most useful for small jobs, small hauls, and over muddy ground. The average capacity of a wheel barrow is 35 litres (80 kg).

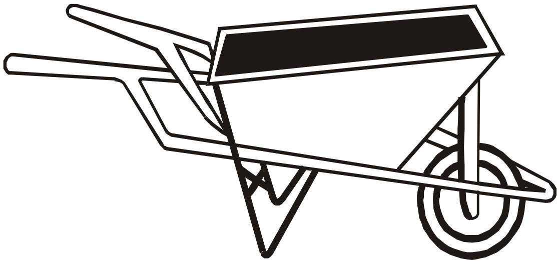

**Fig. 10.8 Wheel Barrow**

*Chutes:* Chutes are used to transport concrete below the ground levels. These are made with metal sheets with a slope more than IV: 2.5H to ensure that unloaded concrete slides easily without segregation. This method of transporting concrete should be avoided until unevitable such as lack of space or congested reinforcement.

*Dumper:* Dumpers, lorries or, trucks are used economically for hauls up to 5 km. Dumpers are usually of capacity 2 to 3 cu m whereas trucks are of 4 cu m capacity. For long hauls agitators are used to prevent segregation. The concrete should be covered with tarpaulins to prevent evaporation of water from concrete. A truck mixer is shown in Fig. 10.7(a).

*Bucket and Ropeway:* These are used when concreting is to be done in a valley or for construction work of piers, dams etc. The bucket is brought close to the mix site, filled and moved over ropeway to the site of deposition. The bucket may be of tilting type or with a gate at bottom for discharging concrete. Concrete should be discharged from the smallest height.

*Belt conveyor:* The use of belt conveyors for transporting concrete is very little. The two main objections are segregation and drying, and stiffening of concrete. Concrete segregates due to steep slopes, changes of directions, and the points where belt passes over rollers. The drawback is that the concrete will have to be remixed at the place of deposition which is not recommended.

*Skip and Hoist:* This is the most useful and advantageous method of transporting concrete for multistorey buildings. The mixer feeds the skip which moves up over rails up to the level of deposition. If height of travel is too much, the concrete may require a turning over before deposition in to the place.

*Pumping:* Pumping of concrete is done for multistorey buildings, tunnels, and bridges. The concrete is fed from the hopper into the pump cylinder largely by gravity, assisted by the vacuum created on the suction stroke of the piston and forced into the pipe line on the pressure stroke. The pipes are made of steel, aluminium, or plastic of sizes ranging from 80 to 200 mm diameter. The aluminium pipes have a draw back of formation of hydrogen gas and are not recommended. The pumps of capacity 15 to 150 $m^3$/ hr are available. These can pump concrete 400 m horizontally and up to 80 m vertically. The pumpable concrete should be cohesive and fatty. It should have a slump of 50 to 100 mm or even more and a compacting factor of 0.9 to 0.95. Pumping compacts the concrete partially and reduces the slump by about 25 per cent at the delivery end. Sometimes, admixtures are added to offer additional lubrication, reduced bleeding, and segregation. Generally, air entraining admixtures are used giving an air content of 3 to 5 per cent.

At the end of the work, the pipe line is cleared off concrete by a plunger, or *go devil*. The pipe line is then cleared by washing of all the cement slurry.

## Placing

To achieve quality concrete it should be placed with utmost care securing the homogeneity achieved during mixing and the avoidance of segregation in transporting. Research has shown that a delayed placing of concrete results in a gain in ultimate compressive strength provided the concrete can be adequately compacted. For dry mixes in hot weather delay of half to one hour is allowed whereas for wet mixes in cold weather it may be several hours. The various situations in which concrete is placed are discussed below.

### *Foundations*

Concrete foundations for walls and columns are provided below the ground surface. Before placing the concrete in the foundation all the loose earth, roots of trees etc., are removed. If the surface is found dry it is made wet so that earth does not absorb water from concrete. On the other hand if the foundation bed is wet the water and mud is removed and cement is sprinkled before placing concrete.

### *Beams, Columns, and Slabs*

Before placing the concrete, the forms must be examined for correct alignment. They should be adequately rigid to withstand the weight of concrete and construction loads without undue deformation. Forms should be light enough to avoid any loss of mortar resulting in honeycombed concrete. The insides of the forms should be cleaned and oiled before use to avoid any sticking of concrete with the forms and making their stripping off difficult.

Concrete should not be dropped but placed in position to prevent segregation. It should be dropped vertically from as small height as possible. It should be placed at one point in the formwork and allowed to flow side ways to take care of honeycombing.

Laitance formation should be avoided. It can be checked by restricting thickness of layer of concrete by 150–300 mm for R.C.C work. Laitance, however, if formed must be removed before placing the next layer of concrete. Several such layers form a lift, provided they follow one another quickly enough to avoid cold joints. The surface of the previous lift is kept rough and all the laitance removed before placing the next lift.

The reinforcement should be checked for tightness and clean surface. The loose rust or scales if any, are removed by wire brush. Paint, oil or grease if found should be removed. The minimum cover for reinforcement should be checked before concreting.

### *Mass Concreting*

When the concrete is to be laid in mass as for raft foundation, dam, bridge, pier etc., concrete is placed in layers of 350–450 mm thickness. Several such layers placed in quick succession form a lift. Before placing the concrete in the next lift, the surface of the previous lift is cleaned thoroughly with water jets and scrubbing by wire brush. In case of dams, sand blasting is done. The laitance and loose materials are removed and cement slurry is applied. When the concrete is subjected to lateral thrust, *bond bars* or *bond stones* are provided to form a key between different layers.

### *Concreting Highways and Runways*

Concrete is laid in bays for highway, runway, or floor slabs. First the ground on which concrete is to be laid is prepared and all the loose materials and grass etc., are removed. The earth is wetted and compacted. The subgrades over which concrete is to be laid should be properly compacted and damped to avoid any loss of moisture from concrete. Concrete is then laid in alternate bays. This allows the concrete to undergo sufficient shrinkage and cracks do not develop afterwards. Concrete is not placed in heap at one place and then dragged, instead it is placed in uniform thickness.

### *Concreting Underwater*

Concrete may be placed underwater with the help of bottom dump buckets. The concrete is taken through the water in water- tight bucket. On reaching the place of deposition the bottom of the bucket is made to open and the concrete is dumped. In this process certain amount of cement is washed away causing a reduction in strength of concrete. Another way of concreting underwater is by filling cement bag with dry or semi-dry mix of cement and aggregates and lowering them to the place of deposition. The draw back of this method is that the concrete will be full of voids interspersed with purticible gunny bags.

The best method of placing concrete underwater is by the use of *termie* pipe. The concrete is poured into it through funnel. The bottom end of the pipe is closed with a thick ploythene sheet, with the bottom end of the pipe at the place of deposition. The concrete (slump 150–200 mm) is poured into funnel till the whole pipe is filled with concrete. The pipe is slightly lifted and given a jerk, the polythene sheet cover falls and concrete discharged. It should be ensured that the end of pipe remains inside the concrete so that water does not enter the pipe. The pipe is again filled with concrete through funnel and the process repeated till the concrete level comes above the water level. No compaction is required for underwater concrete as it gets compacted by the hydrostatic pressure of water. Concrete can also be placed underwater with the help of pipes and pumps.

## Compaction

After concrete is placed at the desired location, the next step in the process of concrete production is its compaction. Compaction consolidates fresh concrete within the moulds or frameworks and around embedded parts and reinforcement steel. Considerable quantity of air is entrapped in concrete during its production and there is possible partial segregation also. Both of these adversely affect the quality of concrete. Compaction of the concrete is the process to get rid of the entrapped air and voids, elimination of segregation occurred and to form a homogeneous dense mass. It has been found that 5 per cent voids in hardened concrete reduce the strength by over 30 per cent and 10 per cent voids reduce the strength by over 50 per cent. Therefore, the density and consequently the strength and durability of concrete largely depend upon the degree of compaction. For maximum strength driest possible concrete should be compacted 100 per cent.

The voids increase the permeability of concrete. Loss of impermeability creates easy passage of moisture, oxygen, chlorides, and other aggressive chemicals into the concrete. This causes rusting of steel and spalling (disintegration) of concrete i.e., loss of durability. Easy entry of sulphates from the environment causes expansive reaction with the tricalcium aluminate ($C_3A$) present in cement. This causes disintegration of concrete and loss of durability. Entry of carbon

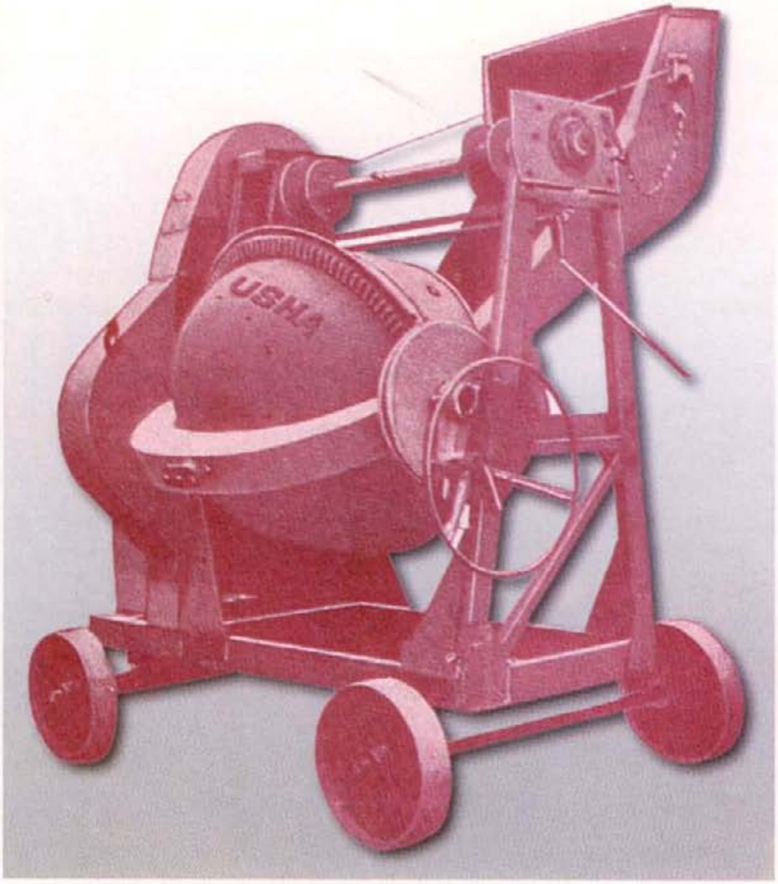

Plate 1

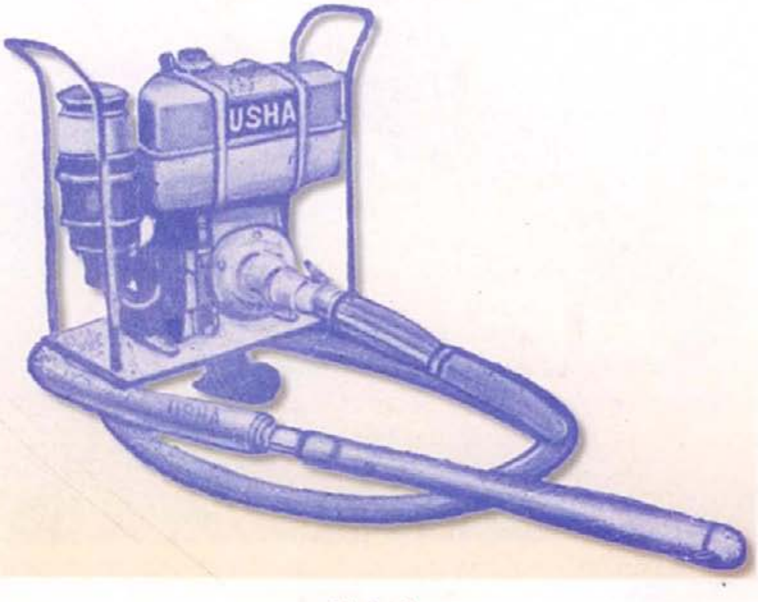

Plate 2


proceq
PEAK
1/10 N/mm²-ø50mm
ON
PEAK
DYNA
Haftprüfer
Pull-off Tester
Z16
proceq

Plate 3

dioxide causes carbonation of concrete i.e., loss of alkalinity of concrete or loss of the protective power that concrete gives to the reinforcement or other steel embedded in it. Once the carbonation depth exceeds the thickness of concrete cover to the embedded steel, steel becomes vulnerable to the attack of moisture. This expedites rusting of steel as the protective concrete cover remains no longer alkaline in nature.

Voids also reduce the contact between embedded steel and concrete. This results in loss of bond strength of reinforced concrete member and thus the member loses strength. Voids such as honeycombs and blowholes on the exposed surface produce visual blemish. Concrete surface is not good to look with all such blemishes. Concrete with smooth and perfect, surface finish not only looks good but is also stronger and more durable.

Compaction is achieved by imparting external work over the concrete to overcome the internal friction between the particles forming the concrete, between concrete and reinforcement and between concrete and forms and by reducing the air voids to a minimum. The compaction of concrete can be achieved by the following methods.

### *Hand Compaction*

This method of compaction is used for small and unimportant jobs. However, this method is extremely useful for thin elements such as slabs, and for members with congested reinforcements. This method can be used for mixes with any workability except for very fluid or very plastic mix. Hand compaction is achieved by rodding ramming, or tamping.

Rodding is done with the help of 16 mm diameter, 2 m long steel rod to pack the concrete between the reinforcement, sharp corners and edges. Rodding is done continuously during concreting. Ramming is permitted only for unreinforced concrete constructions. The roof and floor slabs are usually tamped for achieving compaction. The tampers are 100 × 100 mm in section and about 1 m long. Tamping bars not only compact the concrete but also level the top surface. The limitation of this method is that a large water-cement ratio is required for full compaction.

### *Compaction by Vibration*

This is the most common and widely used method of compacting concrete for any structural element. The vibrations imparted to the fresh concrete reduce the internal friction between the particles of concrete by setting the particles in motion and thus produce a dense and compact mass. On vibration, the concrete mix gets fluidized and the internal friction between the aggregate particles reduces, resulting in entrapped air to rise to the surface. On losing entrapped air the concrete gets denser. Vibrations do not affect the strength of concrete but concrete of higher strength and better quality can be made with lesser water and given cement content. Therefore, with vibrations stiff concrete with low water cement ratio can also be well compacted. For full compaction, vibration can be considered to be sufficient when the air bubbles cease to appear and sufficient mortar appears to close the surface interstices and facilitate easy finishing operation. Vibration helps entrapped air to escape first from between the coarse aggregate particles and later from the mortar. When vibration continues some more entrapped air from the mortar is driven out. However, during this second phase, concrete does not show any movement but it is in this phase that maximum entraped air is driven out and that is the time when most of the consolidation takes place. Plastic mixes need less time of vibration than harsh or dry mixes. The various types of vibrators in use are needle, formwork, table or platform, and surface vibrators.

*Needle Vibrator:* These are also knows as *immersion*, *internal*, or *poker* vibrator. Needle vibrator can be used for any type of concrete work. This consists of a steel tube, called poker, having an eccentric vibrating element inside it, a flexible shaft and a power unit. The needle diameter varies from 20 to 75 mm and its length from 250 to 900 mm. In places where the reinforcement is congested blades are used instead of needle. An average frequency of vibration used is 3,500 to 5,000 cycles per minute. The vibrator is immersed into concrete at a spacing of not more than 600 mm or 8 to 10 times the diameter of the poker. The vibrator is immersed at a place for about 30 seconds to 2 minutes. Location of the poker insertion should be staggered to ensure that every bit of concrete is compacted (Fig. 10.9). The vibrator should be allowed to penetrate the concrete vertically (inclination $\ngtr 10^\circ$) under its own weight. A needle vibrator is shown in Plate 2. For proper compaction in a heaped concrete the poker position should be changed gradually from the side of the heap and moving away from the heap all around (Fig. 10.10(a)). Poker should not be introduced in the center of the heap (Fig. 10.10(b)).

*Formwork Vibrator:* These are also known as *external* or *shutter* vibrators. These are generally used under the following circumstances:

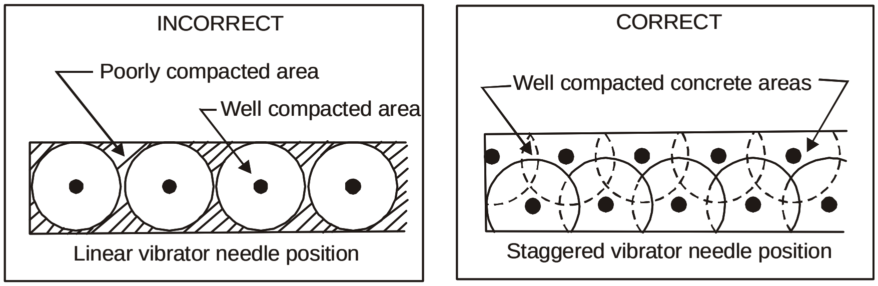

**Fig. 10.9 Method of Poker Insertion for Full Compaction**

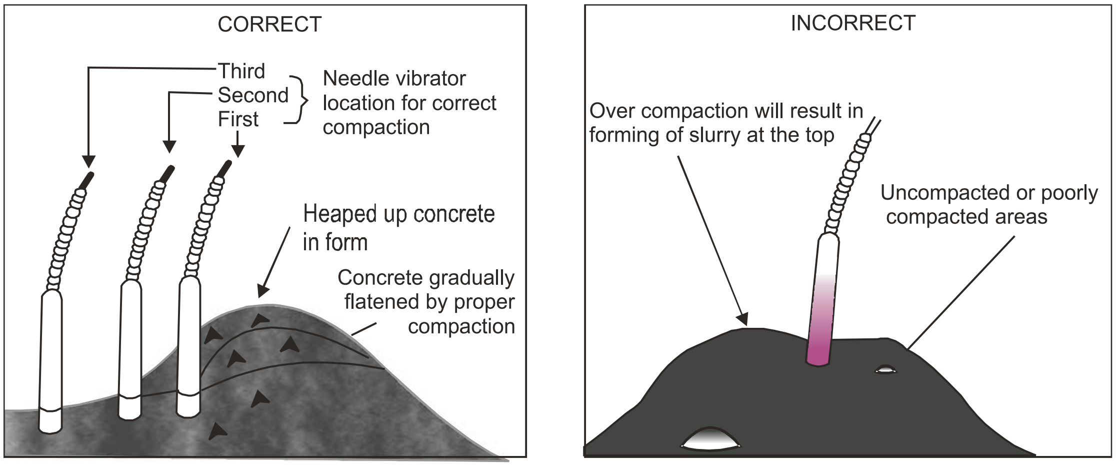

(a) (b)

**Fig. 10.10 Method of Poker Insertion Near a Heap**

1. Compaction of concrete is required to be done in a very thin or very densely congested reinforced section.
2. In addition to internal vibration, compaction is required to be done specially in the cover area where at times needle or poker vibrator is unable to do satisfactory compaction.
3. Compaction of very stiff concrete is required to be done because such concrete cannot be compacted by internal vibrators.

Formwork vibrators are used for concreting columns, thin walls and precast units. These are rigidly clamped to the formwork, causing it to vibrate and consequently transfer the vibrations to concrete. The performance of these vibrators when directly attached to formwork is not generally satisfactory. The vibrator is mounted on a steel plate, which is attached to a channel or the I-beam, which runs along the formwork touching the form stiffeners. The shuttering and the formwork have to be rigid, strong and watertight. The vibrators operate at a frequency of 3,000 to 9,000 cycles per minute. The formwork requires to be properly designed to transfer the vibrations to the concrete without itself getting displaced or opening up. These consume more power and are less efficient than the needle vibrators.

The compaction time of form vibrators is generally between 1 to 2 minutes. Form vibrators should not be used on top of the vertical formwork. Generally they should be fixed 1000 mm below the top finished level of concrete. The top layer of concrete must be vibrated by a needle vibrator. Use of form vibrator at top locations will generally cause separation of concrete from the formwork. Due to formwork being inadequately stiffened at top it results in, in and out movement causing the separation.

Form vibrators if used in addition to internal vibrators help removing entrapped air along the concrete surface giving a much superior finish. Generally, tapping with a wooden mallet on the external face of the formwork also helps remove entrapped air which generally blemishes the concrete surface inspite of adequate internal vibration.

A special case of a formwork vibrator used in laboratories and factories is vibrating table. The vibrating table consists of a rigidly built steel platform mounted on flexible springs and driven by an electric motor. The average frequency of vibration is 4000 cycles per minute. The moulds are clamped on the platform. Vibrations are stopped as soon as the concrete in the moulds develops a level smooth surface. Medium workable mixes generally require higher frequency of vibration than stiff mixes. It is observed that increasing the frequency and decreasing the amplitude as vibration progresses improves consolidation by using this type of vibrator. The vibrating tables are very efficient in compacting stiff and harsh mixes required for precast elements.

*Surface Vibrator:* These are also known as screed board vibrators. Surface vibrators are used for floor and roof slabs and pavement surfaces. These are effective only up to a thickness of 150 mm of concrete but can be used up to 250 mm. Surface vibrators cause movement of fine particles to the top and hence aid the finishing operation. The operating frequency is 4,000 cycles per minute.

### *Compaction by Spinning*

This method is also known as *centrifugation* and is used for producing circular elements such as pipes. The plastic concrete is spun into the horizontal mould at a very high speed. Water forced out of the mix during spinning flows out of the mould. The initial water cement ratio required for effective compaction is 0.35 to 0.4 which after spinning reduces to 0.3.

### Compaction by Jolting

In this method of compaction the mould containing dry concrete is subjected to jolt at a frequency of 100 to 150 jolts per minute. Jolting is a vibrating action of low frequency and high amplitude. The mould filled with concrete is raised by about 12 mm and then allowed to fall under gravity. This method is used for precast units such as hollow blocks, cavity blocks etc.

### Compaction by Rolling

In this method of compaction the soft and plastic concrete is fed continuously between rubber rollers under pressure up to 50 atmosphere. This forces out the excess water in concrete. Rolling is used to manufacture precast concrete products such as tiles.

## Curing

Cement gains strength and hardness because of the chemical action between cement and water. This chemical reaction requires moisture, favourable temperature and time referred to as the curing period. The variation of compressive strength with curing period is shown in Fig. 10.11 (a, b). Curing of freshly placed concrete is very important for optimum strength and durability. The major part of the strength in the initial period is contributed by the clinker compound $C_3S$ and partly by $C_2S$, and is completed in about three weeks. The later strength contributed by $C_2S$ is gradual and takes long time. As such sufficient water should be made available to concrete to allow it to gain full strength. *The process of keeping concrete damp for this purpose is known as curing.* The object is to prevent the loss of moisture from concrete due to evaporation or any other reason, supply additional moisture or heat and moisture to accelerate the gain of strength. Curing must be done for at least three weeks and in no case for less than ten days.

Approximately 14 litres of water is required to hydrate each bag of cement. Soon after the concrete is placed, the increase in strength is very rapid (3 to 7 days) and continues slowly thereafter for an indefinite period. Concrete moist cured for 7 days is about 50 per cent stronger

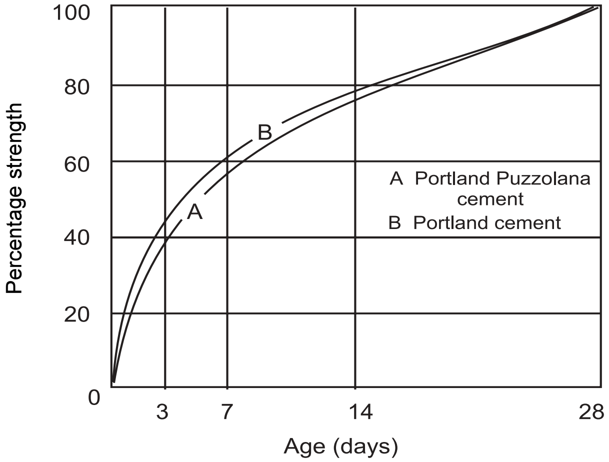

(a) Development of Strength with Age

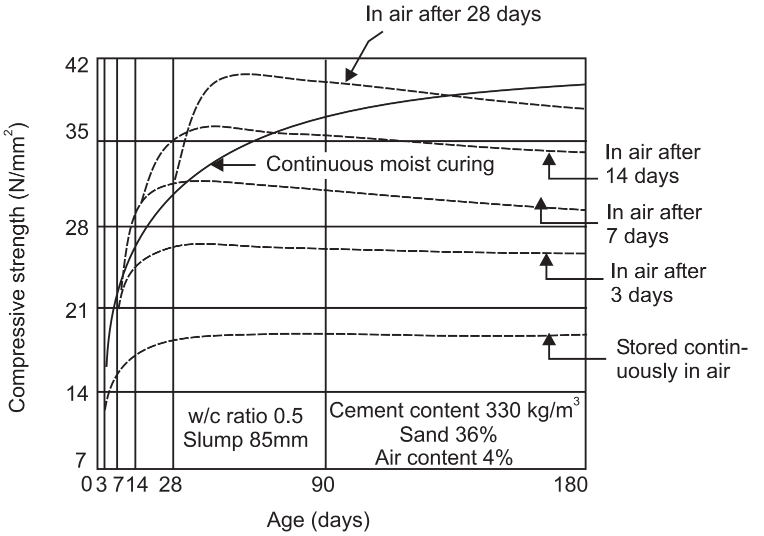

(b) Dried in Air after Preliminary Moist Curing

**Fig. 10.11 Development of Strength with Curing**

than that which is exposed to dry air for the entire period. If the concrete is kept damp for one month, the strength is about double than that of concrete exposed only to dry air.

## Methods of Curing

Concrete may be kept moist by a number of ways. The methods consist in either supplying additional moisture to concrete during early hardening period by ponding, spraying, sprinkling, etc. or by preventing loss of moisture from concrete by sealing the surface of concrete by membrane formed by curing compounds. Following are some of the prevelent methods of curing.

***Water Curing*** is done by covering the concrete surface with gunny bags and then sprinkling water over them regularly or with water proof paper. In membrane curing the surface is coated with a bitumen layer to prevent loss of moisture by evaporation. Sealing compounds such as rubber latex emulsion, resins, varnish and wax may also be used as an alternative to bitumen layer. However, the concrete here may not achieve full hydration as in moist curing.

The horizontal surfaces are kept wet by storing water over them (ponding) or by damp gunny bags, straw, etc. Ponding, may, affect the strength if the concrete is flooded too soon. When sprinkling of water is done at intervals, care must be taken that the concrete does not dry out between applications to prevent the possibility of crazing—the fine cracks that may occur in the surface of new concrete as it hardens.

***Steam Curing:*** Curing can be also accomplished by artificial heat while the concrete is maintained in moist condition. Both of these conditions can be fulfilled by the use fo steam curing. This method of curing is also known as *accelerated* curing since an increased rate of strength development can be achieved. The accelerated process of curing has many advantages in the manufacture of precast concrete products; (a) the moulds can be removed within a shorter time; (b) due to shorter period of curing, production is increased and cost reduced as also (c) storage space in the factory. The temperature can be raised by placing the concrete in steam, hot water or by passing an electric current through the concrete. In the hydration process of cement at higher temperatures, the released calcium hydroxide reacts with finely divided silica, present in the coarse and fine aggregates and forms a strong and fairly insoluble compound which results in higher strengths. Since free calcium hydroxide content is reduced, the leaching and efflorescence are minimised. The hydrating dicalcium silicates and tricalcium alluminates react together at high temperatures to form sulphate resisting compounds. Consequently autoclaved products show higher resistance to sulphate attack. The initial drying shrinkage and moisture movements are also considerably reduced. However, high-pressure steam-curing reduces the bond strength by about 50 per cent.

The concrete members are heated by steam at 93 °C either at low pressure or high pressure. In low pressure steam curing about 70 per cent of the 28 day compressive strength of concrete can be obtained in about 16-24 hours. High pressure steam curing is usually applied to precast concrete members and gives 28 day compressive strength at 24 hours. The effect of curing temperature on compressive strength is shown in Fig. 10.12. It also results in increased resistance to sulphate action and to freezing and thawing. The mixes with low water-cement ratio respond more favourably to steam curing than those with higher water/cement ratio.

An early rise in temperature at the time of setting of concrete may be detrimental because the green concrete may be too weak to resist the air pressure set up in the pores by the increased temperature. The rate of increase or decrease of temperature should not exceed 10 to 20° C per hour to avoid thermal shocks. The higher the water/cement ratio of concrete, the more adverse is the effect of an early rise in temperature. Therefore, to meet the requirement of compressive strength of concrete, the temperature and/or time required for curing can be reduced by having a lower water/cement ratio. While in identical time cycle, the higher the maximum temperature, greater is the compressive strength. The advantages of curing above 70°C are negated by dilational tendencies due to the expansion of concrete.

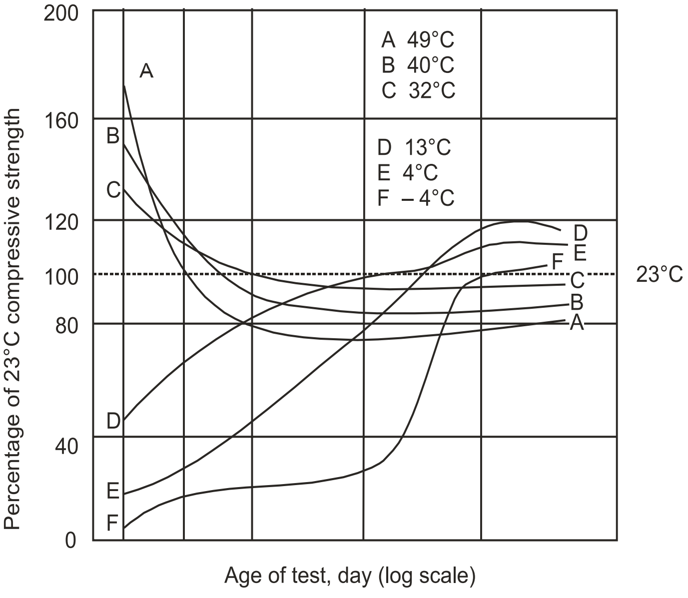

**Fig. 10.12 Influence of Curing Temperature on the Strength of Concrete**

Steam curing should be followed by water curing for a period of at least 7 days. This supplementary wet curing is found to increase the later-age strength of steam-cured concrete by 20 to 35 per cent. In most cases, steam curing is employed only for achieving 50 to 70 per cent of specified strength in a short period instead of full treatment for 2 to 3 days required to obtain specified strength.

Low pressure steam curing at atmospheric pressure can be continuous or intermittent. The maximum curing temperature is limited to 85 to 90°C. In the normal steam curing procedure, it is advisable to start the steam a few hours after casting. A delay of two to six hours, called the presteam or presetting period, depending upon the temperature of curing, is usual. The presetting period helps to achieve a 15 to 30 per cent higher 24 hour strength than that obtained when steam curing is resorted to immediately. The rate of initial temperature rise after presetting period is of the order of 10 to 20°C per hour.

In the case of normal steam-curing at atmospheric pressure, the ultimate strength of concrete may be adversely affected if the temperature is raised rapidly. This difficulty can be overcome by employing the steam at a pressure of 8 atmospheres. The process is termed high-pressure steam-curing. The increase in temperature allowed is up to 50°C in the first hour, up to 100°C in second hour and up to 185°C in the third hour. The period of treatment under full pressure depends upon the strength requirements. This period of treatment is 7 to 10 hours for hollow block products and 8 to 10 hours for slab or beam elements the period may be increased with the thickness of concrete.

***Curing by Infra Red Radiation:*** A much more rapid gain of strength can be obtained with the help of infra red radiation than even with steam curing. The rapid initial rise of temperature does not affect the ultimate strength. It is particularly suitable for the manufacture of hollow concrete products in which case the heaters are placed in the hollow spaces of the product. The normal operative temperature is 90°C.

***Electrical Curing:*** Concrete products can be cured by passing alternating current of low voltage and high amperage through electrodes in the form of plates covering the entire area of two opposite faces of concrete. Potential difference between 30 and 60 V is generally adopted. Evaporation is prevented by using an impermeable rubber membrane on the top surface of the concrete. By electrical curing, concrete can attain the normal 28-day strength in a period of 3 days. The technique is expensive.

***Chemical Curing:*** Chemical membranes can be sprayed on to cure concrete. Liquid membrane-forming curing compounds such as sodium silicate (water glass) solution retard or prevent evaporation of moisture from concrete. They form a film, fill the pores, seal the surface voids and prevent evaporation. The application should be made immediately after the concreting has been finished. If there is any delay, the concrete should be kept moist until the membrane is applied. Membrane curing compound should not be applied when there is free water on the surface, because this water will be absorbed by the concrete and the membranes broken. Nor should the compound be applied after the concrete has dried out since it will be absorbed into the surface of the concrete and a continuous membrane will not be formed. The correct time to apply the membrane is when the water sheet disappears from the surface of the finished concrete. Adequate and uniform coverage of curing compounds is essential. In most cases two applications are required. Chemical membranes are suitable not only for curing fresh concrete but also for further curing of concrete after removal of forms or after initial moist curing.

## Finishing

Concrete is basically used because of its high compressive strength. However, the finish of the ultimate product is not that pleasant. In past couple of decades efforts have been made to develop surface finishes to give a better appearance to concrete surfaces and are as follows.

***Formwork Finishes:*** Concrete takes up the shape of the form, A variety of looks can be had to the architects imagination. By careful preparation of formwork, proper mix design and good workmanship smooth surfaces can be achieved. Prefabrication units can be produced to a fine finish.

***Surface Treatments:*** The type of surface treatment depends upon the purpose for which the concrete surface is to be used. For example a pavement surface should be plane but with sufficient roughness to exhibit skid resistance. The concrete after levelling is rocked, broomed or scratched to make the surface rough.

***Applied Finishes:*** The exterior surfaces of concrete elements can be modified to give a pleasant look. The concrete surface is roughened, cleaned and wetted. Over this a cement mortar of ratio 1:3 is applied. This mortar rendering can be given a number of surface finishes such as sand facing, rough cast finish, peeble dash etc.

## 10.4 WATER-CEMENT RATIO

The water-cement ratio (w/c) is one of the major factors but not the only one influencing the strength of concrete. It is responsible mainly for the porosity of the hardened cement paste. Water-cement ratio is the water used to the quantum of cement in the mixture by weight. For proper workability the w/c ratio varies from 0.4–0.6. However, maximum strength is derived at w/c = 0.4 at which minimum capillary cavities are expected to form. It may be noted that for complete hydration of cement under controlled conditions the water requirement is about 38 per cent. When it is decreased to less than 0.4 there is improper consistency and workability of cement and honeycombed structure. However, concrete compacted by vibrator displays higher strength even up to w/c = 0.3 as shown by dotted line in Fig. 10.13. At w/c ratio more than 0.6, the increase in volume of hydrated products will not be able to occupy the space already filled with water. Hence, porosity increases and strength decreases. In arriving at the w/c ratio values it is assumed that aggregates are saturated with the surfaces in dry condition. Suitable adjustments should be made for dry aggregates. Sometimes cement-water ratio versus strength is plotted (Fig. 10.14). Being a straight line it is supposed to be a better mean to interpret the results.

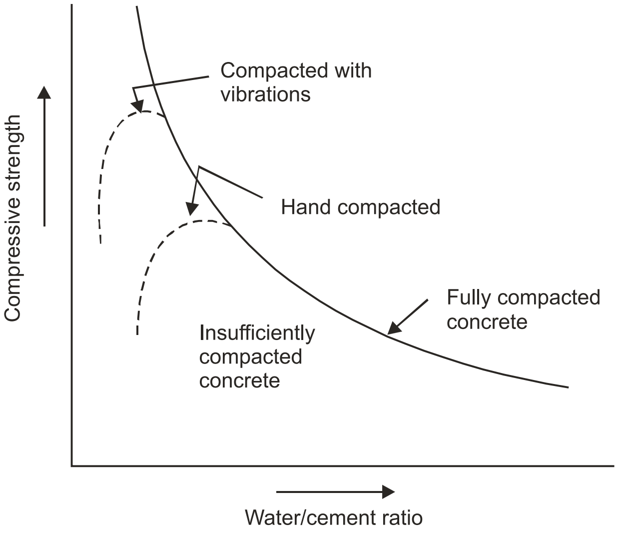

**Fig. 10.13 Relation between Strength and Water/ Cement Ratio of Concrete**

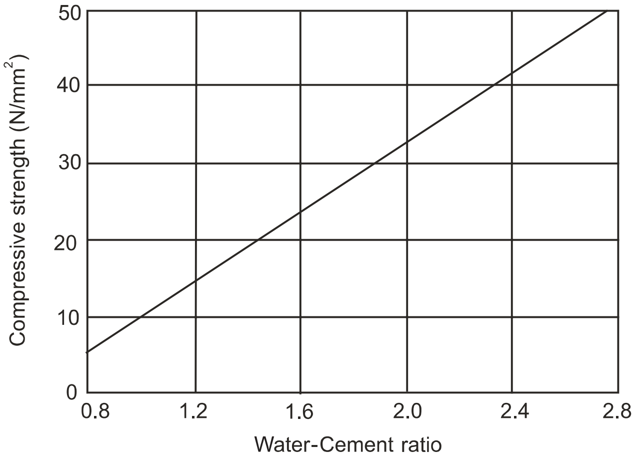

**Fig. 10.14 Relation between Strength and Water-Cement Ratio of Concrete**

In 1897 Feret proposed a rule defining strength of concrete paste in terms of volume fractions of the constituents as

$$S = K\left[\frac{c}{c+w+a}\right]^2$$

Where c = volume of cement
w = volume of water
a = volume of air
K = a constant

In this expression the volume of air is also included, which means the voids in concrete are taken into account in estimating the strength.

## Duff Abrahm's Law

Abrahm presented his classic law in 1918 as "For plastic mixtures using neat and clean aggregates the strength of concrete under specified conditions is governed by the net quantity of water mixed per bag of cement". He gave the following equation to estimate the strength of concrete.

$$S = \frac{A}{B^x}$$

where S = strength at 28 days, and constants, A = 14000 lbs/sq.in and B = 7.

According to Abrahm's law it is evident that strength of concrete depends only upon w/c ratio provided the mix is workable. Recently some modifications have been suggested by various researchers. However, the truth of statement could not be challenged. The effect of w/c ratio on the composition of cement paste is shown in Fig. 10.15.

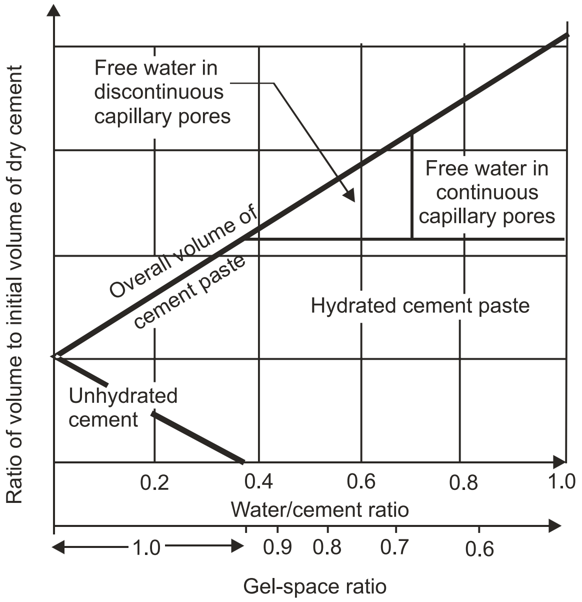

**Fig. 10.15 Composition of Portland Cement Paste after Hydration has Ceased**

## 10.5 GEL-SPACE RATIO

Since Abrahm's w/c ratio law has many limitations researchers do not agree to call it a law but they say it to be a rule. Strength at any w/c ratio is a function of following:

1. degree of hydration of cement, its physical and chemical properties.
2. temperature at which hydration takes place.
3. air content in case of air entrained concrete.
4. change in the w/c ratio.
5. formation of cracks due to bleeding and shrinkage.

Some researchers feel that the strength can be related better and more correctly to the hydration products than to the space available for the formation of these products.

Gel-space ratio is defined as the ratio of volume of hydrated cement paste to the sum of the volumes of the hydrated cement and that of the capillary pores. Power and Brownyard established a relationship between the strength and gel-space ratio. A typical curve relating gel-space ratio to the compressive strength is shown in Fig. 10.16.

$$S = 240x^3$$

Where S = strength of concrete

$x$ = gel space ratio

240 = intrinsic strength of gel in N/mm$^2$ for the type of cement and specimen used

***Note:*** **Strength calculated on the basis of gel space ratio is independent of the age, whereas of that calculated on the basis of w/c ratio depends upon the age.**

## Calculation of Gel Space Ratio

### *For Complete Hydration*

Let C = weight of cement in g, $V_c$ = specific volume of cement ml/g, and $W_0$ = volume of mixing water in ml.

Assuming 1 ml of cement on hydration produces 2.06 ml of gel.

$$\text{Volume of gel} = C \text{ x } 0.319 \text{ x } 2.06 = 0.657\ C$$

$$\text{Space available} = C \text{ x } 0.319 + W_0$$

$$\text{Gel-space ratio} = \frac{0.657\ C\mu}{0.319\ C + W_0}$$

### *For Partial Hydration*

Let $\alpha$ = fraction of cement that has hydrated.

$$\text{Volume of gel} = C \times \alpha \times 0.319 \times 2.06 = 0.657\ C\alpha$$

$$\text{Space available} = C \times 0.319 \times \alpha + W_0$$

$$\text{Gel space ratio} = \frac{0.657\ C\alpha}{0.319\ C\alpha + W_0}$$

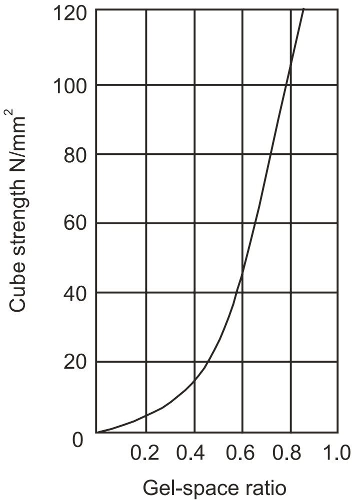

**Fig. 10.16 Relation between Compressive Strength of the Mortar and Gel-Space Ratio**

The limitation of this theory is that the theoretical strength of concrete is much more than the actual strength of concrete. In the above theory it has been assumed that the concrete is perfectly homogeneous and flawless. But the presence of flaws like cracks, voids, bleeding channels, rupture of bond due to drying shrinkage and temperature stresses reduce the strength. Griffith has done lot of work on this line and his theory is gaining popularity. His work is based on these flaws.

**Example 10.1** Calculate the gel space ratio and theoretical strength of a sample of concrete made with 500 g of cement with w/c ratio as 0.55,

1. On full hydration
2. On 75% hydration

***Solution***

$W_0 = 500 \times 0.55 = 275$ ml

*On Full Hydration*

$$\text{Gel-space ratio} = \frac{0.657\ C}{0.319\ C + W_0} = \frac{0.657 \times 500}{0.319 \times 500 + 275} = 0.756$$

Theoretical strength of concrete = $240\ (0.756)^3 = 103.72\ \text{N/mm}^2$

*On 75% Hydration*

$$\text{Gel-space ratio} = \frac{0.657\ C\alpha}{0.319\ C\alpha + W_0} = \frac{0.657 \times 500 \times 0.75}{0.319 \times 500 \times 0.75 + 275} = 0.6423$$

Theoretical strength of concrete = $240\ (0.6423)^3 = 58.4\ \text{N/mm}^2$.

## 10.6 STRENGTH OF CONCRETE

The most useful property of concrete is its compressive strength. However, it is weak in tension. Till date no relation exists between compressive, tensile, bending, and shear strengths of concrete. However, it may be mentioned here that typically the tensile and bending strength of the concrete are of the order of 10 and 15 per cent, respectively of the compressive strength. The shear is approximately 20 per cent of the uniaxial compressive strength.

### Tests for Strength of Concrete (IS: 516)

Testing plays an important role in controlling the quality of cement concrete work. Systematic testing of the raw materials, the fresh concrete and the hardened concrete is inseparable part of any quality control programme for concrete which helps to achieve higher efficiency of the materials used and greater assurance of the performance of the concrete in regards to both strength and durability. Since the strength of concrete is related to the structure of hardened cement paste, it assumes more importance. Indian Standard specifies compression test, flexure and test tensile strength test for assessing the strength of concrete.

### Compression Test

Cement, fine aggregate and coarse aggregate (up to 38 mm) to be used for making concrete are brought to room temperature (preferably 27± 3°C) before commencing the test. The ingredients are weighed in the ratio to be used in the field and are mixed by hand mixing or by machine mixing. First, the cement and sand are mixed thoroughly till a uniform colour is achieved. The coarse aggregate are then added and mixed till these are distributed uniformly throughout the mix. The water is then added and the entire batch mixed untill the concrete appears to be homogeneous and has the desired consistency.

The test specimens recommended are 150 × 150 × 150 mm cubes or cylinders of 150 mm diameter and 300 mm height. The mixed concrete is filled into the moulds in layers of 50 mm to achieve full compaction. Each layer of mix so placed is tamped with bar, 16 mm in diameter and 600 mm long, 35 times or with a vibrator. The test specimens are stored at a temperature of 27± 3°C and at 90 per cent humidity for 24 ±½ hour from the time of addition of water to the dry ingredients. After this period the specimens are removed from the moulds and placed in water and kept there until taken out just prior to test. Normally, the recognized age of test of specimens is 7 and 28 days. At least three specimens, preferably from different batches, are tested at each selected age. The specimens should be tested immediately after taking out them from water with surface water wiped off.

The specimen is placed between the platens of the compression testing machine with the care that the axis of specimen is aligned with the centre of thrust of the spherically seated platen. The compression testing machine should be able to apply gradual load of 14 $\text{N/mm}^2$/ minute. Until the specimen is crushed.

$$\text{Compressive Strength} = \frac{\text{Maximum Load}}{\text{Cross-sectional Area}}$$

The average of the three values is taken as the compressive strength of concrete of the batch, provided the individual variation is not more than ± 15 per cent of the average.

***Note:*** **IS code also recommends use of cubes of size 100 × 100 × 100 mm provided the aggregate size does not exceed 19 mm.**

## Flexure Test

The flexural tensile strength test is performed to estimate the tensile load at which concrete may crack. This is an indirect test for assessing the tensile strength of concrete. The test consists in determining the tensile strength at failure or the modulus of rupture. The ingredients of concrete are mixed as explained in the compression strength test. The concrete is filled in the mould of size 150 × 150 × 700 mm and compacted with the tamping bar weighing 2 kg, 400 mm long and with a ramming face 25 mm square. The specimen to be tested is placed in the testing machine on two 38 mm diameter rollers with a c/c distance of 600 mm. The load is applied through two similar rollers mounted at the third points, i.e., spaced at 200 mm c/c. The specimen are stored in water at a temperature of 27± 3°C for 48 hours before testing and are tested in wet condition. The load is applied without shock and increasing continuously at a rate of 0.7 $N/mm^2$/minute until the specimen fails.

$$\text{Modulus of rupture} = \frac{p\ell}{bd^2}\ (a>200\text{ mm})$$

$$\text{or,} \quad = \frac{3pa}{bd^2}\ (280\text{ mm}<a>170\text{ mm})$$

where, a is the distance between the line of fracture and the nearest support, b and d are width and depth of specimen, $\ell$ is the length of the span on which the specimen is supported, and p is the maximum load applied to the specimen.

***Notes:*** **(I)** ***IS*** **code also recommends use of specimens of size 100 × 100 × 500 mm provided the largest nominal size of aggregate size does not exceed 19 mm.**

**(II) Concrete made with crushed rock aggregate tends to have a higher transverse strength than concrete of the same compressive strength made with sand and gravel; thus if a concrete is required for its transverses strength, economical mix may be possible if crushed rock aggregate is used.**

***Split Tensile Strength Test (IS: 5816):*** Some of the other methods to estimate the tensile strength of concrete are briquette test (direct method) and split tensile strength test (indirect method). Direct methods may not reflect the correct tensile strength because of the practical difficulties involved (e.g., application of uniaxial tensile load) in the test. This has lead to the development of a number of indirect methods to determine tensile strength of which splitting tests are most common. The test consists in applying a compressive force to the concrete specimen in a way that the specimen fails due to induced tensile stresses in the specimen.

The specimen is made of cylindrical shape with the diameter not less than four times the maximum size of coarse aggregate and not less than 150 mm. The length of cylinder varies from one to two diameters. Normally the test cylinder is 150 mm diameter and 300 mm long. The test consists of applying compressive line loads along the opposite generators of the concrete cylinder placed with its axis horizontal between the platens as shown in Fig. 10.17. The load is applied at a rate so as to produce a tensile splitting stress of about 2.0 N / mm$^2$/ minute until the resistance of the specimen to the increasing load breaks down and no greater load can be sustained. The specimen fails finally by splitting along the loaded diameter. The maximum load applied is recorded. The splitting tensile strength is given by

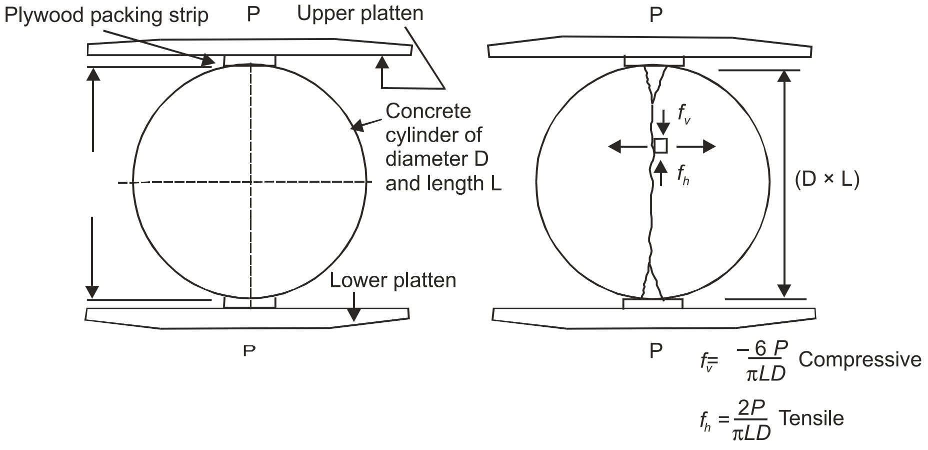

**Fig. 10.17 Loading Arrangement of Split Tensile Strength Test**

$$T = \frac{2p}{\pi DL} = \frac{0.637\ P}{DL}$$

Where P = maximum load in N applied to the specimen
D = diameter of specimen in mm
L = length of the specimen in mm

The relationship between compressive strength and split tensile strength, and flexural strength and split tensile strength are shown in Figs. 10.18 and 10.19, respectively.

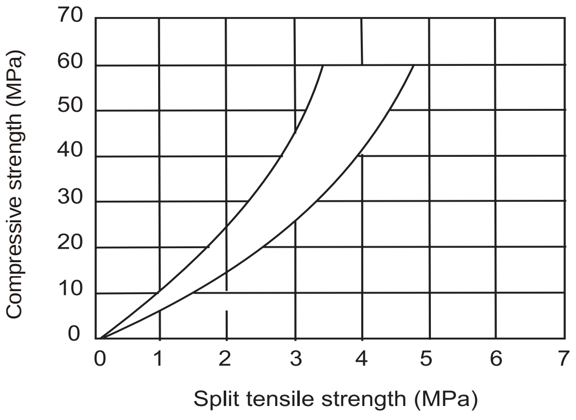

**Fig. 10.18 Relationship between Compressive Strength and Split Tensile Strength**

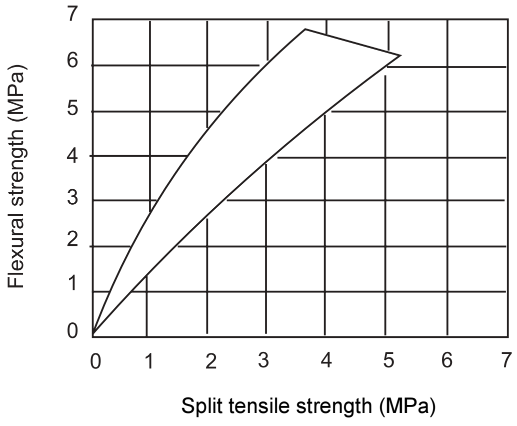

**Fig. 10.19 Relationship between Flexural Strength and Split Tensile Strength**

## Factors Influencing Strength of Concrete

Factors affecting the strength of concrete can be broadly grouped into those depending upon the testing methods and the others independent of the testing methods. Factors depending on testing methods are size of test specimen, size of specimen relative to maximum size of aggregate, moisture condition of specimen, rate of loading adopted, and type of testing machine used; and those independent of testing method are type of cement and age of cement, type and size of aggregates, degree of compaction, water-cement ratio, aggregate-cement ratio, air-voids, curing method and curing temperature, and type of stress situation that may exist (uniaxial, biaxial and triaxial).

***Size of Test Specimen:*** The form of specimen which is most commonly adopted is the cube. The concrete cubes of side 150 mm, cured for 28 days are tested in the moist saturated condition in compression. For brittle materials such as concrete which rupture on planes inclined more than 45° with the horizontal, the cube is not suitable; since the strength is increased by frictional restraint acting at the surfaces under pressure. Frictional restraint from the platens opposes the lateral expansion of the specimen, and subjects its ends to inward compressive forces. These diminish with distance from the ends, but a cube is so short that their effect extends throughout its volume. A cube is therefore tested under nonuniform triaxial compression. Prisms or cylinders with a height equal to twice the least lateral dimension are more suitable for such materials. End effects have less influence in these specimens, and it is generally agreed that the cylinder strength of concrete is a good estimate of the monoaxial compressive strength. A cube of concrete is expected to have a strength 15 per cent greater than a cylindrical specimen. If height to side ratio is changed the compressive strength of the prisms relative to cube strength changes and is given in Table 10.4. Beyond a height to side ratio of 4 it stabilises. The effect of height to lateral dimension ratio of specimen on compressive strength is shown in Fig. 10.20.

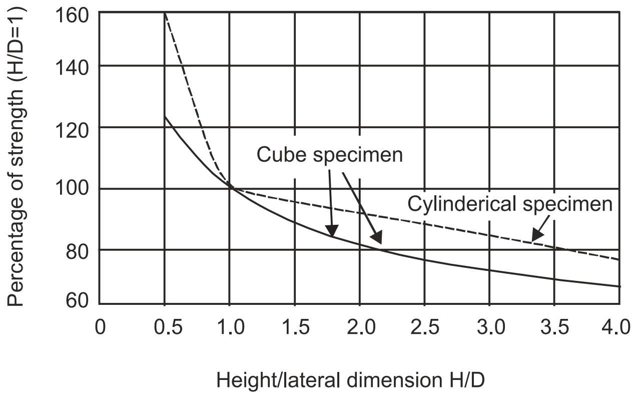

**Fig. 10.20 Influence of Ratio of Height to Lateral Dimension on the Compressive Strength**

**Table 10.4 Relative Strength of Prisms with Different Height to Depth Ratio**

| Height/side ratio | 0.5 | 1.0 | 2.0 | 3.0 | 4.0 | 5.5 |
|---|---|---|---|---|---|---|
| Relative Strength | 1.5 | 1.0 | 0.8 | 0.72 | 0.68 | 0.6 |

If size of cube is decreased the compressive strength tends to increase (Table 10.5), whereas modulus of elasticity decreases.

**Table 10.5 Relative Strength of Concrete from Cubes of Different Sizes**

| Cub size (mm) | 100 | 150 | 200 | 300 |
|---|---|---|---|---|
| Relative strength to 150 mm cubes | 1.05 | 1.0 | 0.95 | 0.87 |

***Type of Stress Situations that may Exist:*** Concrete is supposed to be tested for uniaxial compression with the line of action of load on a cube specimen at right angles to the axis of cube about which it is cast. However, cube specimens of concrete tested are under nonuniform triaxial compression. Aslo, in actual structure, the concrete at any point is in a complex stress condition and not in a uniaxial compression which forms a ground for the recommendation of cube specimen. Concrete under triaxial state offers more resistance and fails only after considerable deformations giving higher crushing strength than the actual, which justifies uniaxial compression testing and the use of cylindrical specimen.

***Size of Specimen Relative to Maximum Size of Aggregate:*** The test specimen, as regards the size and shape, is different in different countries. Generally 150 mm cubes are specified irrespective of size of aggregate. However, for aggregate less than 19 mm in size 100 mm cube is also allowed.

***Moisture Condition of Specimen:*** Strength of concrete depends upon moisture content at the time of testing. The dry cubes may have drying shrinkage and bond failure leading to smaller strength. The moisture content in concrete provides lubrication effect and reduces the strength. Due to dilation of the cement gel by the absorbed water the force of cohesion between the cement particles is decreased. Probably the decrease in strength on account of this reduction is more than that of the loss of strength due to rupture of gel bond and the dry cubes give higher strength. Also, the specimen should be tested immediately after taking it out of curing tank to give uniformity to results as compared to testing of samples which may have dried to different degrees.

Strength of dry sample = (1.1 to 1.2) × strength of saturated sample

***Air Voids:*** These are formed because of the evaporation of the water used in making concrete and by entrained air. If the water used is more than the optimum water required for maximum strength the concrete becomes permeable and susceptible to deterioration. The reduction in strength with an increase in percentage air voids is shown in Fig. 10.21.

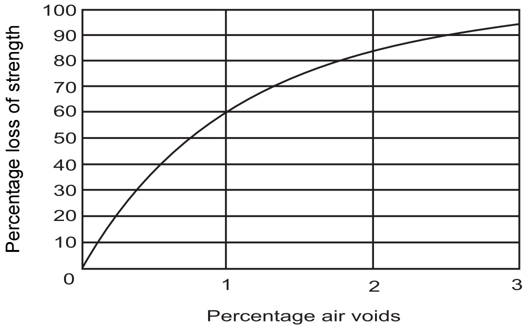

**Fig. 10.21 Loss of Strength with the Percentage of Air-Voids**

***Rate of Loading:*** Strength of concrete increases with the increase in rate of loading. The influence of rate of application of load on the compressive strength of concrete is shown in Fig. 10.22. Normally in a static loading test, rate is such that the test is completed in 2 to 3 minutes. Within this range, the effect is found to be negligible. At low rates of loading there is more time for creep to occur, so that the increase of strength with rate of loading provides evidence for the theory that failure occurs at limiting values of strain, rather than stress. The relation between observed strength and rate of loading is given by

$$S = S_1\,(1 + k \log R)$$

where $S$ = strength at a given rate of loading
$R$ = rate of loading in $kg/cm^2/sec$
$S_1$ = strength of concrete at a rate of 1 $kg/cm^2/sec$
$k$ = a constant = 0.08 for 28 day test

The rate of loading of cube specimen is 14 $N/cm^2/min$.

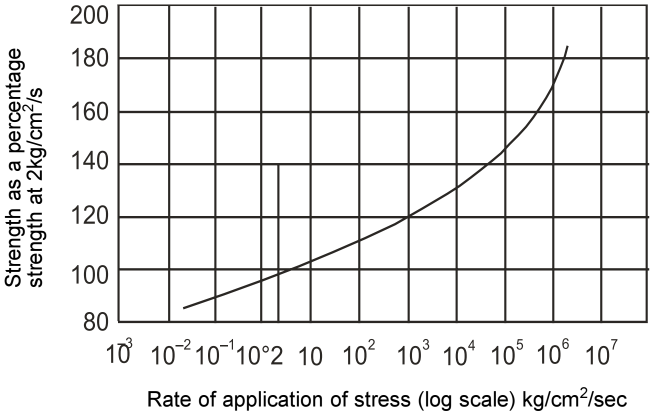

**Fig. 10.22 Influence of Rate of Application of Load on Strength of Concrete**

***Type of Tasting Machine:*** Compressive strength tests of concrete are made in various machines either of the lever-arm type or adoptions of lever presses as well as computerized. Considerable discrepancies have been found to occur between the results of compressive strength test made with different types of machines. It may be up to even 20 per cent. It may be because of errors in centering the cubes, wear of the lower compression plate, friction in the spherical seating of the upper compression plate, and inaccurate calibration of the machine itself.

***Type and Age of Cement:*** The effect of type of cement on the rate of strength gain is shown in Fig. 10.23. With age the strength of cement reduces since it will set by absorption of moisture from the atmosphere. The effect of storage of cement under different conditions with age is shown in Fig. 10.24.

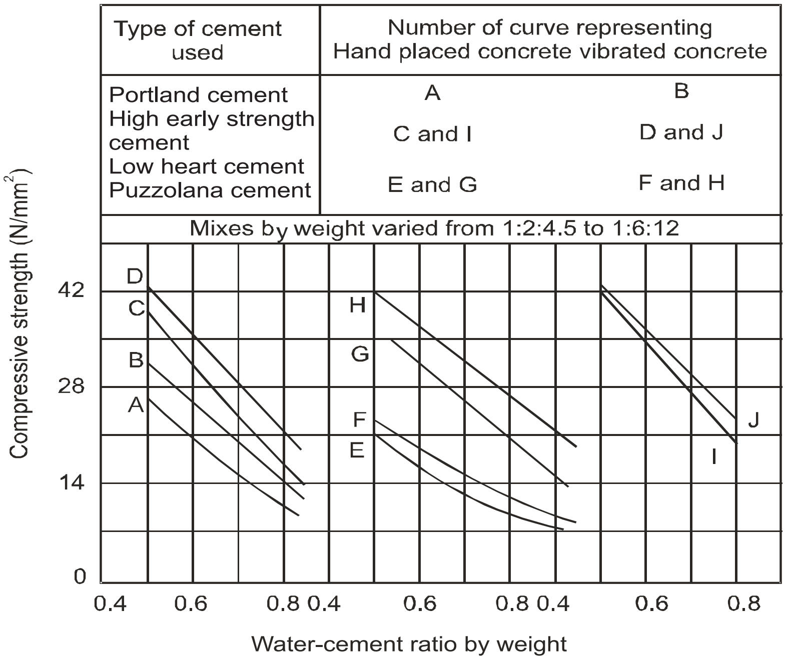

| Type of cement used | Number of curve representing Hand placed concrete | vibrated concrete |
|---|---|---|
| Portland cement | A | B |
| High early strength cement | C and I | D and J |
| Low heart cement<br>Puzzolana cement | E and G | F and H |

Fig. 10.23 Influence of Different Types of Cement on the Strength of Concrete

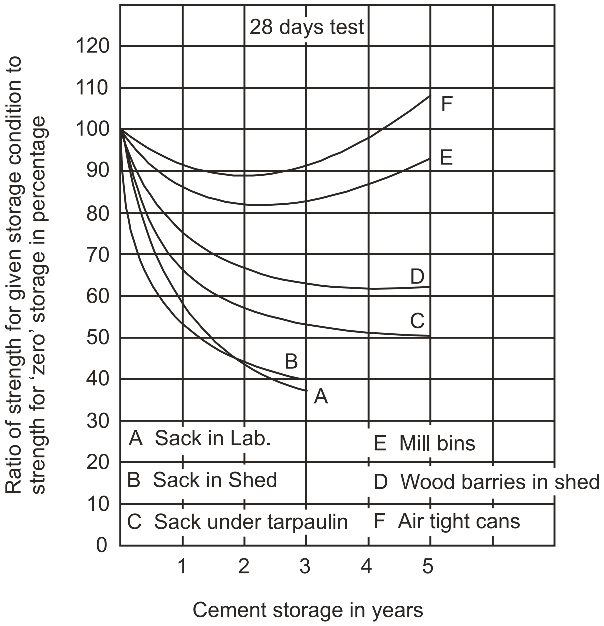

Fig. 10.24 Effect of Storage of Cement on Strength of Concrete

*Gain in Strength with Age:* Concrete gains strength with age. Initially strength developed is more. However, the ratio of gain in strength diminishes with age. It is customary to assume the 28 days strength as full strength of concrete.

| *Age (Months)* | *Age factor for low strength concrete* |
|---|---|
| *7 days* | *0.65–0.7* |
| 1 | 1.00 |
| 3 | 1.10 |
| 6 | 1.15 |
| 12 | 1.20 |

*Strength at Early Ages:* 28 day strength is known as characteristic strength of concrete. Sometimes it is required to determine the concrete strength at 1 day or 7 day to accelerate the progress of work. Following relation may be used

$$f_{28} = k_2 (f_7)^{k_1}$$

Where $f_7$, $f_{28}$ are strengths at 7 and 28 days, respectively

$k_1 =$ 0.3–0.8 (for different cements)

$k_2 =$ 3–4 (for different curing conditions)

***Cement–Aggregate Ratio:*** Provided other factors are kept constant, cement-aggregate will greatly influence concrete strength. With an increase in cement to aggregate ratio the ultimate strength will increase to some extent as shown in Fig. 10.25.

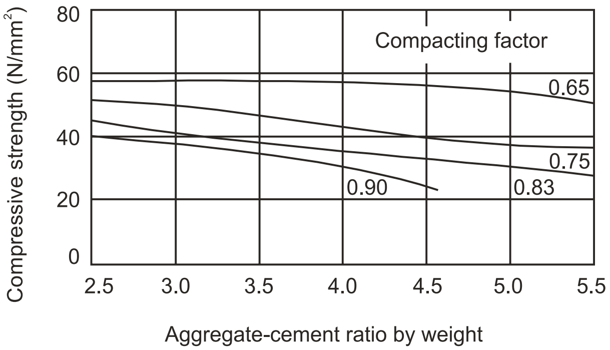

**Fig. 10.25 Influence of Aggregate/Cement Ratio on the Strength of Concrete**

***Effect of Water-Cement Ratio:*** The effect of w/c ratio on the strength of concrete has been discussed in Sec. 10.4 and is shown in Fig. 10.13. The aim is generally to use the lowest water-cement ratio which will give a concrete sufficiently plastic to place in position. Approximate relation of strength concrete with water-cement ratio is given by

$$S = k\left(\frac{c}{w + c + a}\right)^2$$

where S = strength of concrete
w = volume of water
c = volume of cement
a = volume of air

For concrete which is to be compacted by vibrator a lower water to cement ratio may be used.

***Type and Size of Aggregate:*** The extent to which an aggregate will pack down and produce a minimum void content is dependent on its particle shape. The crushed stone and gravels give higher strength. A reduction in the void content of the coarse aggregate by better packing, means that the amount of mortar can be reduced and hence sand and cement. Thus the coarse aggregate to sand ratio is increased and although the overall mix may be leaner the mortar may be richer, and by virtue of reduction in water / cement ratio which may thereby be permitted, the strength of concrete may be increased.

A rounded spherical or cubical shaped aggregate when compacted contains less voids than an irregular and flaky aggregate of the same nominal size. Therefore, the former gives higher strength.

A common belief has been that the larger the maximum size of aggregate, the denser and stronger will be the concrete. The large aggregates have lower total surface area and require lower water to cement ratio resulting in higher strength. In practice it is not so. The larger aggregates give lower surface area for development of gel bonds leading to lower strength. Also large size aggregates give heterogeneous concrete causing nonuniform distribution of load when stressed.

High strength concrete gives lower strength as compared to lean concrete if large size aggregate is used. The influence of maximum size of aggregate on compressive strength of concrete with different cement contents is shown in Fig. 10.26, and that with different water-cement ratios is shown in Fig. 10.27.

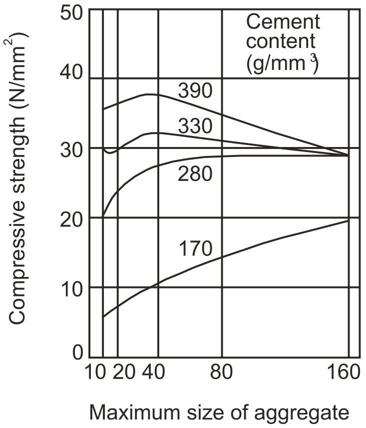

**Fig. 10.26 Influence of Maximum Size of Aggregate on 28 Day Strength of Concrete of Different Richness**

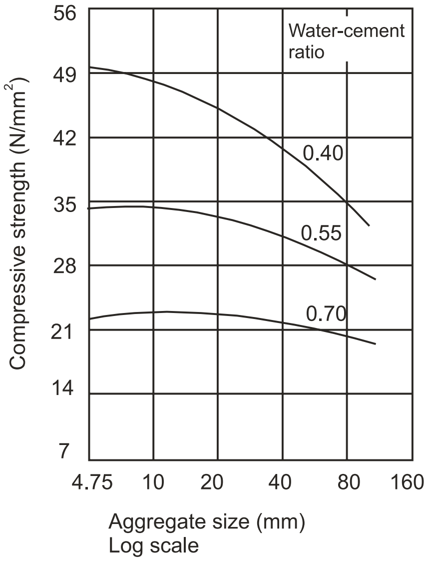

**Fig. 10.27 Influence of Maximum Size of Aggregate on the Strength of concrete**

The strength of aggregate does not affect that of concrete greatly as long as it is higher than the design grade of concrete.

***Degree of Compaction:*** Inadequate compaction leading to air void contents of 5 per cent and of 10 per cent result in a loss of strength of 30 per cent and 55 per cent, respectively. Following equation may be used to find the variation in strength.

$$S = j\left(\frac{C}{1-\rho} - n\right)$$

Where S = unit compressive strength
C = volume of cement grains in a unit volume of concrete
ρ = density of concrete
j and n = constants

The effect of degree of compaction on strength is shown in Fig. 10.28

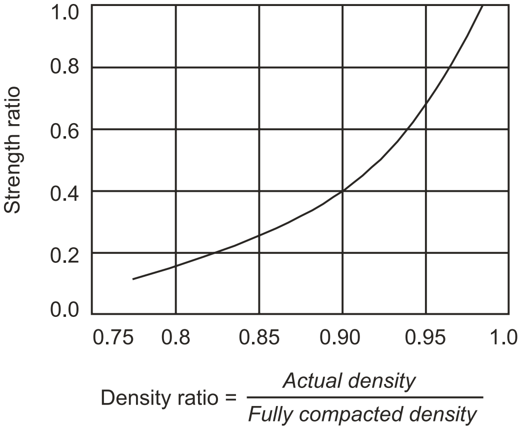

**Fig. 10.28 Effect of Compaction on the Strength of Concrete**

***Mixing Time:*** The strength of concrete increases with increase in time of mixing up to two minutes beyond which no significant improvement is observed. Figure 10.29 shows the effect of mixing time on strength of concrete.

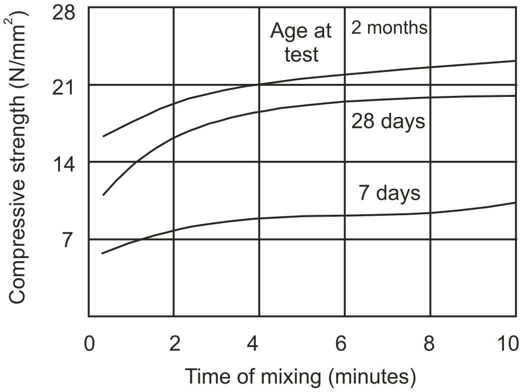

**Fig. 10.29 Effect of Mixing Time on Strength of Concrete**

***Curing Method and Curing Temperature:*** The effect of method of curing on strength has been discussed in Sec. 10.3. The higher the temperature, the greater is the rate of hardening of concrete. 10 hours curing at temperatures of about 90°C, concrete may attain 70 per cent of its 28 day strength.

## 10.7 MATURITY

The strength of concrete depends upon both the time as well as temperature during the early period of gain in strength. The time factor has already been discussed.

The maturity of concrete is defined as the summation of product of time and temperature.

Maturity = $\Sigma$ (time × temperature)

Its units are °C hr or °C days.

A sample of concrete cured at 18°C for 28 days is taken to be fully matured which is equal to

$M_{28\text{ days}} = 28 \times 24[18 - (-11)] = 19488°\text{C hr}.$

The temperature is reckoned from –11°C as origin in the computation of maturity, since hydration continues to take place up to about this temperature.

However, this value is taken as 19800°C hr since the datum used as –11°C is not the exact but the approximate value. An accurate value can be had by dividing the time into smaller intervals and noting the temperature of each and then obtaining the summation of product of time and temperature. The value obtained without this cumbersome exercise yields a sufficiently accurate value and is accepted. The relationship between maturity and strength of concrete is shown in Fig. 10.30.

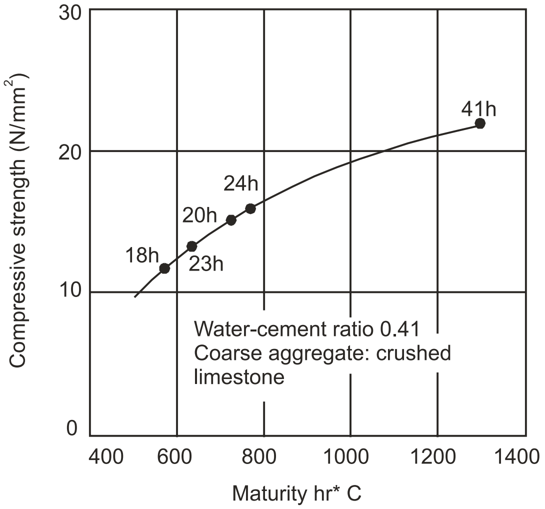

**Fig. 10.30 Relationship between Maturity and Compressive Strength**

The maturity concept is very useful for estimating the strength of concrete at any other maturity as a percentage of strength of concrete of known maturity by using the formula.

$$\text{Percentage of strength at maturity of 19800°Chr} = A + B \log_{10} \frac{\text{maturity}}{10^3}$$

Plowman has given the following values of constants A and B

| 28 day strength at 18°C<br>($M = 19800°C hr/kg/cm^2$) | Coefficients<br>A | <br>B |
|---|---|---|
| <175 | 10 | 68 |
| 175-350 | 21 | 61 |
| 350-525 | 32 | 54 |
| 525-700 | 42 | 46.5 |

**Example 10.3** The strength of a fully matured concrete sample is found to be 500 kg/cm$^2$. Find the strength of identical concrete at age of 7 days when cured at an average temperature of 20°C in day and 10°C in night.

Maturity of concrete at the age of 7 days = Σ (time × temperature)

$$= 7 \times 12 \times [20-(-11)] + [7 \times 12 \times (10-(-11)]$$

$$= 4368°\text{C hr}$$

Now A = 32 B= 54, thereby

percentage of strength of concrete at maturity of 4368°Chr

$$= A + B \log_{10} \frac{4368}{1000} = 66.5\%$$

$$\therefore \text{Strength at 7 days} = 500 \times \frac{66.5}{100} = 332.5 \text{ kg/cm}^2$$

## 10.8 WORKABILITY

In fresh concrete—concrete in the plastic state, which can be moulded into desired shape—the theoretical w/c ratio to meet the requirements of water for chemical combination with cement, and to occupy the gel-space is about 0.4 for maximum strength. The w/c ratio used at site may vary because of:

(a) the presence of free surface moisture in the aggregates, and (b) the absorption of moisture by the dry or porous aggregates.

Because of the above limitations another characteristic workability, which is again a reflection of w/c ratio, becomes important.

The theoretical w/c ratio used will not give the maximum strength because of the reasons stated above. 100 per cent compaction of concrete will give maximum strength and this can be obtained by increasing the w/c ratio. The water lubricates the concrete which can be compacted at site with the specified efforts. The lubrication required for handling concrete without segregation, for placing without loss of homogeneity, for compacting with specified effort and for easy finish are indications of workable concrete.

As per Road Research Laboratory U.K. workability is defined as the property of concrete which determines the amount of useful internal work necessary to produce full compaction. It can also be defined as the ease with which concrete can be compacted 100 per cent with regard to mode of compaction and place of deposition.

Workability is different than consistency. The latter indicates degree of fluidity or mobility. A concrete with high consistency need not be workable for a particular job. For example a concrete workable for foundation may not be workable for slab. Even for slab different workabilities will be required for compaction by hand and that by vibration. It is because the requirement of workability is less.

### Factors Affecting Workability

A workable concrete exhibits very little internal friction between the particles forming the concrete and overcomes the frictional resistance offered by the internal surface of formwork as well as that by the reinforcement contained in the concrete with just the amount of compacting efforts forthcoming. The factors helping concrete to achieve these are as follows.

***Water Content:*** The fluidity of concrete increases with water content. At site the normal practice is to increase the water content to make the concrete workable which lowers strength. In controlled concrete this cannot be resorted and even in uncontrolled concrete this should be the last choice. However, in case if more water is added due to any reason the cement content should be proportionately increased.

***Mix Proportions:*** Aggregate-cement ratio influences the workability to a large extent. The higher the ratio leaner will be the concrete. In a lean concrete, paste available for lubrication of per unit surface area of aggregates will be less and hence the workability is reduced.

***Aggregate Size:*** For big size aggregate the total surface area to be wetted is less, also less paste is required for lubricating the surface to reduce internal friction. For a given water content big size aggregate give high workability.

***Shape of Aggregates:*** For a given water content, round and cubical shape aggregates are more workable than rough, angular or flaky aggregates, because the former type of aggregates requires less cement paste for lubrication as these have less surface area and lesser voids. In case of round aggregates frictional resistance is also small so less lubrication is required. For this reason river sand and gravel provide greater workability than crushed sand and aggregates.

***Surface Texture:*** A rough surface aggregate will have more surface area than a smooth round textured aggregate. Hence, latter will be more workable for the reasons discussed above.

***Grading of Aggregates:*** Properly graded aggregates are more workable. It is so because such a mix will have least voids and thus excess cement paste will be available as lubricant. This also prevents segregation.

***Admixtures:*** Air entrained concrete is more workable. It is so because air forms bubbles, on which the aggregates slide past each other increasing the workability. Another factor is that air entraining agents are surface active and they reduce the internal friction between the aggregates.

### Measurement of Workability (IS:1199)

***Slump Test:*** This method of test specifies the procedure to be adopted, either in the laboratory or during the progress of work in the field, for determining the consistency of concrete where the nominal maximum size of the aggregate does not exceed 38 mm.

The mould used for the test specimen is shown in Fig. 10.31. The internal dimensions of the mould are bottom diameter = 200 mm, top diameter = 100 mm, and height = 300 mm.

The mould is filled in with fresh concrete in four layers, each approximately one-quarter of the height and tamped with twenty-five strokes of the rounded end of the tamping rod. The strokes are distributed in a uniform manner over the cross-section and for the second and subsequent layers should penetrate into the underlying layer. The bottom layer is tamped throughout its depth. After the top layer has been rodded, the concrete is struck off level with a trowel or the tamping rod, so that the mould is exactly filled. The mould is removed immediately by raising it slowly and carefully in a vertical direction. This allows the concrete to subside and the slump is measured immediately by determining the difference between the height of the mould and that of the highest point of the specimen being tested (Fig. 10.32). The slump measured is recorded in terms of millimetres of subsidence of the specimen.

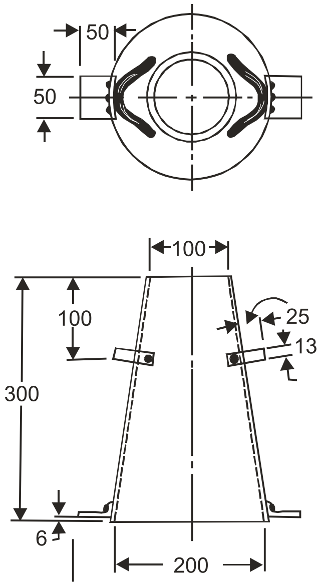

**Fig.10.31 Mould for Slump Test**

***Notes:*** **(i) Some indication of the cohesiveness and workability of the mix can be obtained, if after the slump measurement has been completed, the side of the concrete is tapped gently with the tamping rod; a well-proportioned concrete of an appreciable slump will gradually slump further, but if the mix has been badly proportioned, it is likely to fall apart.**

**(ii) The test is performed with maximum size of aggregate as 38 mm only. However, if the aggregate size is larger the concrete is wet sieved through 38 mm screen to exclude aggregate particles bigger than 38 mm.**

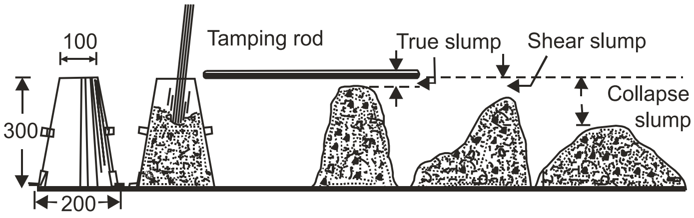

**Fig. 10.32 Measurement of Slumps**

***Compacting Factor Test:*** This test is more precise and sensitive than the slump test. It is particularly useful for concrete mixes of medium and low workabilities as are normally used when concrete is to be compacted by vibration; such dry concretes are insensitive to slump test. For concrete of very low workability of the order of 0.7 or below, the test is not suitable, because this concrete cannot be fully compacted for comparison in the manner described in the test. A diagram of the apparatus used in compacting factor test is shown in Fig. 10.33.

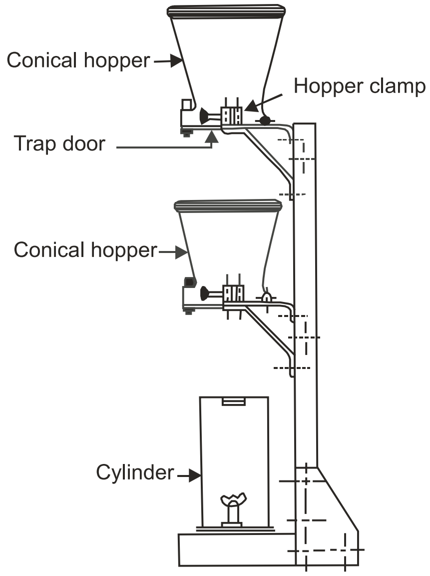

**Fig. 10.33 Compacting Factor Apparatus**

The sample of concrete to be tested is placed gently in the upper hopper. The hopper is filled level with its brim and the trap-door is opened to allow the concrete to fall into the lower hopper. Certain mixes have a tendency to stick in one or both of the hoppers. If this occurs, the concrete may be helped through by pushing the rod gently into the concrete from the top. During this process, the cylinder should be covered by the trowels. Immediately after the concrete has come to rest, the cylinder is uncovered, the trap-door of the lower hopper is opened, and the concrete is allowed to fall into the cylinder. The excess of concrete remaining above the level of the top of the cylinder is then cut-off. The weight of the concrete in the cylinder is then determined to the nearest 10 g as the weight or partially compacted concrete. The cylinder is refilled with concrete from the same sample in layers of approximately 50 mm, the layers being heavily rammed or preferably vibrated so as to obtain full compaction. The top surface of the fully compacted concrete is carefully struck off level with the top of the cylinder. Compacting factor is defined as the ratio of the weight of partially compacted concrete to the weight of fully compacted concrete. It is normally stated to the nearest second decimal place.

***Note:*** **The test is sufficiently sensitive to enable differences in workability arising from the initial process in the hydration of the cement. Each test, therefore, is carried out at a constant time interval after the mixing is completed if strictly comparable results are to be obtained. A convenient time for releasing the concrete from the upper hopper has been found to be 2 minutes after the completion of mixing.**

***Vee-Bee Consistometer Method:*** The test determines the time required for transforming, by vibration, a concrete specimen in the shape of a conical frustum into a cylinder.

The apparatus (Fig. 10.34) consists of a vibrator table resting upon elastic supports, a metal pot, a sheet metal cone, open at both ends, and a standard iron rod.

A slump test as described earlier is performed in the cylindrical pot of the consistometer. The glass disc attached to the swivel arm is moved and placed just on the top of the slump cone in the pot and before the cone is lifted up, the position of the concrete cone is noted by adjusting the glass disc attached to the swivel arm. The cone is then lifted up and the slump noted on the graduated rod by lowering the glass disc on top of the concrete cone. The electrical vibrator is switched on and the concrete is allowed to spread out in the pot. The vibration is continued until the whole concrete surface uniformly adheres to the glass disc and the time taken for this to be attained is noted with a stop watch. The consistency of the concrete is expressed in VB degree which is equal to the recorded time in seconds. The required slump is obtained on the basis of the consistency scale given in Table 10.6. The curve in Fig. 10.35 indicates the relationship between slump in mm and Vee-Bee degrees covered by the consistency scale in seconds and are given in Table 10.6.

**Table 10.6 Values of Workability for Different Placing Conditions**

| *Degree of Workability* | *Consistency* | *Slump (mm)* | *Compacting factor* | *Vee-Bee degree (sec)* | *Characteristics* | *Uses* |
|---|---|---|---|---|---|---|
| Extremely low | Moist earth | 0 | 0.65–0.7 | >20 | Particles of coarse aggregate in the concrete are adhesive, but concrete does not clot, risk of segregation. | Precast paving slabs |
| Very low | Very dry | 0–25 | 0.7–0.8 | 12–20 | Concrete has the consistency of very stiff porridge, forms a stiff mound when dumped, and barely tends to shake or roll itself to form an almost horizontal surface when conveyed for a long time in, say, a wheel-barrow. | Roads (power vibrator) |
| Low | Dry | 25–50 | 0.8–0.85 | 6–12 | Concrete has the consistency of stiff porridge, forms a mound when dumped, and shakes or rolls itself to form a horizontal surface when conveyed for a long time in, say, a wheel-barrow. | Mass concereting, light reinforced section, roads (hand vibrator) |
| Medium | Plastic | 50–100 | 0.85–0.95 | 3–6 | Concrete can be shaped into a ball between the palms of the hands, and adheres to the skin. | Flat slabs, heavily reinforced section, RCC sections (manual vibrator) |
| High | Semi-fluid | 100–175 | 0.95–1 | 0–3 | Concrete cannot be rolled into a ball between the plams of the hands, but spreads out even though slowly and without affecting the cohesion of the constituents so that segregation does not occur. | RCC with congested reinforcement (can not be vibrated) |

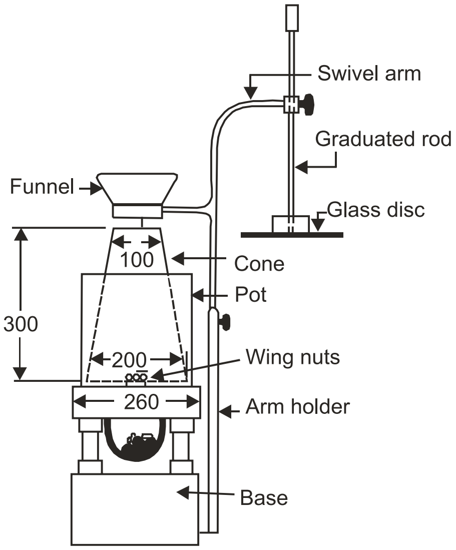

**Fig. 10.34 Vee-Bee Consistometer**

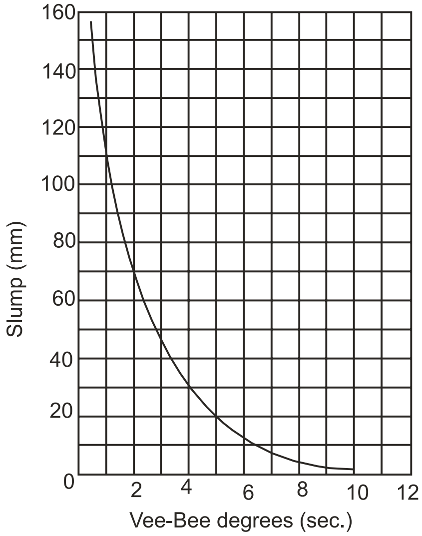

**Fig. 10.35 Ralation between Slump and Vee-Bee Degree**

## 10.9 DURABILITY

A durable concrete is one that performs satisfactorily under anticipated exposure conditions for stipulated life of the structure. The various factors affecting the durability of concrete used in normal conditions are as follows:

***Permeability*** Almost all forms of deterioration in concrete are due to ingress of water. The ways in which durability of concrete may be affected because of permeability are:

1. The chemicals in liquid form affect the concrete by penetrating it.
2. Frost action, rusting of steel, etc.

Concrete has gel pores and capillary cavities. About 1/3 of gel pores are so small that they hardly pass any water through them. The extent of capillary cavities, which depends on the w/c ratio, is the major factor contributing to permeability. The remedies are:

1. Use of puzzolanic materials.
2. Air entrainment up to 6 per cent.
3. High pressure steam curing in conjunction with silica.

***Frost Action:*** The concrete may be affected due to being permeable or by temperature below 0°C. The mechanism of attack is attributed to the expansion of absorbed water on freezing. Damage can also result from movement of water within concrete on cooling below 0°C. Ice builds up in large pores causing large expansion in local areas the others being dry cause disintegration. The conditions favouring frost attack are:

1. Horizontal surfaces open to sky absorbing more water in wet conditions and cooling quicker by radiation.
2. Low temperatures increasing the extent of migration of water resulting in freezing to greater depths in the concrete.

3. Repeated freezing and thawing.
4. Use of de-icing salts.

***Sulphate Attack:*** denotes an increase in the volume of cement paste due to the chemical action between the products of hydration of cement and solutions containing sulphates. The sulphate solutions react with $C_3A$ forming a chemical enttringite which expands and causes disruption in concrete. Sulphates occur in three forms—calcium, sodium and magnesium sulphates. Calcium has low solubility so that it does not constitute high risk. Of the remaining two magnesium sulphate has the most severe disruptive action because:

(a) the reaction product is insoluble, precipitating out of solution and leaving the way clear for further attack, and (b) magnesium sulphate reacts with the $C_3S$ hydrate in cement.

A common source of sulphate salts is the soil around the concrete foundation, from the water used in making concrete, and by using unwashed aggregates.

The remedy is to use blast furnance slag cement, sulphate resisting cement, supersulphated cement, and by reducing the permeability.

***Carbonation:*** Concrete is alkaline in nature and has an initial pH value of 12-13. So long as the steel reinforcement is in alkaline environment, its corrosion cannot start. However, carbon dioxide present in the atmosphere reacts with concrete in presence of water (the moist conditions). Infect, in the presence of moisture carbon dioxide changes to carbonic acid and attacks the concrete; $Ca(oH)_2$ present in concrete is converted to $CaCo_3$ causing reduction in pH of concrete. The concrete thus turns acidic. Once pH value in the concrete-cover drops below 10, the corrosion of steel reinforcement begins due to the reduction in the alkaline environment. Because of the corrosion of steel reinforcement, its volume increases and consequently the concrete cracks and spelling takes place.

***Mineral Oils:*** Petroleum and its products do not directly affect hardened concrete. To overcome the deteriorating affects of mineral oils on fresh concrete permeability is reduced by surface treatment by applying at least four coats of sodium silicate.

***Organic Acids:*** Acetic acid, lactic acid, and butyric acid severely attack concrete. Formic acid is corrosive to concrete.

***Vegetables and Animal Oils and Fats:*** Vegetable oils contain small amount of free fatty essence and deteriorate concrete slowly. Fish and cotton seed oils are found to be the most corrosive.

***Sugar:*** is a retarding agent and gradually corrodes concrete. The remedy is to coat the concrete surface with sodium silicate solution, tar or asphalt.

***Sewage:*** $H_2S$ gas evolved from septic sewage may promote formation of $H_2SO_4$ affecting the concrete. However, sewers running full are not affected.

***Thermal Effects on Concrete:*** Concrete is a heterogeneous material. The ingredients of concrete have dissimilar thermal coefficients which affect durability.

***Cracks:*** Cracks are inherent in concrete and cannot be completely prevented but can be minimized. Use of unsound materials, high w/c ratio, bad jointing techniques, freezing, thermal effects, etc. lead to cracks and make the concrete less durable.

## 10.10 DEFECTS

***Cracks:*** Cracks in concrete may originate from one or more of the following causes:

*Excess Water:* Water in excess of the requirement causes coarse aggregate to settle more and the water bleeds to top and evaporate leaving voids. This porous, weak concrete will be unable to bear shrinkage stresses without cracking. Concrete may also shrink down in the forms in the cases of beams and walls.

*Early Loss of Water:* results in shrinkage cracks during or soon after the finishing because of moisture absorption by dry subgrade, dry forms, dry aggregates or hot sunny weather.

*Alkali Aggregate Reaction:* arising out of incorrect selection of coarse aggregate may lead to cracks.

*Steel:* The corrosion of steel bars may cause cracks and rust stains to appear in the concrete.

*Freeze and Thaw:* The cracks because of freeze and thaw are normally observed in concrete with high w/c ratio, producing tiny crevices and voids around the aggregates, allowing the rain water to penetrate into concrete. On freezing, the ice produces tremendous force causing spalls and cracks.

***Crazing:*** of concrete products results from differences in shrinkage between the surface and the interior. The cracks rarely exceed 12 mm or so in depth, and are therefore not serious, apart from the unsightliness. The best method to overcome crazing is to be either to use an earth-moist mix, or if a plastic mix is necessary use as low a w/c ratio as is practicable and remove the cement skin to expose the aggregate. Trowelling should be avoided, as the surfaces are prone to crazing.

***Sulphate Deterioration:*** Sulphate attack is mainly caused by the soil containing sulphates or by sulphate water.

***Efflorescence:*** is the appearance of fluffy white patches on the surface of concrete members. It is caused by poorly washed aggregate, salty water used in making concrete the salts being leaching out to the surface by rain water afterwards. As the water evaporates white patches appear on the surface. This defect can be controlled to some extent by coating the surface by a water repellent.

***Segregation:*** usually implies separation of: (a) coarse aggregate from fine aggregate, (b) paste from coarse aggregate, or water from the mix and the ingredients of the fresh concrete no longer remain uniformly distributed. It can be reduced by increasing small size coarse aggregate, air entrainment, using dispersing agents and puzzolana.

The causes of segregation are dropping concrete from heights, badly designed mixes, concrete carried over long distances—pumping, belt conveyor system etc. over vibrations, and during concrete finishing extra floating and tamping. Segregation mainly occurs in dry non-sticky concrete mixes.

***Bleeding:*** defined as an autogeneous flow of mixing water within or emergence to the surface from freshly placed concrete is usually due to excessive vibrations imparted to concrete to achieve full compaction. However well concrete may have been compacted, the force of gravity tends to pull the heavy solid particles downward, the lighter water being displaced upward. This upward migration of water known as bleeding ceases either when the solid particles touch each other and cannot settle any more, or when the concrete stiffens due to cement hydration and prevents further movement. It can be reduced by grinding cement fine, or by using air entraining agents, dispersing agents, puzzolanas and by imparting vibration. It is a particular form of segregation in which some of the water comes out on the surface of concrete. Mixes which bleed excessively are those which are harsh and not sufficiently cohesive. Basically this is caused by the lack of very fine materials in mix. Obviously this is because of the coarse sand or when the sand content has been kept low. The causes of bleeding are highly wet mix, insufficient mixing, and thin sections (slabs) cast in sunny weather—being more in flaky aggregate and more in the first hours of concreting. The ill effects are reduced bond between aggregate and cement, and between cement and reinforcement.

Bleeding can be checked by the use of uniformly graded aggregates, puzzolana—by breaking the continuous water channel, or by using—entraining agents, finer cement, alkali cement, and a rich mix.

***Laitance*** defined as cement and water slurry coming on top and setting on the surface is very dangerous since the top surface will weather out fast with larger shrinkage cracks. If laitance is formed in a lift, it should be removed before next lift is placed.

## 10.11 REVIBRATION

Delayed vibration of concrete, already placed and compacted, is known as revibration. When successive top layers are vibrated, some vibration is transferred to bottom layers. It is beneficial since the quality of concrete improves as the entrapped air and water escape and also the rearrangement of particles take place.

## 10.12 PHYSICAL PROPERTIES

### Stress-Strain Curve of Concrete

The true elastic curve for concrete in compression (Fig. 10.36) can be plotted by applying and releasing load until the set at zero loads becomes constant. By subtracting the-set from the total deformation the elastic deformation for a given load is ditermined. Since mortar and concrete have no elastic limit, the modulus of elasticity for concrete must be the slope of the stress-deformation curve at zero stress.

The elastic modulus of concrete in compression, $Ec = 5000\sqrt{f_{ck}}$, where $f_{ck}$ is the characteristic strength of concrete. The elastic modulus of concrete varies from $14 \times 10^3$ to $40 \times 10^3$ N/mm$^2$. Its value increases with the density and to some extent with age.

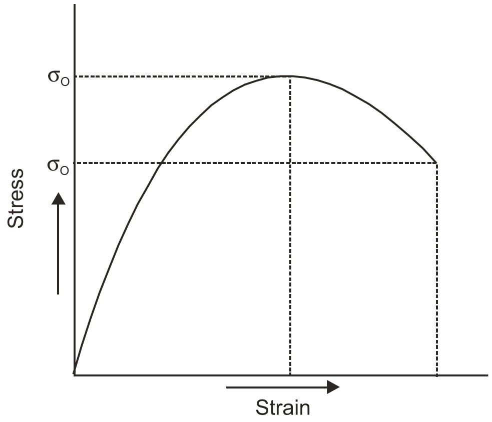

**Fig. 10.36 Stress-Strain Curve for Concrete**

***Poisson's Ratio:*** Under unit compression the unit lateral expansion of concrete is about 1/6th to 1/12th of the unit strain in the direction of the applied forces for the ordinary range of working stress. The ratio increases with the richness of the mix. The value of Poisson's ratio varies between 0.15 to 0.20 for normal concrete.

***Creep:*** The continued deformation with time under applied load is creep. It may be defined as increase of strain in concrete with time under sustained stress. This is also known *as plastic flow or time yield*. The rate of creep decrease with time and the creep strains at five years are taken as terminal values. Creep increases rapidly with the stress, loading at an early age of concrete, broken ballast, soft and porous aggregate, poorly graded and improperly compacted concrete. The deformation of hardened concrete is shown in Fig. 10.37.

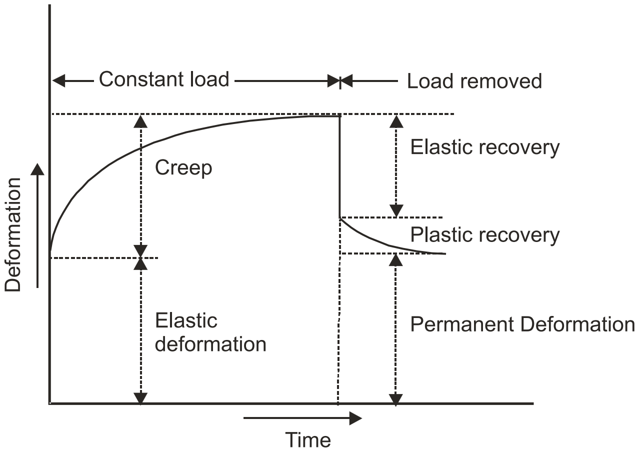

**Fig. 10.37 Deformation of Hardened Concrete**

Creep may be due to closer of internal voids, viscous flow of the cement paste and flow of water out of the cement gel. In reinforced concrete structures it is of advantage since it causes better distribution of stresses. For example in a R.C.C. column there is a reduction of stress in concrete and a corresponding increase of stress in steel due to creep. As another example creep relieves the high stressed portions of concrete in a continuous beam and increases the stress in the adjacent less stressed portion. Creep causes large deformations and deflections and is undesirable.

***Shrinkage:*** Contraction of concrete in the absence of load is known as shrinkage. It may be plastic shrinkage—shrinkage of concrete due to absorption of water by aggregates, evaporation of water and bleeding, or drying shrinkage—the shrinkage taking place after the concrete has set and hardened.

Shrinkage of concrete increases with high w/c ratio and high cement content. Shrinkage can be estimated by using Schorer's formula:

$$\varepsilon_s = 0.00125(0.90 - h)$$

where $\varepsilon_s$ = is shrinkage strain and h is relative humidity expressed as a fraction.

The rate of shrinkage decreases with time.

## 10.13 PROPORTIONING

The principle object of proportioning concrete is to achieve requisite strength with desired workability for which due attention should be paid to the selection of cement and aggregates according to the specifications. Concrete mix design is dealt in detail in chapter 11. Some of the considerations to be taken note of are:

1. The mix must be workable so that it can be placed and finished without extra effort.
2. Low cement consumption consistent with the attainment of desired properties.
3. High cement content improves strength, impermeability, density and workability.
4. With cement content, ingredients and workability remaining constant, the strength and impermeability of concrete increase with the density of mix.

## 10.14 NON-DESTRUCTIVE TESTING

The standard method of evaluating the quality of concrete in buildings or structures is to test specimens cast simultaneously for compressive, flexural and tensile strengths. The main disadvantages of such methods are the delay in obtaining results and the fact that the test specimens may not be truly representative of the concrete used in the structures. Factors affecting the strength of concrete are so many that it is almost impossible to get samples identical in quality with the entire mass of concrete and so the test samples should not be regarded as a true representation of the quality of concrete in-situ. There is no strength test, which provides the requisite information on concrete in-situ without damaging the concrete. These and other drawbacks of destructive test methods have led to the development of non-destructive methods of testing. Non-destructive methods are quick and can be performed both in laboratory and in-situ with convenience.

Although there can be no direct measurement of the strength properties of structural concrete for the simple reason that strength determination involves destructive tests, several non-destructive methods of assessment have been developed. These depend on the fact that certain physical properties of concrete can be related to strength and can be measured by non-destructive methods. Such properties include hardness, resistance to penetration by projectiles, rebound capacity and ability to transmit ultrasonic pulses and X- and $\gamma$–rays. These non-destructive methods may be categorized as penetration tests, rebound tests, pull-out techniques, dynamic tests, radioactive tests and maturity concept. Non-destructive test (NDT) can be performed on fresh (green) as well as hardened concrete with equal ease and are described as follows.

### Fresh Concrete

There are two tests, the maturity test and the ultrasonic test.

***Maturity Test:*** is based on the principle that concretes having equal maturities will have equal compressive strengths. The maturity of the in-situ concrete at the early ages can be determined with the aid of an instrument known as *maturity meter*. This is used to determine the earliest safe time for removal of formwork. The results are authentic provided the concretes have initial temperature between 15-26°C and there is no loss of moisture during the period of curing.

***Ultrasonic Test:*** Ultrasonic pulses are released from one of the transducers placed in contact with one of the surface of the freshly placed concrete. The pulse is converted into an electric signal by a second electro-acoustical transducer, and the time taken by the pulse to travel is displayed digitally in the instrument. The distance between the transducers being known, the velocity is calculated and strength corresponding to the pulse velocity can be obtained from the calibrated charts supplied by the manufacturers. At present the ultrasonic pulse velocity method is the only one of dynamic test type that shows potential concrete strength in-situ. It measures the time of travel of an ultrasonic pulse passing through the concrete. The fundamental design features of all commercially available units are very similar consisting of a pulse generator and a pulse receiver. Pulses are generated by shock exciting piezo-electric crystals, with similar crystals used in the receiver. The time taken for the pulse to pass through the concrete is measured by electronic measuring circuits.

Pulse velocity tests can be carried out on both laboratory-sized specimens as well as on completed concrete structures. Some of the factors that affect measurements are as follows:

1. There must be smooth contact with the surface under test; a coupling medium such as a thin film of oil is mandatory.
2. It is desirable for path-lengths to be at least 30 cm in order to avoid any errors introduced by heterogeneity.
3. It must be recognized that there is an increase in pulse velocity at below-freezing temperature owing to freezing of water; between 5 to 30°C pulse velocities are not temperature dependent.
4. The presence of reinforcing steel in concrete has an appreciable effect on pulse velocity. It is, therefore, desirable and often mandatory to choose pulse paths that avoid the influence of reinforcing steel or to make corrections if steel is in the pulse path.

## Hardened Concrete

***Concrete Core Test:*** Concrete cores are drilled from the structure and are tested in compression testing machine. The average equivalent cube strength of the cores is equal to at least 85% of the cube strength of the concrete specified for the corresponding age.

***Pullout Test:*** is more authentic than the concrete core test. A special shaped steel rod with one end enlarged is embedded in concrete in the form-work. After the concrete hardens the rod is pulled out and in so doing it comes out with a block of concrete. The pullout force determined by a hollow tension ram is related to the compressive strength of concrete.

*Limitations and Advantages:* Although pullout tests do not measure the interior strength of mass concrete, they do give information of the maturity and development of strength of a representative part of it. Such tests have the advantage of measuring quantitatively the strength of concrete in place. Their main disadvantage is that they have to be planned in advance and pull-out assemblies set into the formwork before the concrete is placed. The pull-out of course, creates some minor damage. However, it can be categorized as non-destructive, if a minimum pull-out force is applied that does not inhibit failure but makes certain that a minimum strength has been reached. This is information of distinct value in determining when forms can be removed safely.

***Penetration Test:*** The Windsor probe is generally considered to be the best means of testing penetration. It consists of powder-actuated gun or driver, hardened alloy probes, loaded cartridges, a depth gauge for measuring penetration of probes and other related equipment. A probe of diameter 6.5 mm and length 80 mm, is driven into the concrete by means of a precision powder charge. Depth of penetration provides an indication of the compressive strength of the concrete. Although calibration charts are provided by the manufacturer, the instrument should be calibrated for type of concrete and type and size of aggregate used.

*Limitations and Advantages:* The probe test produces quite variable results and should not be expected to give accurate values of concrete strength. It has, however, the potential for providing a quick means of checking quality and maturity of in-situ concrete. It also provides a means of assessing strength development with curing. The test is essentially non-destructive, since concrete and structural members can be tested in-situ with only minor patching of holes on exposed faces.

***Ultrasonic Test:*** The ultrasonic pulse velocity method as described for green concrete can also be used to determine the strength of hardened concrete. The flaws, quality of concrete, reinforcement, moisture content, temperature of concrete materials, etc. affect the pulse velocity and suitable adjustments should be made in evaluating the concrete strength.

*Limitations and Advantages:* The pulse velocity method is an ideal tool for establishing whether concrete is uniform. It can be used on both existing structures and those under construction. Usually, if large differences in pulse velocity are found within a structures for an apparent reason, there is strong reason to presume that defective or deteriorated concrete is present. High pulse velocity readings are generally indicative of good quality concrete. A general relation between concrete quality and pulse velocity is given in Table 10.7.

**Table10.7 Quality of Concrete and Pulse Velocity**

| *General Condition* | *Pulse Velocity m/sec* |
|---|---|
| Excellent | Above 5000 |
| Good | 4000–5000 |
| Questionable | 3000–4000 |
| Poor | 2000–3000 |
| Very poor | below 2000 |

*Limitations and Advantages:* Fairly good correlation can be obtained between cube compressive strength and pulse velocity. These relations enable the strength of structural concrete to be predicted within ± 20%, provided the types of aggregate and mix proportions are constant.

The pulse velocity method has been used to study the effects of freeze-thaw action, sulphate attack, and acidic waters. Generally, the degree of damage is related to a reduction in pulse velocity. Cracks on concrete can also be detected. Great care should be exercised, however, in using pulse velocity measurements for these purposes since it is often difficult to interpret results; sometimes the pulse does not travel through the damaged portion of the concrete.

The pulse velocity method can also be used to estimate the rate of hardening and strength development of concrete in the early stages to determine when to remove formwork. Holes have to be cut in the formwork so that transducers can be in direct contact with the concrete surface. As concrete ages, the rate of increase of pulse velocity slows down much more rapidly than the rate of development of strength, so that beyond a strength of l4 to 20 MPa accuracy in determining strength is less than ± 20%. Accuracy depends on careful calibration as well as on the use of the same concrete mix proportions and aggregate in making the test samples used for calibration as in the structure.

Ultrasonic pulse velocity tests have a great potential for concrete control, particularly for establishing uniformity and detecting cracks or defects. Its use for predicting strength is much more limited, owing to the large number at variables affecting the relation between strength and pulse velocity.

1. Impact plunger
2. Concrete surface
3. Housing compartment
4. Rider with guide rod
5. Pawl spring
6. Pushbutton
7. Hammer guide bar
8. Disk
9. Cap
10. Two-part ring
11. Rear cover
12. Compression spring
13. Pawl
14. Hammer mass
15. Retaining spring
16. Impact spring
17. Guide sleeve
18. Felt washer
19. Plexiglass window scale printed on window
20. Trip screw
21. Lock nut
22. Pin

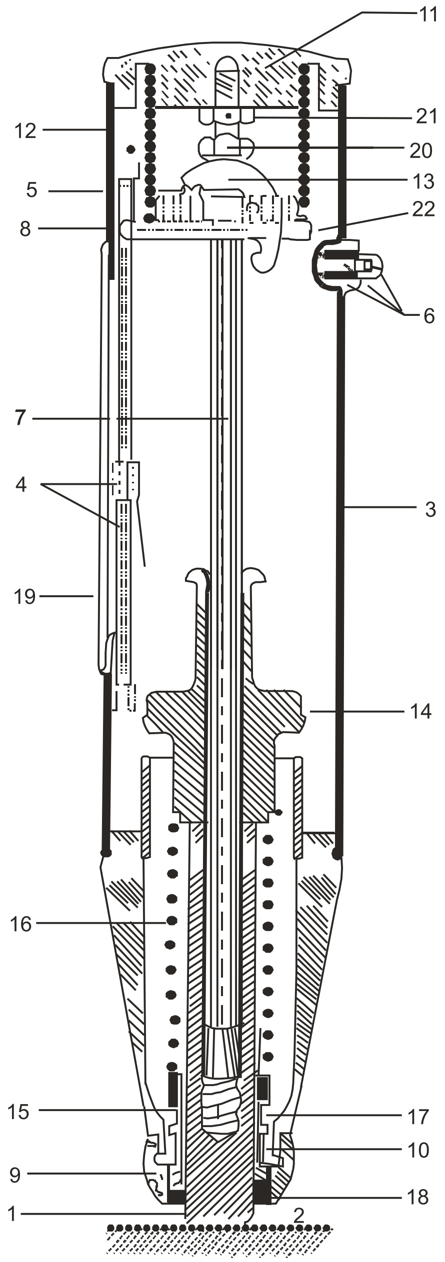

**Fig. 10.38 Concrete Test Hammer**

***Schmidt Test Hammer:*** The rebound hammer is a surface hardness tester for which an empirical correlation has been established between strength and rebound number. The only known instrument to make use of the rebound principle for concrete testing is the Schmidt hammer, which weighs about 1.8 kg and is suitable for both laboratory and field work. It consists of a spring-controlled hammer mass that slides on plunger within a tubular housing. The hammer is forced against the surface of the concrete by the spring and the distance of rebound is measured on a scale. The tests surface can be horizontal, vertical or at any angle but the instrument must be calibrated in the position. A typical rebound hammer is shown in Fig 10.38.

*Limitation and Advantages:* The Schmidt hammer provides an inexpensive, simple and quick method of obtaining an indication of concrete strength, but accuracy of ± 15 to ± 20 % is possible only for specimens cast cured and tested under condition for which calibration curves have been established. The results are affected by factors such as smoothness of surface, size and shape of specimen, moisture condition of the concrete, type of cement and coarse aggregate and extent of carbonation of surface.

***Maturity Test:*** The basic principle of concrete maturity is that increase in strength is a function of time and temperature, and that any standard of maturity in terms of strength must include both temperature and period of curing. The maturity of the concrete at any instant can be calculated by integration of temperature as a function of time if complete records of time-temperature changes are maintained. It must be emphasized, however, that in measuring maturity no property of the concrete itself is measured. If the concrete design and placing are good, the test will indicate whether the concrete has been adequately cured; it will not indicate the quality of the concrete.

***Radioactive Methods:*** Concrete absorbs X-rays and $\gamma$-rays passing through it and the degree of absorption depends on the density of concrete. These rays, while passing through concrete, are partly absorbed and partly scattered. The scattered radiation can be shielded from the measuring device and the density of concrete determined by the degree of absorption of the rays traversing a direct path of known length. Radium and radio-cobalt are used as source of rays. Radium has the advantage that its activity can be regarded as constant since it takes 1000 to 2000 years for its activity to be reduced by half. However, radio-cobalt whose activity reduces to half in just five years is preferred because it is quite cheap.

*Limitations and Advantages:* Radioactive methods of testing concrete can be used to detect the location of reinforcement, measure density and perhaps establish whether honeycombing has occurred in structural concrete units. Gamma radiography is increasingly accepted in developed countries. The equipment is quite simple and running costs are small, although the initial price can be high. Concrete up to 45 cm thick can be examined without any difficulty. The maximum thickness of concrete which $\gamma$-rays can penetrate is 90 cm and in field practically it is 60 cm only. $\gamma$-rays, produced by radio active materials, are highly penetrative and are therefore preferred. X-rays involve very high voltages and make use of very expensive equipments restricting their use in field.

## Selection of Test Method

Any of the methods discussed above may be used to assess the quality of concrete depending upon the following considerations.

1. The availability and reliability of the calibration charts.
2. The effects and acceptability of surface damage.
3. The accuracy desired.
4. Economic considerations.
5. Practical limitations such as member size and type, surface conditions, and access to test points.

### Need of Non-Destructive Testing

Information about the in-situ strength of concrete may be required for both under construction as well as existing concrete structures. For new concrete structures under construction, N.D.T. may be required under following circumstances:

1. Non-compliance of the material supplied in terms of works specimen test results or other specified requirements.
2. Uncertainties concerning the level of workmanship involved in construction operations affecting the hardened properties of the in-situ concrete.
3. Quality control of construction.
4. Monitoring of strength development in relation to formwork removal, curing, prestressing, load application or similar purposes.

Existing concrete structure require an examination under the following circumstances:

1. Deterioration of the concrete due to factors such a external or internal chemical attack, fire explosion and other environmental effects.
2. To make assessment of the load carrying capacity of an existing structure for change of ownership or insurance purpose or in relation to a proposed change of use or alteration.

### Advantages of Non-destructive Testing

Non-destructive methods have following distinct advantages over the prevalent destructive methods of testing.

1. The measurement can be done on concrete in-situ and thus representative samples are not required. In destructive method of testing the change in quality of concrete has to be studied on a long-term basis with respect to curing or deterioration due to certain causes. A large number of specimens are required which could be tested to destruction, at various ages. Since it cannot be guaranteed that all specimens are of the same quality, the results obtained may not be very reliable.
2. Non-destructive testing makes its possible to study the variation in quality of concrete with time and external influences.
3. In N.D.T. method the concrete is not loaded to destruction. Its quality is judged by measuring certain of its physical properties, which are related to its quality.
4. In N.D.T. there is no wastage of material as in destructive methods of testing.

## 10.15 RHEOLOGY

Rheology is the science of flow and deformation of matter and describes the interrelation between force, deformation and time. The term comes from Greek word *rheos* meaning to flow.

Rheology is applicable to all materials, from gases to solids. The rheological principles and techniques as applied to concrete include the deformation of hardened concrete, handling and placing of freshly mixed concrete and the behaviour of its constituent parts, namely, cement slurries and pastes. The rheology of fresh concrete like workability includes the parameters of stability, mobility and compactability. The mechanical behaviour of hardened cement paste, which exhibits both elastic and inelastic deformations, can be expressed in rheological terms.

### Factors Affecting Rheological Properties

1. *Mix Proportions:* A concrete mix having an axcess amount of coarse aggregate will lack sufficient mortar to fill the void system, resulting in a loss of cohesion and mobility. Such a mix is termed harsh and requires a great amount of effort to place and compact. On the other hand, an excessive amount of fine aggregate or entrained air in a concrete mixture will greatly increase the cohesion and render the concrete difficult to move.
2. *Consistency:* The consistency of concrete measured by the slump test is an indicator of the relative water content in the concrete mix. An increase in the water content or slump above that required to achieve a workable mix produces greater fluidity and decreased internal friction. Thus, a water content more than that needed will not improve the rheological properties of concrete. On the other hand, too low a slump or water content will reduce the mobility and compactibility which may pose difficulties in placement and consolidation.
3. *Hardening and stiffening:* Elevated temperature, use of rapid hardening cement, cement deficient in gypsum and use of accelerating admixtures, increase the rate of hardening which reduce the mobility of concrete.
4. *Aggregate shape and texture:* The rough and highly angular aggregate particles will result in higher percentage of voids being filled by mortar, requiring higher fine aggregate contents and correspondingly higher water content. Similarly an angular fine aggregate will increase internal friction in the concrete mixture and require higher water contents than well rounded natural sands.
5. *Aggregate grading:* A well graded aggregate gives good workability. Gap graded aggregate affects void system and workability. These effects are greater in fine aggregate.
6. *Maximum size of aggregate:* An increase in the maximum size of aggregate will reduce the fine aggregate requirement to maintain a given workability and will thereby reduce the surface area to be wetted and hence the cement content necessary for a constant water / cement ratio.
7. *Admixtures:* The admixtures which have significant effect on the rheology of concrete are plasticizers and super-plasticizers, air-entraining agents, accelerators and retarders. Lignosulphate salt based plasticizers (0.15%) reduce the water content by 10% without any detrimental effect. Super-plasticizers and plasticizers prevent the formation of flocculated structure by changing the inter-particle attraction / repulsion.

   The air-entraining agents introduce spherical air bubbles 10 to 25 mm in diameter by modifying the surface tension of the aqueous phase in the mix. The bubbles act like ball bearings to allow larger particles to flow past each other more easily thus decreasing plastic viscosity. The air-entrainment changes the rheology of concrete very significantly by increasing cohesion and reducing tendency for bleeding.

8. *Mixture adjustment:* Proper attention to the rheological properties of a mixture can effectively reduce construction and material costs. The properties of the materials used and field conditions have a great influence.

## 10.16 DETERMINATION OF CEMENT CONTENT IN HARDENED PORTLAND CEMENT CONCRETE

The sample of concrete used for analysis should be true representative of the material under consideration. Several portions weighing at least 5 kg each are taken, broken up, crushed to about 10 mm size and reduced to a fineness of approximately IS Sieve 8 in a suitable device. 100 g of this is dried at 105°C for 2 hours.

2g of each prepared sample is weighted in three 250 ml beakers. Care is taken to see that the sample does not adheres to the beakers or lumps formed. 100 ml of 3.3N Hydrochloric acid is added slowly and stirred. After the evolution of carbon dioxide has ceased and the reaction is apparently completed, it is heated gently for few minutes and contents of beaker are allowed to settle down. It is then decanted through an ignited and weighted gooch crucible which contains a mat of short asbestos shreds, practically insoluble in hydrochloric acid. It is then filtered through Whatman filter paper No. 42. Once the filtration has begun, care is taken so that the mat and accumulated residue do not dry out completely untill the filtration process is completed. The session is regulated so as to maintain rapid rate of dropping during filtration. The residue retained in the beaker is washed by decantation twice with hot water. 75 ml of 1N Sodium hydroxide is added to the residue while string and heating to about 75°C. The residue is then transferred to the crucible and washed with at least 60 ml of hot water.

Now the filtration contains silica in the form of silicic acid in the true solution or in suspension in the hydrochloric acid medium. If the aggregate of the original sample are largely calcareous or dolomatic, 10 ml of hydrochloric acid having specific gravity 1.19 is added. It is then transferred to the suitable beaker with several rinsing of the suitable flask. This is evaporated to dryness with great care, heating it below 120°C for one hour, and moistening with 10 ml concentrated hydrochloric acid. It is evaporated and heated again and is taken of filtration in 75 ml of 2 N Hydrochloric acid heated to boiling. It is filtered through an ash less filter paper No. 42 and the residue is washed with 50 ml of hot 1N hydrochloric acid and then with hot water untill the washings are free from chlorides. The evaporation and filtering process is repeated to recover the small amounts of silica dissolved and these are added to the first residue.

When the aggregates used in the concrete being analyzed are available a blank test is run on these aggregates to determine their content of silica. This content of the soluble silica is then used as a correction factor and subtracted from the total soluble silica found in the concrete, the difference being due to the cement contained in the specimen.

The percentage of cement in the sample is calculated by dividing the percentage of silica found by the factor 0.214, provided the silica content of the cement is not known to be different from this value.

## 10.17 ADMIXTURES FOR CONCRETE (IS: 9103-1999)

Admixtures are the materials other than the three basic ingredients of cement concrete—cement, aggregate and water—added to the concrete mix before or during mixing to improve certain of its properties in fresh or hardened state. The properties commonly modified are rate of hydration or setting time, workability, dispersion and air entrainment.

Many admixtures affect more than one property of the concrete and although they may enhance some, they may adversely affect some others. An admixture should be employed only after an appropriate evaluation of its effects on concrete. A degree of control must also be exercised to ensure proper quantity of admixture.

### Functions

The functions of admixtures are to accelerate the initial set of concrete, i.e., to speed up the rate of development of strength at early ages, retard the initial set, increase the strength of concrete, improve workability, reduce heat of evolution, increase durability of concrete—resistance to freezing and thawing, control expansion caused by aggregate-alkali reaction, decrease capillary flow of water and to make it impermeable, increase the penetration and pumpability of concrete, reduce segregation in grouts, strengthen the bond between old and new concrete surfaces and that between steel reinforcement and concrete, inhibit corrosion of concrete, increase resistance to chemical attack, produce coloured and cellular concrete, produce concrete of fungicidal, germicidal and insecticidal properties, and produce non-skid concrete surfaces.

### Classification

Admixtures may be classified as accelerators, retarders, water proofers, workability agents, surface active agents, puzzolanas, etc.

***Accelerators:*** normally reduce the setting time, accelerate the rate of hydration of cement and consequently the rate of gain of strength. The examples of accelerators are sulphates with an exception of calcium sulphate, alkali carbonates aluminates and silicates, aluminium chloride, calcium chloride, sodium chloride, sodium and potassium hydroxides, calcium formate, formaldehyde, para formaldehyde, etc.

Some substances may act as accelerators or as retarders according to the proportion added. For example, $CaCl_2$ when added up to 2 per cent by weight of cement acts as accelerator, but on increasing the proportion, it acts as retarder and leads to flash set. Similarly, triethanolamine when added in proportion less than 0.06 per cent by weight of cement acts as an accelerator but acts as retarder if the dosage is increased. $CaCl_2$ and NaCl are very useful to permit concreting in very cold weather (–23°C). These lower the temperature at which freezing takes place, help to keep the mixture warm by accelerating the generation of heat, and increase the ability of the concrete to resist frost by speeding up the rate of gain of strength.

***Retarders:*** normally increase the setting time and thus delay the setting of cement. Since these reduce the rate of hydration, more water is available and better is the workability. Retarders increase the compressive strength under freezing and thawing. Calcium sulphate, sugar, starch, cellulose, ammonium, ferrous and ferric chlorides, sodium hexametaphosphate, lignosulphonic acid and their salts, carbohydrates, hydrocarboxylic acids and their salts are a few examples of retarders. The use of $CaSO_4$ as retarder has already been mentioned in the manufacture of cement where it prevents the flash set. An addition of 0.2 per cent sugar by mass retards the hydration of cement to such an extent that the final set may not take place even for 72 hours. It has also been found that an addition of 0.1 per cent sugar by mass of cement raises the strength of cement at 3 days and increases the 28 days strength by 30 per cent. Retarders are very important in the situations where grouting is to be done for the voids behind the concrete arch, tunnel lining, etc. These also ensure a better bond between successive lifts in concrete constructions. These are very useful, particularly in composite construction where the steel rolled-sections have to carry the load of concrete before the latter is capable of acting as a compression member.

Also, with retarders, the concrete can be mixed by using hot water or injecting steam and it has been found that 28 days strength of concrete is not affected as is the case with normal accelerated curing.

***Water Proofers:*** Cement mortar or concrete should be impervious to water under pressure and also should have sufficient resistance to absorption of water. The concrete can be made water resistant with the additives which may be water repellent type or pore filling type. But, the ultimate aim is to produce concrete impervious to water. The examples of water repellent materials such as soda and potash soaps are chemically active, whereas calcium soaps, resin, vegetable oil, fats, waxes and coal tar residue are the examples of chemically inactive materials. The examples of pore filling materials are alkaline silicates and notably silicate of soda, aluminium and zinc sulphate and aluminium and calcium chlorides.

***Finely divided workability agents:*** increase the workability by increasing the amount of paste in concrete and hence the cohesiveness. However, if used in excess, the quantity of water has to be increased which causes cracking and loss of strength. Lime, bentonite, kaolin, chalk, diatomaceous earth are a few examples of workability agents.

***Bleeding Agents:*** To check bleeding, paraffin wax at about. 0.2–0.75 per cent by mass of cement or air entrainment is used. The latter is more effective but requires high degree of control.

***Colouring Agents:*** used in concrete work are mainly raw umber (brown), ferrous oxide (black), red oxide (red), and chromium oxide (green).

***Air Entraining Agents:*** The air intentionally introduced in the cement during its manufacture or during making concrete is known as entrained air. It is different from entrapped air where the continuous channels are formed, thus increasing the permeability. In the case of entrained air, the voids formed are discontinuous and are less than 0.05 mm in diameter. Air entrainment increases workability, and resistance of concrete to weathering. The possibility of bleeding, segregation and laitance is also reduced. However, there is some loss in the strength of concrete. The air content should be from 4 to 7%, by volume, according to the maximum size of aggregate used. The air entrainment may be done by surface active agents, chemicals, or by cement dispersing agents.

*Surface Active Agents:* reduce the surface tension and are commonly known as air entraining agents. An addition of 5 per cent of air may increase the compacting factor by 0.07 and a corresponding increase of slump: 12 to 50 mm. Following are some of the examples of air entraining agents:

1. Natural wood resins and their soaps, of which vinsol resin is the best.
2. Animal or vegetable fats and oils such as tallow or olive oil and their fatty acids such as stearic acid and oleic acids and their soaps.
3. Wetting agents such as alkali salts of sulphonated or sulphated organic compounds. A well known trade material is Darex. Other trade names of this category are N. Tair, Airalon, Orvus, Teepol, Petrosan and Cheecol.

*Chemicals:* The addition of chemicals such as zinc or aluminium powder releases gases. This method is generally not adopted since it requires high control.

*Dispersing Agents:* are surface active chemicals imparting electrostatic charges on the cement particles. This causes cement particles to repel each other and thus prevent coagulation. A small amount of air is also entrained in the concrete and workability is increased. The dispersing agents reduce the strength. The most commonly used dispersing agent is calcium lignosulphonate.

***Grouting Agents*** are classified as follows:

1. Rust generating (expandite) —consisting of finely divided iron and $NH_4Cl$. Iron rusts and expands, producing non-shrink grouts.
2. Methocel—obtained from Dow chemicals.
3. Hydrogen generating (Nevander)—checks bleeding but does not expand.
4. Chemically expansive (sulphoaluminate)—Denka Tascan.

***Plasticizers:*** are organic or a combination of organic and inorganic substances, which allow a water reduction for a given workability, or give higher workability at the same water content. Plasticizers are principally surface active (surfactants). They induce a negative charge on the individual cement particles such that the fine cement particles are dispersed due to inter particle repulsion.

Fine cement particles being very small clump together and flocculate when water is added to concrete. This ionic attraction between the particles trap considerable volume of water and hence water required for workability of concrete mix is not fully utilised. Negative charges are induced on the fine cement particles causing flocs to disperse and release the entrapped water. Water reducing admixtures or plasticizers therefore help to increase the flow of the concrete mix considerably. Fig. 10.39 illustrates this disperse mechanism due to ionic repulsion.

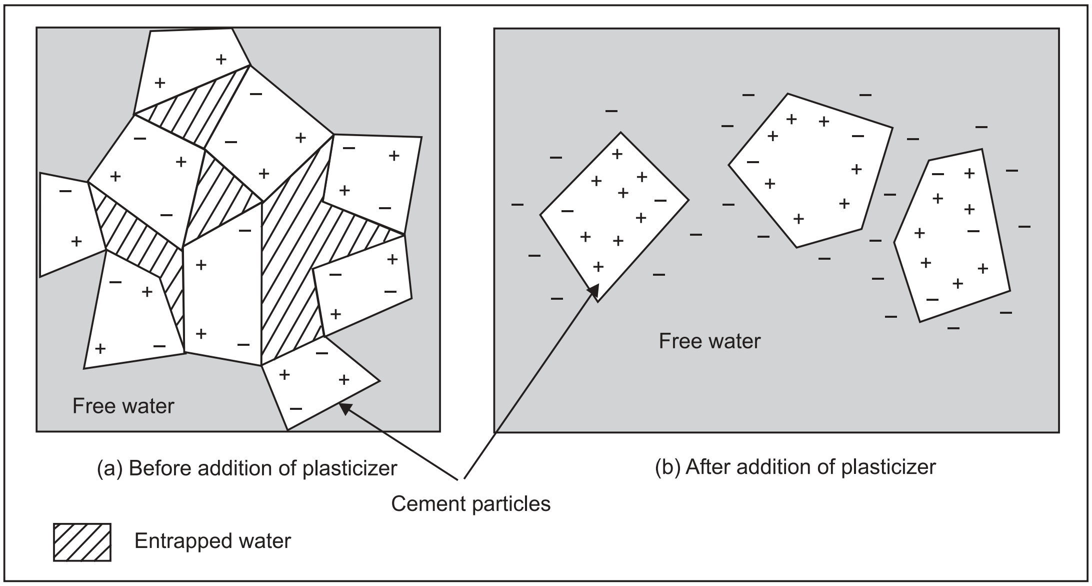

**Fig. 10.39 Disperse Mechanism of Cement Particles in Concrete before and after Addition of Plasticizers**

Essentially water reducing admixtures perform of plasticize concrete more by physical interaction than by chemical interaction. The chemical interaction is generally responsible for slump retention or retardation of concrete.

When admixtures are added, the initial hydration of aluminate and silicates is delayed since some chemicals strongly affect the formation and growth of crystals of the hydrated phases. The chemical admixture first gets absorbed on the hydrated phases containing alumina and depending on the quality of the admixture and $C_3$ A content of cement it is further absorbed on other hydrated phases of silicates. This inhibition of the surface hydration reaction of the cement particles leaves more water to fluidise the mix and thereby increase the workability of concrete and also retain the workability for a longer period. Numerous organic compounds such as lignosulphonates, hydroxy carboxylic and carboxylic acids and their salts etc. cause retardation.

***Superplasticizers:*** are hydrodynamic lubricants which impart high workability by reducing friction between the grains or by reducing the amount of water to be added. They are improved version of plasticizers interact both physically and chemically with cement particles. The mechanism of action of super plasticizers is same as that of plasticizer. Superplasticisers are anionic in nature and impart a negative charge to the cement particles, causing them to repel each other. Once the superplasticiser is added, the concrete should not be agitated as it will lead to an early loss of workability. The workability of the superplasticised concrete decreases more with time than that of the ordinary concrete. The strength, water-cement ratio and creep of concrete with the additive are same as that of concrete before the addtion of plasticizer, while shrinkage and surface absorption are reduced slightly and the resistance to thawing and freezing is improved. By addition of superplasticisers it is possible to obtain same strength with a reduced cement content. However, the durability is reduced. The water-cement ratio of the superplasticised concrete may be reduced up to 30 per cent to obtain the initial equality of workability.

In addition to enhancing workability, there are many other advantages of using superplasticisers. Since these are found not to be affected by accelerated curing, they help to release prestressing wires and early demoulding. They can be of assistance in placing concrete under water as the spreading of concrete under water is avoided. They are most advantageous when the concrete is to be pumped. They are not recommended for slabs, the upper surface of which slopes more than 3° or for extruded concrete.

The quantity of the superplasticiser is generally specified by the supplier. In the absence of such data. A dose of 1 to 6 litres per cubic metre of concrete may be used. If they are used in excess of the specified quantity, the rate of evolution of heat is increased, but the total heat of hydration is not much affected. Superplasticisers are added immediately before use.

Some of the examples of superplasticisers are sulphonated melamine formaldehyde condensates, naphthalene sulphonate formaldehyde condensates, modified lignosulphonate, and mixture of saccharates and acid amines.

***Puzzolanas*** are siliceous materials which are themselves inactive but react, in the presence of water, with lime to form compounds having cementitious properties. The examples of puzzolana are lime, fly ash, burnt clay and blast furnace slag. Puzzolanas react with free lime in cement and improve the durability of concrete, and reduce the rate of hardening of concrete, which is the principal objection to its use. These are dealt in details in Chapter 9.

***Expansion Producing Admixtures*** are used to counteract the drying shrinkage of concrete. Granulated iron and chemicals are most effective.

***Bonding Admixtures*** are used to join the old and the new concrete surfaces or between the successive concrete lifts. The examples are synthetic latex emulsions—made from natural rubber, synthetic rubber, polyvinyl chloride.

***Fungicides:*** The examples are arsenic, tin, mercury compounds, Tributyl tin acetate.

***Algicides:*** The examples are sodium pentachlorophenate. The usual dosage is 0.2 per cent by weight of cement.

**Note: Both of the fungicides and algicides are more effective in the form of paints.**

## Commercial Nemes

Some of the commercial admixtures available are:

1. *Accoproof, Natson's cement water proofer, Impermo, Sigment*—increase impermeability of concrete.
2. *Trip-L-Seal*—makes the concrete rapid hardening:
3. *Cico*—is water proofer and makes concrete rapid hardening and increases strength.
4. *Feb-Mix-Admix*—is water proofer, increases workability and bond.
5. *Metalcrete, ferrocrete, Asionate*—are surface hardeners.

## EXERCISE

1. (a) What is concrete and how is it made?
   (b) What is curing? What is its significance?
   (c) Define water-cement ratio. How does it influence concrete strength?
2. (a) What are the various types of concrete used in the construction industry?
   (b) Describe the procedure of preparing good quality concrete.
3. (a) What are the various methods used for curing? How 28 day concrete strength can be predicted in one day?
   (b) What is gel-space ratio?
   (c) Describe the factors affecting strength of concrete.
4. What is maturity concept of concrete?
5. (a) What is concrete? What are the functions played by its ingredients?
   (b) Discuss the various properties of concrete.
6. (a) What is meant by workability of concrete? How is it tested in field and in laboratory?
   (b) What are the requirements of good concrete?
   (c) How nominal mix concrete is different from design mix concrete?
7. (a) What are the factors affecting workability of concrete?
   (b) Describe the various defects in concrete. What precautions should be exercised to prevent them?
   (c) Describe the methods of testing fresh concrete.
8. Write short notes on following:
   (a) Carbonation of concrete
   (b) Split tensile strenght test
   (c) Revibration
   (d) Maturity of concrete

9. Describe briefly the following:
   (a) Vee-Bee Test
   (b) Factors affecting durability of concrete
   (c) Rheological properties of concrete
   (d) Properties of cement concrete in green and hardened state
10. Write notes on following:
   (a) Segregation (b) Bleeding
   (c) Laitance (d) Sulphate attack
11. (a) What is meant by M20 grade concrete?
   (b) Describe compacting factor test.
   (c) What is crazing?
12. What concrete mix will you recommend in the following situations:
   (a) Beams (b) Columns
   (c) Slabs (d) Foundation of a residential building
   (e) Water tanks
13. (a) Define creep. What are its advantages and disadvantages?
   (b) What is shrinkage? What factors promote shrinkage? What precautions will you take to reduce it?
14. State the value of slump and compacting factor you will recommend for following works:
   (a) Beams (b) Slabs
   (c) Foundations (d) Retaining walls
   (e) Pavements
15. (a) How is consistency different from workability?
   (b) What are the effects ‘of over compaction’ and under compaction of concrete?
   (c) How will you judge that compaction is complete?
16. (a) What are the methods of testing the properties of green concrete.
   (b) Describe the methods used to test the hardened concrete?
17. Write short notes on following:
   (a) Concrete mixers (b) Vibrators
   (c) Pumping of concrete (d) Accelerated curing
18. (a) What are the various methods of transporting concrete?
   (b) Discuss briefly the factors affecting the workability of concrete.
19. (a) What are the various methods of mixing concrete? Give their relative merits and demerits.
   (b) Discuss briefly the various methods of placing concrete. What precautions should be exercised during placing?
20. What are admixtures? Describe the effects of following admixtures on cement concrete with three examples of each
   (a) Retardees (b) Accelerators
   (c) Water proofers
21. Discuss the effect of following admixtures.
   (a) Calcium chloride (b) Sugar
   (c) Gypsum (d) Calcium lingo sulphonate
   (e) Sodium hydroxide
22. What are superplasticizers? How are these helpful in modifying the properties of concrete?

## OBJECTIVE TYPE QUESTIONS

1. The approximate ratio between the strengths of cement concrete at 7 days and 28 days is
   (a) 3/4 (b) 2/3
   (c) l/2 (d) l/3
2. The approximate ratio of strength of 15 cm × 30 cm concrete cylinder to that of 15 cm cube of the same concrete is
   (a) 1.25 (b) 1.00
   (c) 0.85 (d) 0.50
3. Tensile strength of concrete is measured by
   (a) direct tension test in the universal testing machine
   (b) applying compressive load along the diameter of the cylinder
   (c) applying third point loading on a prism
   (d) applying tensile load along the diameter of the cylinder
4. Consider the following statements:
   Higher water cement ratio in concrete results in
   1. stronger mix 2. better workable mix
   3. a weak mix 4. less bleeding
   Of these statements
   (a) 1 and 2 are correct (b) 2 and 3 are correct
   (c) 3 and 4 are correct (d) l and 4 are correct
5. Consider the following strengths of concrete:
   1. Cube strength 2. Cylinder strength
   3. Split-tensile strength 4. Modulus of rupture
   The correct sequence in increasing order of these strengths is:
   (a) 3, 4, 2, 1 (b) 3, 4, 1, 2
   (c) 4, 3, 2, 1 (d) 4, 3, l, 2
6. A splitting tensile test is performed on a cylinder of diameter 'D' and length 'L' if the ultimate load is 'P', then the splitting tensile strength of concrete is given by
   (a) $P/\pi DL$ (b) $2P/\pi DL$
   (c) $4PL/\pi D^3$ (d) $2PD/\pi L^3$
7. The compacting factor test of cement concrete determines its
   (a) strength (b) porosity
   (c) degree of compaction under loads(d) workability
8. The split tensile strength of M 15 grade concrete when expressed as a percentage of its compressive strength is
   (a) 10 to 15% (b) 15 to 20%
   (c) 20 to 25% (d) 25 to 30%
9. Consider the following statements:
   Shrinkage af concrete depends upon the
   1. relative humidity of the atmosphere
   2. passage of time
   3. applied stress
   Which of these statements is/are correct?
   (a) 1 and 2 (b) 2 and 3
   (c) 1 alone (d) 1, 2 and 3

10. For a give environment, the most significant factor that influences the total shrinkage of concrete is
    (a) cement content of mix
    (b) total amount of water added at the time of mixing
    (c) size of the member concreted
    (d) maximum size of the coarse aggregate used
11. Consider the following statements:
    The effect of air enterainment in concrete is to
    1. increase resistance to freezing and thawing
    2. improve workability
    3. decrease strength
    Which of these statements are correct?
    (a) 1 and 2 (b) 1 and 3
    (c) 1 alone (d) 1, 2 and 3
12. The optimum number of revolutions over which concrete is required to be mixed in a mixer machine is
    (a) 10 (b) 20
    (c) 50 (d) 100
13. Match List-I with List-II and select the correct answer using the codes given below the lists:

| *List-I*<br>(*Workability test*) | *List-II*<br>(*Measurements*) |
|---|---|
| A. Slump test | 1. 300 mm to 500 mm |
| B. Compacting factor | 2. 75 mm to 125 mm |
| C. Vee Bee test | 3. 0.80 to 0.98 |
| D. Flow test | 4. zero to 10 s |

Codes:

| | A | B | C | D |
|---|---|---|---|---|
| (a) | 2 | 4 | 3 | 1 |
| (b) | 1 | 3 | 4 | 2 |
| (c) | 1 | 4 | 3 | 2 |
| (d) | 2 | 3 | 4 | 1 |

14. Consider the following statements:
    Curing of concrete by steam under pressure
    1. increases the compressive strength of concrete
    2. reduces the shear strength of concrete
    3. increases the speed of chemical reaction
    Select the correct answer using the codes given below:
    (a) 1, 2 and 3 (b) 1 alone
    (c) 2 and 3 (d) 3 alone
15. The length of time for which a concrete mixture will remain plastic is usually more dependent on
    (a) the setting time of cement than on the amount of mixing water and atmospheric temperature
    (b) the atmospheric temperature than on the amount of mixing water and the setting time of cement

(c) the setting time of cement and the amount of mixing water than on atmospheric temperature
(d) the amount of mixing water used and the atmospheric temperature than on the setting time of cement

16. Which of the following is not an accelerator?
(a) $CaCl_2$
(b) $CaSO_4$
(c) NaCl
(d) Formaldehyde

17. Which of the following admixture is not a chemically inactive water proofer?
(a) Soda soaps
(b) Calcium soaps
(c) Wax
(d) Vegetable oils

18. The role of superplasticizer in a cement paste is to
(a) disperse the particles
(b) disperse the particles and to remove air bubbles
(c) disperse the particles, remove air bubbles and to retard setting
(d) retard setting

19. Consider the following statements:
The addition of surfactants in the concrete mix results in
1. increase in the water cement ratio
2. decrease in the water cement ratio
3. increase in the strength of concrete
4. decrease in the curing duration
5. increase in the density of concrete

Of these statements
(a) 1, 3 and 4 are correct just
(b) 2, 3 and 5 are correct
(c) 3, 4 and 5 are correct
(d) 1, 4 and 5 are correct

20. Match List-I (Admixtures) with List-II (Chemicals) and select correct answer using the codes given below the lists:

| *List-I* | *List-II* |
|---|---|
| A. Water reducing admixture | 1. Sulphonated melanin |
| B. Air entraining agent | 2. Calcium chloride |
| C. Super plasticiser | 3. Lignosulphonate |
| D. Accelerator | 4. Neutralized vinsol resin |

Codes:

| | A | B | C | D |
|---|---|---|---|---|
| (a) | 2 | 4 | 1 | 3 |
| (b) | 1 | 3 | 4 | 2 |
| (c) | 3 | 4 | 1 | 2 |
| (d) | 3 | 4 | 2 | 1 |

21. Ultrasonic pulse velocity method in used to determine
(a) compressive strength of concrete
(b) impact resistance of concrete
(c) tensile strength of concrete
(d) quality of concrete

22. The ratio of tensile strength to compressive strength of concrete is about
(a) 1/5
(b) 1/2
(c) 1/10
(d) 1/20

23. A concrete cylinder of size 15 mm diameter and 300 mm long is tested for split tensile strength of concrete. It failed at a load of 100 kN. The split tensile strength in N / $mm^2$ is
    (a) 0.35 (b) 0.71
    (c) 1.42 (d) 2.83
24. The maximum mixing time, of cement concrete, in minutes is limited to
    (a) 2 (b) 4
    (c) 6 (d) 10
25. The maturity of concrete is expressed as
    Maturity = Σ (time × temperature)
    The temperature reckoned as origin is
    (a) 0°C (b) –5°C
    (c) –11°C (d) –16°C
26. A cube of concrete as compared to cylinder of concrete is expected to have compressive strength
    (a) less by 5% (b) less by 15 %
    (c) more by 5% (d) more by 15%

## Answer Table

| | | | | | | | | | |
|---|---|---|---|---|---|---|---|---|---|
| 1. (b) | 2. (c) | 3. (c) | 4. (b) | 5. (a) | 6. (b) | 7. (d) | 8. (a) | 9. (a) | 10. (b) |
| 11. (d) | 12. (b) | 13. (d) | 14. (c) | 15. (c) | 16. (b) | 17. (a) | 18. (c) | 19. (b) | 20. (c) |
| 21. (d) | 22. (c) | 23. (c) | 24. (a) | 25. (c) | 26. (d) | | | | |

# 11

# Concrete Mix Design

## 11.1 INTRODUCTION

Conventional nominal mix proportioning often specified by rule of thumb such as 1:1:2; 1:2:4; 1:3:6, etc. have limited significance as these are with little consideration for the materials that will be used. Since the quantity of fine aggregate is fixed irrespective of the cement and the maximum size of aggregate, considerable variations in quality are obtained by this method. Therefore, nominal mix proportions, arbitrarily fixed, have little use in concrete mix design. Another reason not in favour of nominal mix concept is that the water-cement ratio, a most important factor governing concrete quality, is not specified for nominal mixes, and has to be kept as low as possible provided that the mix is fully compacted concrete. A more realistic approach is to specify a minimum strength for the concrete and to choose the proportions of cement, fine aggregate, coarse aggregate and water-cement ratio. There is trend away from the specification of nominal mixes on the strength basis.

Rational proportioning of the ingredients of concrete is the essence of *concrete mix design*. The proportions are controlled by factors governing the plastic state and the hardened state. If the condition of the plastic concrete is not satisfactory, it cannot be properly compacted and the performance of the hardened concrete will be considerably impaired, affecting the performance of the structure. Satisfactory compaction can be obtained only if the concrete is sufficiently workable for the method of compaction used. The ease of placement is governed by the workability, while the durability is related primarily to the water-cement ratio, both these properties being the pivotal points of proportioning.

The purpose of concrete mix design is to ensure the most optimum proportions of the constituent materials to meet the requirements of the structure being built. Mix design should ensure that the concrete:

(i) complies with the specifications of structural strength laid down, which is usually stated in terms of the compressive strength of standard test specimens,
(ii) complies with the durability requirements to resist the environment in which the structure will serve its functional life,
(iii) be capable of being mixed, transported, compacted as efficiently as possible without undue labour,
(iv) and lastly, but not least, be as economical as possible.

Thus concrete mix design may be defined as the art of obtaining a concrete of the required properties, at the lowest cost, by a suitable choice and proportions of available materials. Needless to say, a properly designed concrete mix for the specified strength requirements should have the minimum cement content to make the mix economical. It should, however, be stressed that the precise relationship falls between the properties of concrete and the specific characteristics of the mix such as water-cement ratio, aggregate-cement ratio and grading, apart from such elusive qualities as aggregate-particle shape and texture. Hence, concrete mix design cannot be mechanically done and is likely to remain an art, rather than a science, for some time to come.

The data used in selecting mix proportion should be expected merely to serve as a guide; they should be backed up by personal experience and a knowledge of the basic principles of concrete mix design. Nevertheless, their use is only the first state in designing a mix, and should be followed, invariably, by the making of trial mixes. Based upon the observations made on trial mixes the mix proportions have to be adjusted and the refinements carried to the stage where the optimum proportions have been attained.

To sum up, *concrete mix design* is still very much a problem of trial-and-error, and any calculations based on design data are really only a means of providing, at best, a starting point so that the first tests can be conducted. Of course, the hardened concrete should ultimately have the required strength, durability and surface finish.

**Notes: 1. The essential functional properties of hardened concrete such as strength, durability, and uniform appearance can only be assured if the workability and cohesiveness of fresh concrete are as specified for the given working conditions. Workability of fresh concrete and compressive strength of hardened concrete are the convenient properties, which can be observed and measured. These give an idea of the overall performance of the concrete mix, both in its wet state and final hardened state. In a more restrictive sense, workability can be measured by the slump test, the compacting factor test or the Vee-Bee test.**

**2. Compressive strength is usually measured on 150 mm cubes cast from concrete produced in the laboratory under a standard procedure. The test results of the cubes, however, do not truly represent the actual concrete strength in the structure due to variations in the degree of compaction, curing conditions at site, etc. In addition, the strength of the structure also depends upon the conditions during the tests, the shape and size of the structural member, and the manner in which it may have been placed in relation to other units. Hence, the mix should have a characteristic strength, *fck*, which is defined as the strength below which not more than 5 per cent of the test results (1–20 fractiles) as obtained from cubes should fall.**

Concrete mix proportions can be expressed in terms of volume or weight. The present trend is towards specifying mixes in terms of minimum strength requirements (usually with a specified minimum cement content), rather than by volume proportions. For example, M 20 design mix should have a characteristic strength of 20 $N/mm^2$, M 25 mix shall have a characteristic strength of 25 $N/mm^2$, and so on as given below:

| Grade designation | Specified characteristic compressive strength of 150-mm cubes at 28 days, $f_{ck}$, $N/mm^2$ |
|---|---|
| M 20 | 20 |
| M 25 | 25 |
| M 30 | 30 |
| M 35 | 35 |
| M 40 | 40 |

***Note*: M 20 is the minimum grade of concrete recommended for use in reinforced cement concrete (RCC) construction.**

## 11.2 PRINCIPLES OF MIX DESIGN

**The Principles of Proportioning:** The fundamental object in proportioning concrete or mortar mixes is the production of a durable material of requisite strength, watertightness, and other essential properties at minimum cost. To achieve these objectives, careful attention must be given to the selection of cement, aggregate, and water to the following considerations:

1. The mix must be workable so that it can be placed and finished without undue labour.
2. Since cement is the most costly ingredient in the mix, the proportion used should be as small as is consistent with the attainment of desired properties.

Within wide limits, experiments have shown:

(a) The strength and degree of watertightness of mixes, having like constituent materials, density, and workability, increase with the cement content.

(b) With the cement content, materials, and workability all constant, the strength and degree of watertightness increase with the density of the mix.

(c) For usual methods of placement, the strength and degree of watertightness of well-cured concrete and mortar are greatest when the mix is plastic (has a slump of approximately 50 mm). Drier mixes, although frequently as strong, are likely to be porous unless compacted by pneumatic rammers or electrically driven vibrators. Increasing the water content beyond that required for plasticity causes the strength to decrease rapidly.

(d) Concrete with 4–7 per cent, by volume, entrained air made by using an air-entraining cement or by adding air-entraining admixtures is more resistant to freezing and thawing action and also to scaling due to the use of salt for ice removal than concrete made with regular cement and without air-entraining admixtures.

In addition to the above, the following statements appear to be justified by the results of experience and tests:

(e) To proportion concrete for the maximum resistance to fire, a porous non-combustible aggregate of high specific heat together with cement sufficient to provide the requisite strength should be thoroughly mixed and placed with as little ramming as possible to produce a porous concrete.

(f) In proportioning concrete or mortar which is to be subjected to freezing temperatures shortly after placement, a minimum amount of water and a quick-setting cement should be used.

(g) Concrete for road construction should be made from a carefully graded, hard tough aggregate bound together with as small a proportion of rich mortar as is consistent with the required workability, strength, and imperviousness. In locations where resistance to freezing and thawing is required, the concrete should have 3–6 per cent of entrained air.

The principal methods used in scientific proportioning of mixes are based upon relationships between properties and ratio of cement to voids in the mix, or on the relationship between properties and the ratio of water to cement in the mix.

### *Design Requirements*

Before the engineer can begin to design a concrete mix the following information form the site of work is required:

(i) *Grade of concrete:* The grade M 20, M 25 connotes characteristic strength, *fck* of 20 N / mm$^2$, 25 N / mm$^2$, respectively, and standard deviation based on the degree of control to be exercised on site.

(ii) *Type of cement:* The grade of Ordinary Portland Cement (OPC) such as 33, 43, or 53 grade. Portland Pozzolana Cement (PPC) to relevant IS specifications.

(iii) *Type and size of aggregate:* Natural sand, crushed stone, gravel etc. conforming to IS:383–1970, quoting the source of supply.

(iv) *Nominal maximum size aggregate (MSA):* 40 mm, 20 mm, 10 mm, as per IS:383–1970.

(v) *Maximum/minimum cement content (kg/m$^3$):* This is required for durability / considerations.

(vi) *Type of mixing and curing water:* Whether fresh potable water, seawater, ground water is to be used.

(vii) *Maximum free water-cement ratio by weight:* This is required for considerations of strength and / or durability for different exposures and to meet appearance and other requirements, Figs 11.1 and 11.2, Tables 11.1, 11.2 and 11.3, respectively.

(viii) *Degree of workability of concrete:* This is dependent on placing and compaction conditions. Table 10.6.

(ix) *Air content:* This is inclusive of entrained air.

(x) *Type of admixture used.*

(xi) *Maximum/ minimum density of concrete.*

(xii) *Maximum/minimum temperature of fresh concrete.*

The mix should be designed to obtain the concrete having the desired durability (Tables 11.l, 11.2 and 11.3); workability (Table 10.6); and characteristic compressive of strength $f_{ck}$ not less than that for the particular grade.

The curves shown in Fig. 11.1 show 7-days cement strengths versus 28-days concrete strengths for 6 different water-cement ratios using Indian cements, the band (ranging 1 N / mm$^2$) imply that the relationship is not precise but is only of a general natural to be adopted as a guideline. These bands are also applicable to good quality PPC.

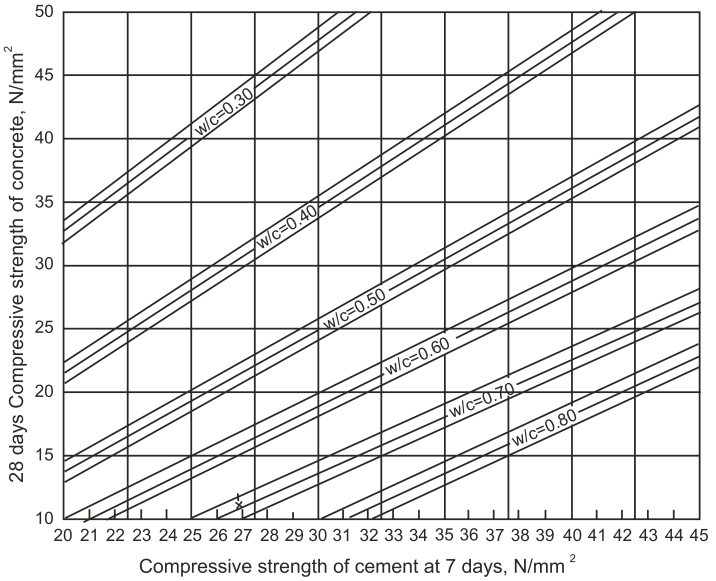

**Fig. 11.1 Cement strengths at 7 days versus concrete strengths at 28 days for 6 different water-cement ratios using Indian cements**

The Bureau of Indian Standards has drawn up curves (Fig 11.2) which shows a correlation between the water-cement ratio and the 28-days cube compressive strength of concrete made from cements of different grades / strengths, tested according to IS: 4031–1988, and included in IS: 10262–1982, Recommended Guidelines for Concrete Mix Design. These curves can be used for making trial mixes as recommended in IS: 10262–1982.

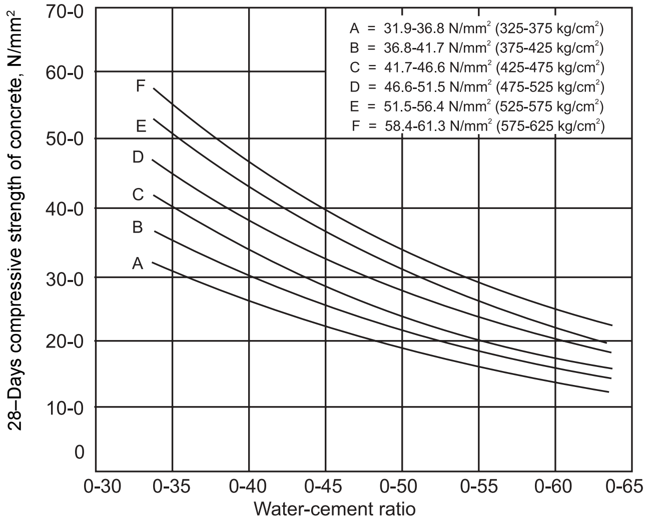

**Fig. 11.2 Relation between free water-cement ratio and concrete strength at 28 days for different cement strengths**

Mix design must be planned well in advance otherwise considerable time will be lost if the 28-days strength of cement is assessed in the laboratory first, and then the 28-days compressive strength of concrete and trial mixes are obtained. In practice the 28-days strength of cement may be assumed on the basis of the grade of cement (33, 43, or 53 grade) and its specified strength. To further reduce this time lag, the compressive strength of the concrete at 28-days may be estimated from the 7-days strength on the basis of a general relationship between the two strengths which varies and depends on the chemical composition of the cement type and quality of the aggregates, and the aggregate-cement ratio.

**Table 11.1 Maximum Water-Cement Ratio and Minimum Cement Content for Durability Considerations Under Different Conditions of Exposure**

| *Type of exposure* | **Plain concrete** | | | **Reinforced concrete** | | |
|---|---|---|---|---|---|---|
| | *Maximum Free water-Cement Ratio, by Weight* | *Minimum cement content, kg/m$^3$* | *Minimum grade of concrete* | *Maximum free water-cement, ratio, by weight* | *Minimum cement content kg/m$^3$* | *Minimum grade of concrete* |
| Mild | 0.60 | 220 | – | 0.55 | 300 | M 20 |
| Moderate | 0.60 | 240 | M 15 | 0.50 | 300 | M 25 |
| Severe | 0.50 | 250 | M 20 | 0.45 | 320 | M 30 |
| Very Severe | 0.45 | 260 | M 20 | 0.45 | 340 | M 35 |
| Extreme | 0.40 | 280 | M 25 | 0.40 | 360 | M 40 |

***Source*: IS: 456-2000.**

***Notes:*** **(i) When the maximum water-cement ratio can be strictly controlled, the cement content in Table 11.1 may be reduced by 10 per cent.**

**(ii) Minimum cement content is based on 20-mm aggregate; for 40-mm and 10 mm aggregates adjustments in the minimum cement content should be made as given in Table 11.2.**

**Table 11.2 Adjustment to Minimum Cement Contents for Aggregate Other Than 20 mm Nominal Maximum Size**

| *Sl No.* | *Nominal Maximum Aggregate Size (mm)* | *Adjustment to Minimum Cement Contents in Table 11.1 (kg/m$^3$)* |
|---|---|---|
| 1 | 10 | +40 |
| 2 | 20 | 0 |
| 3 | 40 | –30 |

## 11.3 INGREDIENTS OF THE MIX

Concrete is essentially a mixture of cement, water, coarse and fine aggregates which consolidates into a hard mass due to chemical reaction between cement and water. Each of the four constituents has a specific function. Besides most optimum use of ingredients, the selection of right kind of ingredients having properties which help to achieve desirable properties of concrete is of utmost importance. A brief discussion about the ingredients follows.

### Cement

The cement used should have a minimum compressive strength at different ages according to the relevant IS specification–IS:269–1987 (33 grade OPC), IS: 8112–1982 (43 grade OPC), IS:12269–1987 (53 grade OPC), IS:12230–1988 (Sulphate resisting cement), IS:1489-1976 (Portland Puzzolana cement), IS:455–1976 (Portland slag cement). All types of Portland cements are interchangeable for mix design, and the most commonly used ones are OPC, PPC, PSC, and SRC.

After water is added to the cement hydration occurs and continues as long as the relative humidity in the pores is above 85 per cent and sufficient water is available for the chemical reactions. On an average, 1 g of cement requires 0.253 g of water for complete hydration. As hydration proceeds, the ingress of water by diffusion through the deposit of hydration products around the original cement grain becomes more and more difficult, and the rate of hydration continuously decreases. In mature paste, the particles of calcium-silicate hydrates form an interlocking network which is a 'gel' having a specific surface of about 200 $m^2/g$. This gel is poorly crystalline, almost amorphous, and appears as randomly oriented layers of thin sheets or buckled ribbon. The gel is the heart of the concrete and is a porous mass. The interstitial spaces in the gel are called 'gel pores'. The strength giving properties and phenomena, such as creep and shrinkage are due to the porous structure of the gel, and the strength is due to the bond afforded by the enormous surface area.

## Aggregate

The size of the aggregate, particle shape, colour, surface texture, density (heavyweight or lightweight), impurities, all of which have an influence on the durability of concrete, should conform to IS: 383–1970.

During the process of hydration the products of hydration completely surround and bind together the aggregate particles in a solid hardened mass. Aggregates constitute nearly 70–75 per cent of the total volume of concrete. The strength of concrete is governed by the weakest element, be it the cement paste, the aggregate or the interface of the aggregate-cement paste. Strong aggregates are also more sound and durable in aggressive environments. The strength at the aggregate mortar interface is perhaps more critical, hence the shape, size and texture of the coarse aggregate is important. The aggregate should be clean, hard, strong, and durable, free from chemicals or coatings of clay or other fine material that can affect the bond with the cement paste.

Very sharp and rough aggregate particles or flat and elongated particles require more fine material to produce a workable concrete. Accordingly the water requirement and there from the cement content increases. Excellent concrete is made by using crushed stone but the particles should be roughly cubical or spherical in shape. Natural rounded aggregates having a smooth surface are better from the point of view of workability, but their bond with mortar may be weaker and are likely to produce concrete of lower flexural strength.

The maximum size of aggregate governs the strength and workability of the concrete. For a lean mix, a larger maximum size of aggregate gives better results, because for a given volume of aggregate, the total surface area is less. Depending on the maximum size of aggregate, the cement content for a specific strength is altered because at the same water-cement ratio different ranges of strength are possible for different sizes of aggregate. However, for a mix of high compressive strength a smaller maximum size of aggregate is preferable, and it is just not economically possible to make concretes of 28-days compressive strengths exceeding 40 $N/mm^2$ using 40-mm aggregate.

A statement of fact valid for all mix design is: *The smaller the maximum size of aggregate the greater the proportion of fine aggregate needed for concretes of identical cement contents and workability*. Also, the lower the cement content of the mix, and/or the more angular the coarse aggregate, the greater is the proportion of the fine aggregate required.

**Table 11.3 Maximum Water-Cement Ratio and Minimum Cement Content for Durability Considerations under Exposure to Sulphate Attack**

| *Class* | *Concentration of Sulphates expressed as $SO_3$ in soil* | | *In ground water, g/l* | *Type of cement* | *Dense, fully compacted concrete made with aggregate complying with IS: 383–1970* | |
|---|---|---|---|---|---|---|
| | *Total $SO_3$ per cent* | *$SO_3$ in 2:1 water extract, g/l* | | | *Maximum fresh water cement ratio, by weight* | *Minimum cement content, kg/m$^3$* |
| 1. | $< 0.2$ | $< 1.0$ | $< 0.3$ | OPC, or PPC, or PSC | 0.55 | 280 |
| 2. | 0.2 to 0.5 | 1.0 to 1.9 | 0.3 to 1.2 | OPC, or PPC, or PSC | 0.50 | 330 |
| 3. | | | | Supersulphated cement/SRC | 0.50 | 310 |
| 4. | 1.0 to 2.0 | 3.1 to 5.0 | 2.5 to 5.0 | Supersulphated cement/SRC | 0.45 | 370 |
| 5. | $> 2.0$ | $> 5.0$ | $> 5.0$ | Supersulphated cement/SRC with protective coating | 0.40 | 400 |

***Source:*** **IS: 456–2000.**

***Notes:***

1. **Cement content given in this table is irrespective of grade of cement.**
2. **Use of supersulphated cement is generally restricted where the prevailing temperature is above 40°C.**
3. **Supersulphated cement gives an acceptable life provided that the concrete is dense and prepared with a water-cement ratio of 0.4 or less, in mineral acids, down to pH 3.5.**
4. **The cement contents given in this table are the minimum recommended. For $SO_3$ contents near the upper limit of any class, cement contents above this minimum are advised.**
5. **For serve conditions, such as thin sections under hydrostatic pressure on one side only and sections partly immersed, considerations should be given to a further reduction of water-cement ratio.**
6. **Portland slag cement conforming to IS 455 with slag content more than 50 per cent exhibits better sulphate resisting properties.**
7. **Where chloride is encountered alongwith sulphates in soil or ground water, ordinary Portland cement with $C_3A$ content from 5 to 8 per cent shall be used in concrete, instead of sulphate resisting cement. Alternatively, Portland slag cement conforming to IS 455 having more than 50 per cent slag or blend or ordinary Portland cement and slag may be used provided sufficient information is available on performance of such blended cement in these conditions.**

The relative proportions of coarse to fine aggregate, and their distribution into different size fractions are given by sieve analysis, and plotted as grading curves. Depending upon the maximum size of aggregate, the workability required, the concentration of reinforcement, the cross-section of the member, etc. standard 'ideal' combined grading curves specifying limits of size fractions have been prepared by the Road Research Laboratory (RRL), UK and are reproduced from *Road Note No 4, Design of Concrete Mixes*. These curves have been prepared for aggregates of 40 mm and 20 mm maximum size and are widely used as a guide to select grading for aggregates to obtain a uniform and cohesive mix without segregation, Figs. 11.3 and 11.4 respectively. Similar curves for aggregate of maximum size 10 mm have been prepared by McIntosh and Entroy, Fig 11.5.

For preparing a mix design of desired workability, attempts should be made to proportion coarse and fine aggregates of different grading in such a ratio as to obtain the combined grading conforming to the grading zones as shown in Figs 11.3, 11.4 and 11.5. In general all size fraction of both types of aggregate should be present in the desired proportions. For example experience has shown that excess of fine sand results in higher water and cement contents while excess of coarse sand gives harsh unworkable mixes. For leaner mixes or when small size

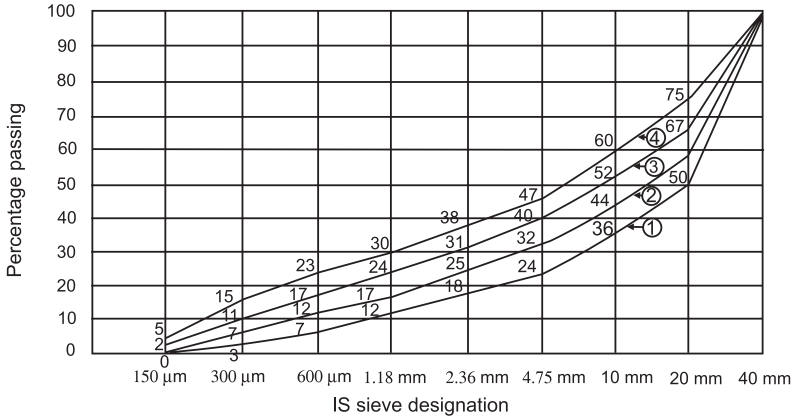

**Fig. 11.3 Grading curves for 40-mm maximum size of aggregate**

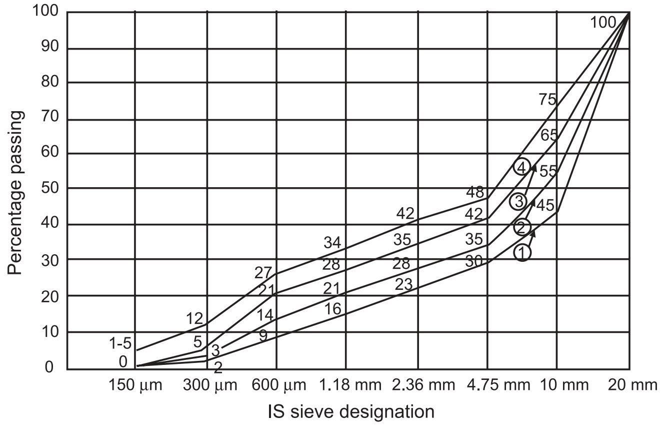

**Fig. 11.4 Grading curves for 20-mm maximum size of aggregate**

coarse aggregate are used a finer combined grading should be preferred, while for richer mixes a coarser combined grading is more desirable and economical.

It is also a fact that for any mix design there is no singly overall grading which is best for all sets of conditions. A finer grading should be used for leaner mixes, more workable mixes and for concretes made with poorly shaped aggregate particles, i.e., angular, flaky, or elongated particles with rough texture. A larger proportion of fine particles should also be employed in mixes where the maximum size of aggregate is small.

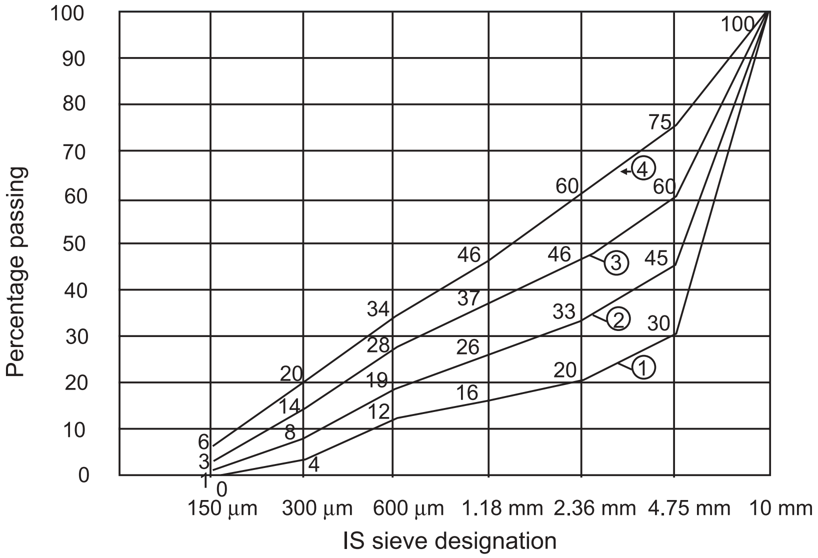

**Fig. 11.5 Grading curves for 10-mm maximum size of aggregate**

Likewise, no single grading is the best for any given type of mix. A finer grading should be used for condition which tends to promote segregation, e.g., transporting in jolting or vibrating containers over long distances by pneumatic placer or on a series of conveyor belts; discharging down inclined chutes into a heap; dropping through a considerable height or over reinforcement; and placing in form work, which is not mortar tight. When concrete is to be placed underwater or pumped there should be enough fine aggregate to provide a more plastic and cohesive mix than may otherwise be required. The higher the workability of concrete the greater is the proportion of fine aggregate needed.

The overall grading may also be governed by site conditions for considerations other than those of cohesiveness. Where concrete quality cannot be controlled the average proportion of fine aggregate should be increased to provide a greater margin of protection against any mix being under sanded. The proportion of fine aggregate may have to be increased or decreased for concrete whose appearance is of prime importance. The selection of a suitable grading requires sound judgement and experience. Nevertheless the final proportions of fine and coarse aggregate should be based on the behavior of the concrete when trial mixes are made under full scale conditions (i.e., one full bag of cement and a concrete mixer of adequate capacity), and it should then be apparent whether the mix is appreciably over or undersanded. In case of doubt about the most suitable proportion of fine aggregate it is usually safer to use a too high, rather than a too low proportion ever though it may increase the richness of the mix slightly so that there will be adequate protection against segregation, harshness, and therefore, against poor compaction. For instance using irregular gravel as coarse aggregate of 20 mm maximum size, natural sand, and normal methods of transport, experience would suggest that the overall grading should be somewhere near curves 2 or 3, Fig. 11.4, for 'medium' workability.

The amount of fine aggregate passing the 300 micron and 150-micron IS sieves influences the workability, finish, surface texture, and water gain. For concrete to have a smooth finish and proper cohesiveness the minimum amount of fine aggregate passing the 300-micron sieve should be at least 15 per cent and that passing 150-micron sieve at least 3–4 per cent of the total quantity of fine aggregate. The presence of adequate fines is more important in wetter mixes than in stiffer mixes, and in leaner mixes than in richer mixes. The entrainment of air through the use of air-entraining agents is mostly in the voids of 600 to 150 micron fraction of sand.

Generally, aggregates conforming to the requirements of IS: 383–1970, which do not have a large deficiency of excess of any size and which give a smooth grading curve produce the most satisfactory concrete. The recommended grading according to IS:383–1970, for single size coarse aggregate of nominal size 40 mm, 20 mm, 16 mm and 12.5 mm and 10 mm are given in Table 11.4. Similarly, IS:383–1970 has classified fine aggregates in four grading zones from coarser sand (zone I) to finer sand (zone IV). Fine aggregate falling under any zone is suitable for making concrete. The limit for any particular size may be accepted if it deviates from the limits specified by not more than ±5 per cent. This tolerance is not, however, applicable to limits specified for the 600-micron IS sieve, or the coarser limit of zone I (10-mm), or the finer limit of zone IV (150-micron) IS sieves.

The grading for fine aggregates are reproduced in Table 11.5.

**Table 11.4 Grading Limit for Single Size Coarse Aggregates**

| *IS sieve designation* | *Percentage passing for single-size aggregate of nominal size* | | | | | |
|---|---|---|---|---|---|---|
| | *60 mm* | *40 mm* | *20 mm* | *15 mm* | *12.5 mm* | *10 mm* |
| 80-mm | 100 | – | – | – | – | – |
| 63-mm | 85 – 100 | 100 | – | – | – | – |
| 40-mm | 0 – 30 | 85 – 100 | 100 | – | – | – |
| 20-mm | 0 – 5 | 0 – 20 | 85 – 100 | 100 | – | – |
| 16-mm | – | – | – | 85 – 100 | 100 | – |
| 12.5-mm | – | – | – | – | 85 – 100 | 100 |
| 10-mm | 0 – 5 | 0 – 5 | 0 – 20 | 0 – 30 | 0 – 45 | 85 – 100 |
| 4.75-mm | – | – | 0 – 5 | 0 – 5 | 0 – 10 | 0 – 20 |
| 2.36 | – | – | – | – | – | 0 – 5 |

*Source*: IS: 383–1970.

**Table 11.5 Grading Limits for Fine Aggregates**

| *IS sieve designation* | *Percentage passing for* zone I | zone II | zone III | zone IV |
|---|---|---|---|---|
| 10-mm | 100 | 100 | 100 | 100 |
| 4.75-mm | 90–100 | 90–100 | 90–100 | 95–100 |
| 2.36-mm | 60–95 | 75–100 | 85–100 | 95–100 |
| 1.18-mm | 30–70 | 55–90 | 75–100 | 90–100 |
| 600-micron | 15–34 | 35–59 | 60–79 | 80–100 |
| 300-micron | 5–20 | 8–30 | 12–40 | 15–50 |
| 150-micron | 0–10 | 0–10 | 0–10 | 0–15 |

***Source:*** **IS:383–1970.**

The recommendations for combined grading of coarse aggregates for use in concrete of good workability are given in IS:383–1970. These are applicable for maximum nominal size of 40 mm, 20mm, 16 mm, 12.5 mm, aggregates, Table 11.6.

**Tables 11.6 Grading Limits for Combined Coarse Aggregates**

| *IS sieve Designation* | *Percentage passing for graded aggregates of normal size* | | | | | | | | | | | |
|---|---|---|---|---|---|---|---|---|---|---|---|---|
| | *40-mm* | | | *20-mm* | | | *16-mm* | | | *12.5-mm* | | |
| 80-mm | | 100 | | | – | | | – | | | – | |
| 60-mm | | – | | | – | | | – | | | – | |
| 40-mm | 95 | – | 100 | | 100 | | | – | | | – | |
| 20-mm | 30 | – | 70 | 95 | – | 100 | | 100 | | | 100 | |
| 16-mm | | – | | | – | | 90 | – | 100 | | – | |
| 12.5 | | – | | | – | | | – | | 90 | – | 100 |
| 10-mm | 10 | – | 35 | 25 | – | 55 | 30 | – | 70 | 40 | – | 85 |
| 4.75-mm | 0 | – | 5 | 0 | – | 10 | 0 | – | 10 | 0 | – | 10 |
| 2.36 | | – | | | – | | | – | | | – | |

***Source:*** **IS:383–970.**

### *Specific Gravity of Aggregates*

The specific gravity of aggregates is also relevant to mix design. For heavy weight concrete of density exceeding 3,200 kg/m$^3$ material such as crushed barytes, limonite, iron ore, steel punching or small castings, with sp. gr. of 4.2, 4.75, 4 to 5 and 7.8 respectively are used as aggregate. Natural aggregate usually has a specific gravity between 2.6 and 2.7. Hence, while designing heavy weight concrete using such aggregates, allowance has to be made for the specific gravity of these heavier materials. The aggregate-cement ratio by weight should be so adjusted that the proportion of aggregate to cement by absolute volume remains constant. Also, if the specific gravities of coarse and fine aggregates differ, the proportions should be so worked out that the overall grading curve represents the absolute volume proportions instead of the weight proportions of each grade of material.

If the specific gravity of the fine aggregate is higher than that of the coarse aggregate, the mix will tend to segregate; however, it is better that both the aggregates should have nearly the same specific gravity. The aggregate crushing value for barytes is about 40, i.e., its mechanical strength is low; it should not, therefore, be used for concrete subjected to abrasion or for concrete requiring high minimum strength without checking if it is suitable. Barytes concrete has a lower ultimate compressive strength and it should not be used where high stresses are involved. The flexural strength of barytes concrete may also be less than that to ordinary concrete of the same compressive strength.

## Water

Water is required primarily for hydration of cement and to give fluidity to the plastic mass. Water should be clean and free from impurities. The permissible limits for solids in mixing and curing water as specified in IS:456–2000 are:

| | |
|---|---|
| Chlorides | |
| *for RC work* | 500 mg/l |
| *for plain concrete* | 2,000 mg/l |
| Sulphates | 400 mg/l |
| Inorganic matter | 3,000 mg/l |
| Organic matter | 200 mg/l |
| Suspended matter | 2,000 mg/l |

### Admixtures

Based on the properties admixture imparts to the concrete, a selection can be done and the manufacture's instructions followed for its method of use. The Bureau of Indian Standards has also brought out a standard for admixtures, IS: 9103.

## 11.4 ACCEPTANCE CRITERIA

The acceptance criteria for concrete in accordance with IS: 456–2000 are as follows.

### Criteria 1

Every sample shall have a test strength not less than the characteristic strength, $f_{ck}$ or if the test strength of one or more samples is less than the characteristic strength, each case should not be less than the greater of

(i) $f_{ck}$–1.35σ, and
(ii) 0.8 $f_{ck}$

and the average strength $f_{av}$ of all samples should not be less than

$$f_{ck} + \left(1.65 - \frac{1.65}{\sqrt{n}}\right)\sigma$$

where,

σ = standard deviation
$n$ = cumulative number of samples tested till date.

### Criteria 2

Concrete is taken as *not complying* with strength requirements if: the strength of any sample is less than the greater of

(i) $f_{ck}$ –1.35σ, and
(ii) 0.8$f_{ck}$

and the average strength of all samples, $f_{av}$ is less than

$$f_{ck} + \left(1.65 - \frac{3}{\sqrt{n}}\right)\sigma$$

## Standard Deviation

The standard deviation of a given grade of concrete can be calculated from the results of individual tests of concrete using the formula:

$$s = \sqrt{\frac{\sum (x-\bar{x})^2}{n-1}} = \sqrt{\frac{\sum \Delta^2}{n-1}}$$

where,

$x$ = strength of each test result in $n$ results

$\bar{x}$ = average of $n$ sample,

$\Delta$ = the deviation of the individual test strength from the average strength of $n$ samples, and

$n$ = number of sample test results.

If at least 30 test results for a particular grade of concrete at site with the same materials and equipment are not available, the standard deviation as given in Table 11.7, may be assumed.

**Table 11.7 Assumed Standard Deviation for Different Degree of Control**

| *S. No.* | *Grade of Concrete* | *Standard deviation for different degrees of control* | | |
|---|---|---|---|---|
| | | *Very good* | *good* | *fair* |
| 1. | M 10 | 2.0 | 2.3 | 3.3 |
| 2. | M 15 | 2.5 | 3.5 | 4.5 |
| 3. | M 20 | 3.6 | 4.6 | 5.6 |
| 4. | M 25 | 4.3 | 5.3 | 6.3 |
| 5. | M 30 | 5.0 | 6.0 | 7.0 |
| 6. | M 35 | 5.3 | 6.3 | 7.3 |
| 7. | M 40 | 5.6 | 6.6 | 7.6 |
| 8. | M 45 | 6.0 | 7.0 | 8.0 |
| 9. | M 50 | 6.4 | 7.4 | 8.4 |
| 10. | M 55 | 6.7 | 7.7 | 8.7 |
| 11. | M 60 | 3.8 | 7.8 | 8.8 |

***Source:*** **IS: 10262–1982**

## Target Strength

A more rational approach for assuming the standard deviation for different grades of concrete is given in the Building Research Establishment (BRE) publication, *Design of Normal Concrete Mixes*, (1988). At a given level of control the standard deviation increases as the specified characteristic strength increases up to a particular level and is independent of the specified strength above this level (Fig 11.6). As can be seen from the figure, the standard deviation is independent of the specified strength above 20 N / mm$^2$. The standard deviation to be adopted for any mix depends on the data available from the strength test results. If data available is from less than 20 results, curve A should be used to find the assumed standard deviation. If data from 20 or more results is available curve B should be used. If previous information of 30 or more results is available, the standard deviation for such results may be used provided that this is not less than the appropriate value obtained from curve B.

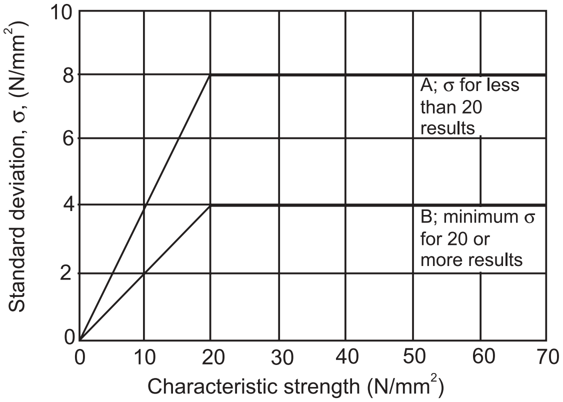

Fig. 11.6 **Standard Deviation Vs Characteristic Specified Strength**

This approach is contrary to the recommendations given in IS: 10262–1982, where the recommended standard deviation increases with the increase in specified characteristic strength. The BRE approach seems to be more logical and is backed up by observation of test results of concrete made at a large number of ready mix plants in the UK. In order to arrive at the target strength for mix design which is always higher than design strength established statistical concepts are used. The results of cube strength of concrete cast at site on random sampling of concrete follow the normal distribution curves when results of a large number of cube strengths are plotted against the frequency of occurrence. Figure 11.7 shows the properties of normal distribution curves.

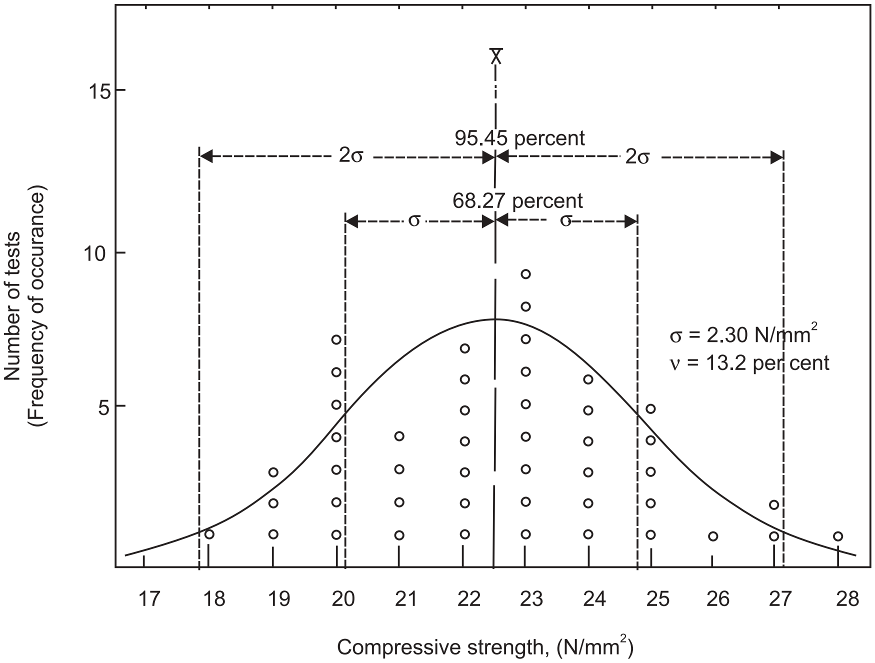

Fig. 11.7 **Normal Distribution Curve**

The number of results that are likely to fall below the target strength (mean strength) are related to standard deviation, $\sigma$. The relationship is given by the following equation:

Target strength = $f_{ck} + k\sigma$

where,

$f_{ck}$ = characteristic strength below which certain percentage of test results are expected to fall.

$k$ = constant depending on the probability of certain number of results likely to fall below $f_{ck}$

$\sigma$ = Standard deviation.

Characteristic strength is defined as that value below which not more than 5 per cent (1 to 20) results are expected to fall, in which case the value of $k$ will be 1.65 and the equation for target strength reduces to

Target strength = $f_{ck} + 1.65\ \sigma$

$k$ varies according to the probability of results falling below the specified characteristic strength. Table 11.8 gives the value of $k$ for different probabilities.

**Table 11.8 Value of *k* for Different Probabilities**

| *Sl. No* | *Probability of values falling below $f_{ck}$* | *k* |
|---|---|---|
| 1. | 1 in 5 | 0.84 |
| 2. | 1 in 10 | 1.28 |
| 3. | 1 in 15 | 1.50 |
| 4. | 1 in 20 | 1.65 |
| 5. | 1 in 40 | 1.86 |
| 6. | 1 in 100 | 2.33 |

For the probability of 1 in 100 the concrete will have to be designed for a much higher strength than the specified strength. In such a case target strength

$= f_{ck} + 2.33\ \sigma$

## Quality Control of Concrete

The importance of quality of concrete is being increasingly realised to derive the optimum benefit from the materials employed. Quality control does not merely signify testing of concrete cubes at 28 days; rather it actually permeates all aspects of the choice of materials, design, and workmanship—it commences much before any concrete is available for testing at 28 days.

Normally, specifications stipulate the 28 days compressive strength requirements. Though useful in establishing criteria, the limitations of compressive strength data must be considered. Test specimens indicate potential rather than actual strength of a structure, while poor workmanship in placing and curing of concrete may cause strength reductions which are not reflected in the cube strength results. To place too much reliance on too few tests will, therefore, be erroneous.

Control of concrete introduces many problems basically because strength is not known until 28 days after placing the concrete. Most specifications require minimum strength which must be exceeded, but statistical analysis indicates that such specification are difficult to comply with. It would, therefore, be more realistic to take a calculated risk based on the probabilities arrived at by statistical methods and allow a certain percentage of *lows.* By permitting a reasonable number of *lows* the engineer can hold the contractor to a standard which is possible to attain. It may be mentioned that the engineer-in-charge may permit a higher percentage of *lows* for mass concrete, foundation concrete, and for concrete used in hydraulic structures.

The savings in cement is made possible by quality control. However, this should not be regarded as the sole advantage, or even the main advantage, of using quality control methods. A well-designed and controlled concrete will be of uniform workability; this should result in the avoidance of porous honeycombed patches and weak patches of laitance. In consequence there will be no need to 'make-good' or to hack out and repair such patches. A good uniform concrete, moreover, should be less permeable and more durable than one that contains weak sections, and this should make for reduced maintenance costs.

## 11.5 PROPORTIONING THE INGREDIENTS

Some of the important methods of concrete mix design are the Indian Standard Method, the Road Research Laboratory (RRL) method, the Department of Environment (DOE) method, the American Concrete Institute (ACI) method, the Surface Index method, the Trial Mix method, the Maximum Density method, the Minimum Voids method, and the Fineness Modulus method. The use of any one of these methods, involves making preliminary and trial mixes, conducting tests on them and making adjustments in the proportions based on the test results. The scope of the book permits elaboration of IS method of mix design only.

### Preliminary Mixes

The object of any mix design method is to arrive at the optimum mix proportions of the various ingredients that will impart to the concrete the properties of workability, strength and durability as near to that as specified. To start with, a preliminary mix is prepared of about 12 kg, using the mix proportions given in any mix design method. The purpose of the preliminary mix is to judge whether the desired properties of the fresh concrete, such as workability, cohesiveness, compactability, finishability, etc. can be obtained with the proportions selected. This is judged by the mix designer through visual observation of the preliminary mix and certain thumb rules based on past experience.

If the mix is too sloppy the water content should be reduced and the cement and aggregate contents reworked, if the mix is too harsh and segregates, the fine aggregate should be increased and the coarse aggregate reduced in the same proportion, keeping the total aggregate-cement ratio constant. Depending on the experience of the designer two to three preliminary mixes might be necessary to arrive at the optimum mix proportions which will most likely meet the design parameters for the fresh concrete.

### Trial Mixes

The mix proportions arrived at from the preliminary mixes are then used to make a 'trial mix'. Generally one trial mix is sufficient but to ensure the designed strength of concrete at 7 and 28 days more than one trial mix is prepared in such a way that the water-cement ratio is increased or decreased from that obtained from the trial mix by 10 per cent. Necessary adjustments have, of course, to be made in the cement content and quantities of coarse and fine aggregates keeping the total quantity of water per $m^3$ of concrete constant in all the so obtained three mixes. These additional trial mixes are prepared to avoid delay in remaking the trial mixes in case the first one does not meet the strength requirements at 7 and 28 days.

A graph should then be prepared showing the relationship between the cement-water ratio (reciprocal of water-cement ratio) along the X-axis, and compressive strength at 7 days and 28 days along the Y-axis. The exact water-cement ratio is then calculated from the graph corresponding to the required design strength of the concrete. That trial mix which meets all the specified parameters for the various properties of concrete, both fresh and hardened, is finally selected as the mix design to be used.

Whenever there is a change in the source of fine or coarse aggregate it is necessary to conduct tests for sieve analysis, specific gravity, water absorption, etc. and readjust the mix proportions in the light of the results obtained. It is also advisable to use cement from the same plant to ensure that the variability in strength and other properties is kept to the minimum.

The mix design so obtained gives the weights, in kg, of the different ingredients required to make 1 $m^3$ of compacted concrete. After the proportions of the ingredients are finalised, about 0.03 $m^3$ of concrete is prepared for casting of 6 cubes of 150-mm size and for conducting the slump and V-B time test. The tests for the physical properties of the ingredients must be conducted first and then the cubes cast. There cubes are required for the compressive strength test at 7 days and three for the test at 28 days. The individual weights, in kg, of the ingredients can be obtained by multiplying the respective batch weights of $m^3$ of concrete by 0.03 or by 0.05 if 3 days strength is also required.

If the aggregates are batched in a surface wet condition the quantity of water added to the mix or the free water should be calculated. For example, if the surface water in the fine aggregate is 3 per cent and the quantity of fine aggregate is 500 kg / $m^3$, the quantity of water should be reduced by $500 \times \frac{3}{100} = 15$ kg or 15 litres per $m^3$ of concrete while the weight of fine aggregate should be increased by the corresponding quantity, in this case, 15 kg. Thus the batching quantity of the fine aggregate will be 515 kg / $m^3$ (500 + 15) of concrete.

If the aggregates are batched in a dry condition the batch weight of aggregates should be reduced and the weight of the mixing water increased by the corresponding amount. For example if the water absorption of coarse aggregates is 2 per cent and batch weight 1,300 kg / $m^3$ and the water absorption of fine aggregate 0.4 per cent and batch weight 500 kg / $m^3$ the quantity of mixing water per $m^3$ of concrete should be increased by

$$\frac{2}{100}\times 1300+\frac{0.4}{100}\times 500 = 26 + 2.0 = 28.0 \text{ kg.}$$

Thus the quantity of coarse aggregate should be decreased by 26 kg and of the fine aggregate by 2.0 kg. If the above quantity of water is not added the dry aggregate will absorb water from the mix, thus reducing the effective water-cement ratio, which will in turn, adversely affect the workability of the mix.

There are four stages of moisture in the aggregate from bone dry condition to moist condition. The intermediate stage is a saturated surface dry (SSD) condition which is the ideal condition to use in mix design. In SSD condition the aggregate will neither absorb mixing water making the mix harsh, nor will they contribute extra surface water to the mixing water resulting in an increase in the water-cement ratio and consequently a loss in the strength. For this reason, in mix design aggregate are assumed to be in a SSD condition and water recommended for mixing is calculated from the free water-cement ratio and recommended cement content in the mix.

### *Tests on Trial Mixes*

The tests to be conducted on trial mixes are:

(i) slump and / or Vee-Bee test
(ii) determination of unit weight, kg / m$^3$, of fresh concrete, and
(iii) making and curing of test cubes for the compression test.

Based on the results of the tests some adjustments are then required to be made to the mix proportions. For workability, an experienced technologist can adjust the water content by inspection if the workability falls outside the specified range. Initially, it would be prudent to without a small quantity of the mixing water until the technologist has visually satisfied himself that more water is definitely required to obtain the desired workability. If, however, at the designed water content the workability of the trial mix seems lower than that required, additional water should be added to achieve the required workability. When the mixing and workability measurements are completed a change of water content may still be required, either for use in the field mix or for a further trial mix which may be estimated from various procedures prescribed in different mix design methods. When measuring workability, the concrete should also be subjectively assessed for its other rheological properties, which may require a change in the relative aggregate properties.

The density of fresh concrete should be measured and the resultant value compared with the density value, kg / m$^3$, employed in mix design. If there is an appreciable difference, the constituent contents in kg / m$^3$ and the unit proportions of the trial mix will differ from those given in the initial mix design. The initial design values should then be corrected by the ratio of measured density to assumed density so as to obtain the actual weights in kg / m$^3$ of the trial mix.

The strength test results should become available for comparison with the design strength and an adjustment made, if required, to the water-cement ratio obtained from the curves given in Fig 11.2. Minor adjustments may be made to the mix proportion for use in field mixes without preparing further trial mixes. Nevertheless if large adjustments have to be made to the water-cement ratio it would be advisable to prepare a second trial mix adopting the revised proportions and recalculated batch weights based on the updated value for density of the mix. With a view to avoid delay in making a second trial mix it may be more expedient to make two or more trial mixes initially using the same water content but with different water-cement ratio. This has been explained earlier.

## 11.6 IS METHOD OF MIX DESIGN

This method, now widely used in the country, is recommended for designing mixes for general types of construction, using the ingredients of concrete normally available. The design is carried out for a specified compressive strength and workability of concrete using continuously graded aggregates. The method can be used for both, reinforced and prestressed concretes. The method is not to be used for the design of mixes for flexural strength, or when gap graded (not continuously graded) aggregates, or when puzzolana, or admixtures are used.

The basic assumption made in the IS method is that the compressive strength of concrete is based on the water-cement ratio of the concrete mix. Further, for a given type, shape, size and grading of aggregates, the amount of water determines the workability for normal concretes.

However, there are other factors which also affect the properties of concrete, for example, the quality and quantity of cement, water and aggregates; method of transporting, placing, compacting and curing of the concrete. Hence, the proportions arrived at for the mix design should be considered only as a basis for a trial, subject to modification in the light of experience and the actual materials that will be used at site.

In the IS method the general principles and requirements of basic data remain unchanged. That is, specifying characteristic strength, workability recommendations in terms of compacting factor Vee-Bee time or slump, type and grade of cement, maximum size of aggregate used, grading of aggregates according IS: 383–1970, and durability requirements in terms of minimum cement content and maximum water-cement ratio for various exposure conditions (Table 11.1). The procedure of target strength of laboratory trial mixes is also followed.

### Target Strength

The IS method uses the value of standard deviation based on the degree of quality control to be selected depending upon the infrastructure and practices adopted at site, such as 'very good', 'good' and 'fair' (Table 11.7).

'Very good' degree of control would require the following conditions at site: Fresh cement from a single source and regular tests, weigh-batching of all materials, aggregate supplied in single sized, control of aggregate grading and moisture content, control of water added, frequent supervision, regular workability and strength tests, and field laboratory facilities.

'Good' degree of control would require the following conditions at site: Carefully stored cement and periodic tests, weigh-batching of all materials, controlled water, graded aggregates, occasional grading and moisture tests, periodic checks of workability and strength, intermittent supervision, and experienced workers.

'Fair' degree of control would require the following conditions at site: Proper storage of cement, volume batching of all aggregates, allowance for bulking of sand, weight-batching of cement, water content controlled by inspection of mix, and occasional supervision and tests.

The values of standard deviation are then used for working out the target strength of the mix design whenever results of a sufficiently large number of tests, say at least 30, are not available. As mentioned earlier, it can be seen that standard deviation increases as the grade of concrete increases for a given degree of quality control.

### Selection of Water-Cement Ratio

As mentioned earlier, different cements and different types, size gradings and shapes of aggregate can produce concrete of different compressive strengths for the same water-cement ratio. Hence, the IS method recommends that a relationship be established between compressive strength and the free water-cement ratio for the materials actually to be used. If such data is not readily available or not easily obtainable, the standard has drawn up curves giving the relationship between water-cement ratio and compressive strength for six different strengths of cement, (Fig. 11.2). These range from 31.9 to 36.8 N / mm$^2$ (325 to 375 kg / cm$^2$) to 56.4 to 61.3 N / mm$^2$ (575 to 625 kg / cm$^2$) and in essence cover the three different grades of cement, manufactured in the country, namely 33 grade, 43 grade and 53 grade OPC.

After fixing the target strength of the mix the corresponding water-cement ratio can be found from the curve the corresponding 28-days strength of cement to be used in the mix (Fig 11.2).

The free water-cement ratio now obtained is checked against the requirements of durability under various conditions of exposure expected during the life of the structure (Table 11.1), and the *lower* of the two values should be adopted.

## Water Content and Fine to Total Aggregate Ratio

In the IS method the quantity of mixing water per unit volume of concrete and the ratio of the fine to total aggregate depends on the nominal size and type of aggregate. This is because aggregate of different maximum size, grading, surface texture, shape, and other characteristics produce concretes of different compressive strengths for the same free water-cement ratio. Thus, for concrete of grade up to M 35 the maximum size of aggregate may be up to 40 mm while for grades above M 35, the maximum size of aggregate of 20 mm is recommended (Table 11.9). As can be seen from the table the ratio of fine aggregate to total aggregate varies inversely to the nominal maximum size aggregate.

**Table 11.9 Approximate Sand and Water Contents per m$^3$ of Concrete**

| *Nominal maximum Size of aggregate, mm* | *Water content per m$^3$ of concrete kg* | *Sand as percentage of total aggregate by absolute volume* |
|---|---|---|
| | For Grades up to M 35 | |
| 10 | 208 | 40 |
| 20 | 186 | 35 |
| 40 | 165 | 30 |
| | For Grades above M 35 | |
| 10 | 200 | 28 |
| 20 | 180 | 25 |

***Source:*** **IS:10262–1982.**

***Note:*** **Water content corresponds to saturated surface dry aggregate.**

The quantity of water per m$^3$ of concrete and the sand content as a percentage of total aggregates in the Table 11.9 are based on the assumption that the coarse aggregates are crushed and angular conforming to IS: 383–1970; the fine aggregate consisting of natural sand conforms to zone II grading of IS: 383–1970; workability correspond to a compacting factor of 0.80, and the water-cement ratio (by mass) is 0.6 for grades up to M 35 and 0.35 (by mass) for grades above M 35. The aggregates must be in a saturated surface dry (SSD) condition.

For other conditions of workability, water-cement ratio, grading of fine aggregate, and for rounded aggregates certain adjustments have to be made in the quantity of mixing water and the ratio of fine to total aggregate as given in Table 11.9. These adjustments are given in Table 11.10.

## Cement Content

The cement content per m$^3$ of concrete is calculated from the free water-cement ratio and the quantity of water required per m$^3$ of concrete (Table 11.9). For example, the free water-cement ratio for a target mean strength of 30 N/mm$^2$ is 0.45 for 28-days cement strength of 475–525 (curve d, from Fig 11.2). For maximum size aggregate of 20 mm, the quantity of water will be

186 liter (kg), and the sand content 35 per cent of the absolute volume of total aggregates (Table 11.9). The cement content will therefore be:

$$\frac{186}{0.45} = 413.3 \text{ kg.}$$

The mix will require necessary correction in the ratio of fine aggregate to total aggregates due to a change in the water-cement ratio to 0.45 as against 0.6 assumed (Table 11.10). Similarly a correction may be necessary in the water content per m$^3$ of

$$\text{Hence, total water to be added} = 186 + 5.58 \qquad [(186 \times 3/100 = 5.58)]$$

$$= 191.58 \text{ lit (kg)}$$

This will need a change in the cement content to keep the water-cement ratio constant. Hence, cement content per m$^3$ will be

$$\frac{191.58}{0.45} = 425.73 \text{ kg/m}^3.$$

As in the case of water-cement ratio, the cement content thus calculated has to be checked against the requirements of durability under various conditions of exposure during the life of the structure (Table 11.1) and the greater of the two values should be adopted.

## Fine and Coarse Aggregate Content

After obtaining the cement content, the water content and the percentage of fine aggregate to total aggregate in terms of absolute volume, the quantities of fine and coarse aggregate are calculated from the equations given below:

*for fine aggregate*

$$V = \left\{W + \frac{C}{S_c} + \frac{1}{p}\frac{f_a}{S_{f_a}}\right\} \times \frac{1}{100}$$

**Table 11.10 Adjustment of Values in Water Content and Sand Percentage for Conditions other than those in Table 11.9**

| *Change in condition stipulated in Table 11.9* | *Adjustment required in* | |
|---|---|---|
| | *water content* | *sand in total aggregate* |
| For sand confirming to grading zone 1, Zone III or zone IV of IS: 383–1970 | 0 | +1.5 per cent for zone I<br>−1.5 per cent for zone III<br>−3.0 per cent for zone IV |
| Increase or decrease in the value of compacting factor by 0.1 | ± 3 per cent | 0 |
| Each 0.05 increase or decrease in free water-cement ratio | 0 | ± 1 per cent |
| For rounded aggregate | −15 kg/m$^3$ | −7 per cent |

***Source:*** **IS: 10262–1982.**

*for coarse aggregate*

$$V = \left\{ W + \frac{C}{S_c} + \frac{1}{1-p}\frac{C_a}{S_{ca}} \right\} \times \frac{1}{100}$$

Where,

$V$ = absolute volume of fresh concrete; i.e., gross volume, $m^3$—volume of entrapped air
$W$ = mass of water per $m^3$ of concrete, kg or lit
$C$ = mass of cement per $m^3$ of concrete, kg
$S_c$ = specific gravity of cement
$p$ = ratio of fine aggregate to total aggregate by absolute volume
$f_a$, $C_a$ = total quantity of fine and coarse aggregate per $m^3$ of concrete, respectively, kg
$S_{fa}$, $S_{ca}$ = specific gravity of saturated surface dry fine and coarse aggregates.

The entrapped air in the concrete depends upon the maximum size of aggregate used in making the concrete. Table 11.11 gives quantity of entrapped air for different maximum sizes of aggregate.

**Table 11.11 Aporoximate Air Content**

| *Nominal maximum size* of aggregate (mm) | *Entrapped air, percentage of* volume of concrete |
|---|---|
| 10 | 3.0 |
| 20 | 2.0 |
| 40 | 1.0 |

## Examples

**Example 11.1:** At a site, the first 30 test results in $N/mm^2$, for M 25 concrete are as follows: 31.4, 32.5, 30.9, 33.2, 32.7, 31.8, 33.0, 32.5, 33.4, 30.0, 34.1, 33.8, 29.7, 26.3, 24.6, 25.4, 27.8, 32.6, 28.3, 31.7, 30.0, 29.8, 24.3, 23.2, 24.9, 27.5, 22.0, 26.1, 25.5, 30.8.

The results of the three test cubes of the 31st sample are 23, 24.5 and 25.
Ascertain the acceptability of concrete.

***Solution:*** As per IS:465–2000, concrete corresponding to 31st sample may be acceptable even if some of the cubes have strength less than $f_{ck}$.

For 31st sample, $x = \frac{23 + 24.5 + 25}{3} = 24.2 \text{ N/mm}^2$, which is less than $f_{ck}$ ($f_{ck} = 25 \text{N/mm}^2$)

For the given 30 test results, $\bar{x} = 29.32 \text{ N/mm}^2$ and $\sigma = 3.56$

Now applying the provisions of the acceptance criteria:

*(i)* $f_{ck} - 1.35\,\sigma = 25 - 1.35 \times 3.56$
$= 20.19 \text{ N/mm}^2$

(ii) $0.8 f_{ck} = 0.8 \times 25 = 20 \text{ N/mm}^2$

The greater of (i) and (ii) is $20.19 \text{ N/mm}^2$. The test result is $24.2 \text{ N/mm}^2$ which is greater than $20.19 \text{ N/mm}^2$, and hence, the concrete is acceptable.

(iii)
$$f_{av} = f_{ck} + \left\{1.65 - \frac{1.65}{\sqrt{n}}\right\}\sigma$$
$$= 25 + \left\{1.65 - \frac{1.65}{\sqrt{31}}\right\}3.56$$
$$= 25 + 4.82$$
$$= 29.82$$

$$\text{Current mean, } \bar{x} = \frac{30 \times 29.32 + 24.2}{31} = 29.15 \text{ N/mm}^2$$
$$< 29.82 \text{ N/mm}^2$$

Hence concrete cannot be accepted straightaway.

***Criteria 2***

Now,
$$f_{av} = f_{ck} + \left\{1.65 - \frac{3}{\sqrt{n}}\right\}\sigma$$
$$= 25 + \left\{1.65 - \frac{3}{\sqrt{31}}\right\} \times 3.56$$
$$= 25 + 3.96$$
$$= 28.96 \text{ N/mm}^2$$

Therefore $\bar{x}$ is greater than $f_{av}$ (29.15 > 28.96), hence concrete cannot be rejected also. This is the case where the engineer–in–charge should be consulted and his decision taken as final.

**Example 11.2:** First ten results, in N/mm$^2$, of a M 15 concrete at a site are 22.3, 20.1, 21.4, 18.7, 17.5, 19.6, 14.7, 15.9, 16.7, 20.5. The test result corresponding to the 11$^{th}$ sample is 22.1 N/mm$^2$. Is this concrete acceptable? Assume the quality control to be good.

***Solution:*** $\bar{x}$ corresponding to first ten results is 18.74 N/mm$^2$

As the number of test samples are less than 30, the value of $\sigma$ has to be assumed as per Table 11.7, $\sigma = 3.5$.

Applying provisions of acceptance criteria:

***Criteria 1***

(i) $f_{ck} - 1.35\,\sigma = 15 - 1.35 \times 3.5 = 10.28$ N/mm$^2$
(ii) $0.8\, f_{ck} = 0.8 \times 15 = 12$ N/mm$^2$
The greater of (i) and (ii) is 12 M/mm$^2$. The test result of 11th sample is 22.1 N/mm$^2$, which is greater than 12 N/mm$^2$, and hence the concrete is acceptable.

(iii)
$$f_{av} = f_{ck} + \left\{1.65 - \frac{1.65}{\sqrt{n}}\right\}\sigma$$

$$= 15 + \left\{1.65 - \frac{1.65}{\sqrt{11}}\right\}3.5 = 15 + 4.03 = 19.03 \text{ N/mm}^2$$

$$\text{Current } \bar{x} = \frac{10 \times 18.74 + 22.1}{11} = 19.05 \text{ N/mm}^2$$

$$> 19.03 \text{ N/mm}^2$$

Hence, the concrete is acceptable.

**Examples 11.3:** Design a concrete mix to be used in structural elements by IS method for following requirements.

| | | |
|---|---|---|
| (i) | Characteristic compressive strength at 28 days, $f_{ck}$ | 25N / mm$^2$ |
| (ii) | Maximum size of the available aggregate | 20 mm |
| (iii) | Shape of coarse aggregate | angular |
| (iv) | Degree of workability desired, compacting factor | 0.85 |
| (v) | Degree of quality control | good |
| (vi) | Type of exposure | moderate |
| | Test data for concrete making materials | |
| | Specific gravity of cement | 3.15 |
| | Specific gravity of coarse aggregate | 2.72 |
| | Specific gravity of fine aggregate | 2.66 |
| | Water absorption (air dry to saturated surface dry) in coarse aggregate, per cent | 0.5 |
| | Surface moisture | |
| | coarse aggregate | nil |
| | Fine aggregate, per cent | 2 |
| (vi) | Compressive strength of cement at 28 days, | 51 N / mm$^2$ |
| | Sieve analysis | |

| *IS Designation* | *Cumulative percentage passing* | | *Sand* |
|---|---|---|---|
| | Fraction I<br>10 mm | Fraction II<br>20 mm | |
| 40 mm | 100 | 100 | |
| 25 mm | 100 | 100 | |
| 20 mm | 100 | 88 | |
| 12.5 mm | 100 | 24 | |
| 10 mm | 90 | 12 | 100 |
| 4.75 | 4 | 1 | 92 |
| 2.36 mm | 3 | – | 86 |
| 1.18 mm | – | – | 78 |
| 600-micron | – | – | 64 |
| 300-micron | – | – | 16 |
| 150-micron | – | – | 2 |
| passing 150 micron | – | – | – |

***Note***: Sand conforming to zone III of IS: 383–1970

***Solution: Step 1:*** For the degree of quality control specified, namely, good the value of standard deviation $\sigma$ read from Table 11.7 = 5.3 N / mm$^2$. Hence, the target mean strength for the desired characteristic compressive strength

$$= 25 + 1.65 \times 5.3$$
$$= 33.745 \text{ N / mm}^2$$

***Step 2:*** Corresponding to this target mean strength the water cement ratio is read from the appropriate curve corresponding to the 28 days strength of cement (Fig. 11.2). For a cement strength of 51 N / mm$^2$, curve D is selected and the water-cement ratio 0.46 obtained. This value has now to be checked against the maximum limit of the water-cement ratio for the given exposure condition. Table 11.1 for moderate exposure and reinforced concrete the maximum water-cement ratio recommended is 0.50. Hence value of 0.46 obtained is acceptable.

***Step 3:*** For maximum size of aggregate of 20 mm, the air content is taken as 2.0 per cent (Table 11.11). Since the required grade of concrete is M 25 which is lower than M 35 grade, water content per m$^3$ of concrete = 186 litres and sand as percentage of total aggregate by absolute volume = 35 (Table 11.9).

Since Table 11.9 is based on certain specific conditions, adjustments as per Table 11.10 have to be made for any deviations in these values as given below.

| | *Adjustment in water, content, per cent* | *Adjustment in sand content per cent of total aggregates by volume* |
|---|---|---|
| (i) For sand conforming to grading zone III | nil | – 1.5 per cent |
| (ii) Increase in value of the compacting factor by(0.85–0.80) = 0.05 | $\frac{0.05}{0.1} \times 3$<br>$= 1.5$ | nil |
| (iii) Decrease in the value of water-cement ratio by (0.50–0.46) = 0.04 | nil | $\frac{-0.04}{0.05} \times 1 = -0.8$ |
| Overall adjustment | + 1.5 per cent | –2.8 per cent |

Thus after incorporating the above adjustments the sand content = 35 – 2.8 = 32.2 and the water content $= 1.86 + 1.5 \times \frac{186}{100} = 188.8$ lit.

***Step 4:*** Determination of cement content:

Water-cement ratio = 0.46

Quantity of water after adjustment = 188.8 liters

Therefore, cement content $= \frac{188.8}{0.46} = 410.43$ kg

This cement content has now to be checked against the minimum cement content required for mild exposure condition in reinforced concrete. The minimum cement content specified in Table 11.1 is 300 kg / m$^3$ from durability consideration. Therefore, the value of 410.43 kg / m$^3$ is acceptable.

***Step* 5:** Now quantities of coarse and fine aggregates are worked out per m$^3$ of concrete as given below.

$$\begin{aligned}\text{Volume of concrete} &= 1\text{–}0.02 \text{ (entrapped air)}\\ &= 0.98 \text{ m}^3\\ &= 980 \text{ liters.}\end{aligned}$$

$$980 = 188.8 + \frac{410.43}{3.15} + \frac{f_a}{0.322 \times 2.66}$$

$$f_a = 566.08 \text{ kg}$$

Similarly,

$$980 = 188.8 + \frac{410.43}{3.15} + \frac{C_a}{(1 - 0.322) \times 2.72}$$

$$C_a = 1218.81 \text{ kg}$$

Therefore, the mix proportion becomes:

| *Cement* | *Water* | *Sand* | *Coarse aggregate* |
|---|---|---|---|
| 410.43 | 188.8 | 566.08 | 1218.81 |
| or 1 | 0.46 | 1.379 | 2.97 |

Adjustments required for water absorption:

Water absorbed by coarse aggregate

$$= \frac{1218.81 \times 0.5}{100} = 6.09 \text{ lit}$$

Free water in fine aggregate

$$= \frac{566.08 \times 2}{100} = 11.32 \text{ lit}$$

Therefore, actual quantity of water required

$$= 188.8 + 6.09 - 11.32 = 183.57 \text{ lit}$$

Actual quantity of coarse aggregate

$$1218.81 - 6.09 = 1212.72$$

$$\text{and sand} = 566.08 + 11.32 = 577.4$$

Therefore, the actual quantities of materials required are:

| *Cement* | *Water* | *Sand* | *Coarse* |
|---|---|---|---|
| 410.43 kg | 183.57 lit | 577.4 kg | 1212.72 kg. |

***Step 6:*** The fraction I and II of the coarse aggregate are to be now combined to give a combined grading in accordance with IS: 383–1970 of 20 mm maximum size aggregate. To obtain a combined grading, IS: 383–1970 recommends that the fraction passing the 10 mm sieve shall be in the range of 25 to 55 per cent, or on an average of 40 per cent. Trials are then made

to combine the fraction I and II in the proportion of, say 40:60 to see whether the combined grading is obtained. This is given below:

| *Is sieve designation* | *Fraction I, 10-mm MSA, 40 per cent* | *Fraction II, 20-mm MSA, 60 per cent* | *Combined grading* | *Desired grading 20-mm MSA, as per IS:383* |
|---|---|---|---|---|
| 40-mm | 40 | 60 | 100 | 100 |
| 25-mm | 40 | 60 | 100 | 100 |
| 20-mm | 40 | 55.2 | 95.2 | 95 to 100 |
| 12.5-mm | 40 | 15 | 55 | – |
| 10-mm | 35.2 | 8.4 | 43.6 | 25 to 55 |
| 4.75-mm | 4.8 | 1.8 | 5.6 | 0 to 10 |
| 2.36-mm | 1.2 | – | 1.2 | – |

It can be observed that if the fractions I and II are combined in the ratio of 40:60 the desired combined grading as recommended in IS: 383–1970 is obtained. The mix proportions for the trial mix will now be

| Cement | water | sand | coarse fraction I<br>10 mm MSA | aggregate fraction II<br>20 mm MSA |
|---|---|---|---|---|
| 410.43 | 183.57 | 577.4 | 485.09 | 727.63 |
| OR, 1 | 0.447 | 1.406 | 1.182 | 1.773 |

**Example 11.4:** Design a concrete mix to be used in structural elements by IS method for following requirements.

| | | |
|---|---|---|
| (i) | Characteristic compressive strength at 28 days, $f_{ck}$ | 30 N/mm$^2$ |
| (ii) | Maximum size of the available aggregate | 20 mm |
| (iii) | Shape of coarse aggregate | angular |
| (iv) | Degree of workability desired, compacting factor | 0.85 |
| (v) | Degree of quality control | good |
| (vi) | Type of exposure | moderate |
| | Test data for Concrete Making Materials | |
| | Specific gravity of cement | 3.15 |
| | Specific gravity of coarse aggregate | 2.72 |
| | Specific gravity of fine aggregate | 2.66 |
| | Water absorption (air dry to saturated surface dry) | |
| | in coarse aggregate, per cent | 0.5 |
| | Surface moisture | |
| | Coarse aggregate | nil |
| | Fine aggregate, per cent | 2 |

(vi) Compressive strength of cement at 28 days, 51 N/mm$^2$

Sieve analysis

| *IS Designation* | *Cumulative percentage Passing*<br>Fraction I<br>10 mm | <br>Fraction II<br>20 mm | *Sand* |
|---|---|---|---|
| 40 mm | 100 | 100 | |
| 25 mm | 100 | 100 | |
| 20 mm | 100 | 88 | |
| 12.5 mm | 100 | 24 | |
| 10 mm | 90 | 12 | 100 |
| 4.75 mm | 4 | 1 | 92 |
| 2.36 mm | 3 | – | 86 |
| 1.18 | – | – | 78 |
| 600-micron | – | – | 64 |
| 300-micron | – | – | 16 |
| 150-micron | – | – | 2 |
| Passing 150 micron | – | – | – |

***Note:*** **sand conforming to zone III of IS: 383–1970**

**Solution:** ***Step 1:*** For the degree of quality control specified, namely, good the value of standard deviation $\sigma$ read from Table 11.7 = 6 N/mm$^2$. Hence, the target mean strength for the desired characteristic compressive strength

$$= 30 + 1.65 \times 6 = 39.9 \text{ N/mm}^2$$

***Step 2:*** Corresponding to this target mean strength the water-cement ratio is read from the appropriate curve corresponding to the 28 day strength of cement (Fig. 11.2). For a cement strength of 51 N/mm$^2$ curve D is selected and the water-cement ratio 0.4 obtained. This value has now to be checked against the maximum limit of the water-cement ratio for the given exposure condition. Table 11.1 for moderate exposure and reinforced concrete the maximum water-cement ratio recommended is 0.50. Hence the value of 0.40 obtained is acceptable.

***Step 3:*** For maximum size of aggregate of 20 mm, the air content is taken as 2.0 per cent (Table 11.11). Since the required grade of concrete is M 30 which is lower than M 35 grade, water content per m$^3$ of concrete = 186 litres and sand as percentage of total aggregate by absolute volume = 35 (Table 11.9).

Since Table 11.9 is based on certain specific conditions, adjustments as per Table 11.10 have to be made for any deviations in these values as given below:

| | *Adjustment in water content, per cent* | *Adjustment in sand content per cent of total aggregates by volume* |
|---|---|---|
| (i) For sand conforming to grading zone I | nil | –1.5 per cent |
| (ii) Increase in the value of the compacting factor by (0.85–0.80) = 0.05 | $\frac{0.05}{0.1} \times 3 = 1.5$ | nil |

| | | | |
|---|---|---|---|
| (iii) | Decrease in the value of water-cement ratio by (0.50–0.40) = 0.10 | nil | $\frac{0.10}{0.05} \times (1) = 2.0$ |
| | overall adjustment | +1.5 per cent | –3.5 per cent |

Thus after incorporating the above adjustments the sand content = 35–3.5 = 31.5

and the water content = $186 + 1.5 \times \frac{186}{100} = 188.8$ lit.

***Step 4:*** Determination of cement contents:

Water-cement ratio = 0.40

Quantity of water after adjustment = 188.8 liters

Therefore, cement content $= \frac{188.8}{0.40} = 472$ kg

This cement content has now to be checked against the minimum cement content required for mild exposure condition in reinforced concrete. The minimum cement content specified in Table 11.1 is 320 kg/m$^3$ from durability considerations. Therefore the value of 472 kg/m$^3$ is acceptable.

***Step 5:*** Now quantities of coarse and fine aggregates are worked out per m$^3$ of concrete as given below.

Volume of concrete = 1– 0.02 (entrapped air)
= 0.98 m$^3$
= 980 litres.

$$980 = 188.8 + \frac{472}{3.15} + \frac{f_a}{0.315 \times 2.66}$$

$$f_a = 537.39 \text{ kg}$$

Similarly,

$$980 = 188.8 + \frac{472}{3.15} + \frac{C_a}{(1 - 0.315) \times 2.72}$$

$$C_a = 1195 \text{ kg}$$

Therefore, the mix proportion becomes:

| *Cement* | *Water* | *Sand* | *Coarse aggregate* |
|---|---|---|---|
| 472 | 188.8 | 537.39 | 1195 |
| or 1 | 0.40 | 1.138 | 2.531 |

Adjustments required for water absorption:

Water absorbed by coarse aggregates

$$= \frac{1195 \times 0.5}{100} = 5.98 \text{ lit}$$

Free water in fine aggregate

$$= \frac{537.39 \times 2}{100} = 10.75 \text{ lit}$$

Therefore, actual quantity of water required

$$= 188.8 + 5.98 - 10.75 = 184.03 \text{ lit.}$$

Actual quantity of coarse aggregate = 1195 – 5.98 = 1189.02

and sand = 537.39 + 10.75 = 548.14

Therefore, the actual quantities of materials required are:

| *Cement* | *Water* | *Sand* | *Coarse* |
|---|---|---|---|
| 472 kg | 184.03 lit | 548.14 kg | 1189.02 kg. |

***Step 6:*** The fraction I and II of the coarse aggregates are to be now combined to give a combined grading in accordance with IS:383–1970 of 20 mm maximum size aggregate. To obtain a combined grading, IS: 383–1970 recommends that the fraction passing the 10 mm sieve shall be in the range of 25 to 55 per cent, or on an average of 40 per cent. Trials are then made to combine the fraction I and II in the proportion of, say 40:60 to see whether the combined grading is obtained. This is given below.

| *Is sieve designation* | *Fraction I, 10 mm MSA, 40 per cent* | *Fraction II, 20 mm MSA, 60 per cent* | *Combined grading* | *Desired grading 20-mm MSA, as per IS: 383* |
|---|---|---|---|---|
| 40-mm | 40 | 60 | 100 | 100 |
| 25-mm | 40 | 60 | 100 | 100 |
| 20-mm | 40 | 55.2 | 95.2 | 95 to 100 |
| 12.5-mm | 40 | 15 | 55 | - |
| 10-mm | 35.2 | 8.4 | 43.6 | 25 to 55 |
| 4.75-mm | 4.8 | 1.8 | 5.6 | 0 to 10 |
| 2.36-mm | 1.2 | – | 1.2 | - |

It can be observed that if the fractions I and II are combined in the ratio of 40:60 the desired combined grading as recommended in IS:383–1970 is obtained. The mix proportions for the trial mix will now be

| *Cement* | *Water* | *Sand* | *Coarse fraction I 10 mm MSA* | *Aggregate fraction II 20 mm MSA* |
|---|---|---|---|---|
| 472 | 184.03 | 537.39 | 475.6 | 713.41 |
| or, 1 | 0.391 | 1.138 | 1.007 | 1.51 |

## EXERCISES

1. Define concrete mix design and state the principle of mix design.
2. Concrete mix design is still very much a problem of trial and error. Comment!
3. What are the various grades of light and medium concrete? What information is required for mix design from the site of the work?

4. What is the minimum grade of concrete, to be used, specified by IS: 456–2000? How surface moisture of aggregates is accounted for in the mix design?
5. Discuss briefly the following with regards to mix design.
   (a) Workability
   (b) Strength
   (c) Durability
   Which one you consider to be of utmost importance? Give reasons.
6. What is the acceptance criteria of the concrete? Discuss briefly how the quality of concrete is controlled.
7. Define following
   (a) Target mean strength
   (b) Controlled concrete
   (c) Compacting factor
   (d) Aggregate-cement ratio
   (e) Water-cement ratio
8. Differentiate between
   (a) Preliminary and trial mixes
   (b) Medium and high strength concrete.
9. List the various methods of mix design. Briefly describe the IS code method.
10. Design a mix for the following data

| | |
|---|---|
| Characteristic compressive strength | 35 N / mm$^2$ |
| Size of aggregate | 20 mm, 10 mm |
| Shape of aggregate | angular |
| Compacting factor | 0.8 |
| Degree of quality control | good |
| Type of exposure | mild |
| Sp. gr. of cement | 3.15 |
| Sp. gr. of coarse aggregate | 2.70 |
| Sp. gr. of fine aggregate | 2.61 |
| Water absorption in (per cent) | |
| *Coarse aggregate* | 0.6 |
| *Fine aggregate* | 1.0 |
| Surface moisture (per cent) | |
| *Coarse aggregate* | nil |
| *Fine aggregate* | 1 |
| Cement | 43 grade |
| Sand conforming to | Zone III |

## OBJECTIVE TYPE QUESTIONS

1. To make one cubic meter of 1:2:4 by volume concrete, the volume of coarse aggregate required is
   (a) 0.94 $m^3$ (b) 0.85 $m^3$ (c) 0.75 $m^3$ (d) 0.65 $m^3$
2. If in a concrete mix the fineness modulus of coarse aggregate is 7.6, the fineness modulus of fine aggregate is 2.8 and the economical value of the fineness modulus of combined aggregate is 6.4, then the proportion of fine aggregate is
   (a) 25% (b) 33.33% (c) 50% (d) 66.67%

3. With the same w / c ratio, the lower the maximum size of aggregate the strength of concrete

| | |
|---|---|
| (a) increases | (b) decreases |
| (c) remains same | (d) can't say |

4. When the cement content and workability are kept constant, the greater proportion of fine aggregate will be required if
   (a) maximum size of aggregate is more
   (b) maximum size of aggregate is small
   (c) all in aggregate is used
   (d) rounded coarse aggregate is used
5. Pick out the incorrect statement.
   (a) To check segregation the sp. gr. of fine aggregate should not be more than that of coarse aggregate
   (b) When concrete is to be placed under water more fine aggregate is used to provide cohesiveness
   (c) For high workability fine aggregate required will be more
   (d) With small maximum size of coarse aggregate a small proportion of fine aggregate will be required
6. Following data is available in a mix design

*Coarse aggregate*

| | |
|---|---|
| Batch weight | 1350 kg / $m^3$ |
| Water absorption | 2% |

*Fine aggregate*

| | |
|---|---|
| Batch weight | 500 kg / $m^3$ |
| Water absorption | 0.5% |

The inference made from the above data is / are:
1. The quantity of coarse aggregate should be decreased by 27 kg.
2. The quantity of fine aggregate should be increased by 2.5 kg.
3. The quantity of mixing water per $m^3$ should be increased by 29.5 kg.

Of the above, the correct answer is
(a) 1, 2 and 3 (b) 1 and 2 (c) 2 and 3 (d) 1 and 3

7. The cement content in a mix design is 378 kg / $m^3$, water content 170 kg, sand is 30% of total aggregate, entrapped air is 1%, sp. gr of cement, coarse aggregate and fine aggregate are respectively 3.15, 2.70 and 2.60. The fine aggregate will be approximately
(a) 510 kg (b) 550 kg (c) 600 kg (d) 450 kg

## Answer Table

1. (b) 2. (b) 3. (a) 4. (b) 5. (d) 6. (d) 7. (b)

# 12

# Building Mortars

## 12.1 INTRODUCTION

Building mortars are mixtures used for the jointing of bricks, stones, blocks, etc. Mortar may be defined as a paste (capable of setting and hardening) obtained by adding water to a mixture of fine aggregates such as sand and binding material, e.g., clay, gypsum, lime or cement or their combinations. The pyramids of Egypt have been built with clay-gypsum, gypsum-lime and lime mortars. Indians have used lime mortar for monumental structures such as Taj Mahal and forts. In the years that followed, if was found that burning limestone with clayey substance produced hydraulic lime of high water-resistant properties. Lime with a still higher content of clay led to the manufacture of Roman cement. In 1824 Portland cement appeared; today it is considered to be the strongest binding material for making mortar.

The mortar composition is designed by the volume or weight of material in 1 m$^3$ of mortar or by the relative amount of materials with the amount of binding material taken as unity. For simple mortars composed of one kind of binding material and containing no mineral admixtures (e.g., cement mortar), the composition will be designated, say 1:4, i.e., one part (by weight or volume ) of binding material (cement) and 4 parts of sand. Combined mortar composed of two binding materials or combined mineral admixtures are identified by three figures, e.g., 1:0.4:5 (cement: clay: sand). Some of the important uses of mortars are as follows:

1. In brick and stone masonry—it is used in the vertical joints and is spread over each layer to give bed and a binding medium for successive layers of masonry.

2. In plastering and pointing—to cover exposed walls and joints to protect against weathering besides better appearance.
3. As matrix in concrete.

## 12.2 CLASSIFICATION

Mortars are classified on the basis of their bulk density, kind of binding material, applications and ,physical and mechanical properties.

### On the Basis of Bulk Density

| Type of Mortar | Bulk Density (kg / $m^3$) | Aggregate |
|---|---|---|
| Heavy weight | >1500 | Heavy quartz or sand |
| Light weight | <1500 | Light porous sand from pumice, tuffa, slags, etc. |

### On the Basis of Binding Material

The governing factors in deciding a particular type of mortar for a specific structure depends upon the desired strength of masonry, resistance to penetration of rain water, immediate and long term appearance, hardening temperature, expected working conditions of the building and cost.

For most practical purposes a building mortar will fall in one of the following classes:

***Cement Mortars*** are prepared from Portland cement or its varieties, sand and water.

***Lime Mortars*** are mixture of air hardening lime or hydraulic lime, sand and water.

***Gypsum Mortars*** are prepared from gypsums or anhydride binding materials.

***Mud Mortars*** are prepared from clay nodules and are used in construction of houses for poor and temporary construction works.

***Composite Mortars*** may be surkhi-motar (surkhi, lime and water), lime-surkhi-sand mortar, cement-lime mortar and cement-clay mortar.

### On the Basis of Application

***Brick Laying Motars*** are intended for brick work.

***Finishing Mortars*** are intendend for architectural or ornamental parts , application of decorative layers on walls and panels.

***Special Mortars*** are intended for acoustics, X-ray shielding, plugging concrete at oil fields, etc.

### On the Basis of Physical and Mechanical Properties

The basis of this classification is the strength of concrete which underlies the durability of concrete. Building mortars are subdivided into nine grades on the basis of compressive strength from 0.4 to 30.0N / $mm^2$.

## 12.3 CHARACTERISTICS OF GOOD MORTAR

The chief properties of hardened mortar are strength, development of good bond with building units, resistance to weathering and those of green mortar mixes are mobility, placability and water retention. In addition, the mortar should be cheap and durable and should not affect the durability of building units in contact. The joints made with mortar should not develop cracks.

### Strength

The strength of masonry depends upon both the mortar and the building unit (brick, stone or block). A very strong mortar with weak building units will be of little use. It is also important to consider whether full strength is required within a short time. In cold weather, when the strength of lime or cement mixes develops slowly, this is likely to affect the choice of mix. Strong cement mortars are most likely to lead to shrinkage cracks, and should, therefore be avoided except where high strength is an essential requirement. On the other hand the use of much weaker mortar say, 1:10 cement mortar is not satisfactory since reduction in cement content leads to less workability, less cohesion and will produce porous joints of low frost resistance. Strength of hardened mortar depends on the activity of binding materials, the water-cement ratio, consumption of binding material and the quality of sand. It has been found that:

1. The density and strength of mortars made of the same class of aggregate decrease as the proportion of fine aggregate is increased.
2. It requires about twice as much cement to produce a mortar of given strength when fine sand is used as it does with coarse sand.
3. When the percentage of mixing water is increased beyond that required to form a placeable mix, the density and strength of mortar reduces. The proportionate effect is greatest at the early ages.
4. Even small percentage of mica if present considerably lowers the tensile strength and adversely affects the compressive strength.
5. There is a loss of compressive strength by the replacement of less than 25 per cent of cement by hydrated lime.
6. Cement lime mortars are helpful in autogenous healing of cracks.

### Resistance to Penetration of rain

The mortar for plastering should protect the masonry joints and units by forming an impermeable sheet. A satisfactory bond between the building units, mortar and plaster should be ensured.

### Mobility and Placeability

The term mobility is used to indicate the consistency of mortar. The placeability is the ease with which the mortar mix can be applied with a minimum cost in a thin and uniform layer on the surface. Depending on its composition a mortar may have a consistency ranging from stiff to fluid. Mortars for masonry, finishes and other works are made sufficiently mobile. The mobility of mortar mix determines its placability. Mortars prepared from Portland cement alone are frequently deficient in cement paste, stiff and non-placeable and often plasticizers are added.

### Water Retention

It is characterized by the ability of mortar not to stratify during transportation and to retain adequate humidity in a thin layer spread over a porous bed. A mortar mix of low water retention will show the defects after hardening. Mortar may lose so much water that the amount left may be insufficient for its hardening and required strength. Mineral and organic plasticizing agents may be added to enhance water retention.

## 12.4 FUNCTIONS OF INGREDIENTS

Cement, lime and clay used as binding materials impart adhesive power and strength.

Sand is an adultrant, but increases the crushing strength of mortar and reduces shrinkage. When used in lime mortar, it assists the hardening of fat lime by allowing air to penetrate providing carbon dioxide for carbonisation.

Surkhi is used for economy and for furnishing hydraulic properties to lime mortar.

Flyash and cinders are used in lime mortar as fine aggregate in place of surkhi.

Molasses or gur is mixed with fat lime mortar; solubility of lime is increased and it readily crystallises. Consequently the mortar solidifies easily. One part of molasses is used with 80 parts by weight of water used for mixing the fat lime.

Water in mortar lubricates the surfaces of aggregate, spreads the binding material uniformly so that it can fill the pores in the fine aggregate and cause hydration of cement and hydraulic lime. The pH value of water used should not be less than 6.

## 12.5 CEMENT MORTAR

Cement mortar can be prepared by mixing cement, sand and water in desired proportions. Portland cement and blast furnace slag cement form excellent mortars for walls built with bricks, stones and large blocks. Puzzolana Portland cement and sulphate-resisting cement form mortar which are used for constructions exposed to aggressive and waste waters. Cement mortars are used for plastering, rendering smooth finishes and damp proof courses.

The mix proportions of cement mortar are given in Table 12.1.

**Table 12.1 Mix Proportions**

| *S.No.* | *Type of Work* | | *Cement* | *Sand* |
|---|---|---|---|---|
| 1. | Masonry | | 1 | 4-5 |
| 2. | Plastering | (a) Interior | 1 | 4 |
| | | (b) Exterior | 1 | 5-6 |
| 3. | Pointing | | 1 | 1-3 |
| 4. | Reinforced brick work | | 1 | 3 |
| 5. | Foundation | | 1 | 3-4 |

***Preparation*** Small quantities of mortar are mixed manually; mechanical mixers may be used for large quantities.

For *manual mixing,* sand is sieved, cleaned with water to remove dirt and dust and dried. This dry sand is laid uniformly, on a pucca platform, over which cement is uniformly spread. The whole mass is then thoroughly mixed with spades till it becomes uniform in colour. A depression is then made in the middle of the mix and required quantity of water is added. The dry mix from the sides is moved and placed on the edges of the depression formed till the water is completely absorbed by the mix. The wet mix is then worked with spades to give a uniform consistency to the mortar.

For *mechanical mixing* the calculated quantity of cement, sand and water are fed into the cylindrical container of the mixer. A rotar with blades, inside the container, rotates and thoroughly mixes the ingredients. A typical Turbulent mixer is shown in Fig.12.1.

***Precautions*** Cement mortar should be of uniform and workable consistency. It should be consumed within 30 minutes from the instant of adding water to the mix. The bricks, stones and blocks should be fully saturated in water before laying. The masonry and plastered or pointed surface should be kept completely wet by sprinkling water for at least 7 days.

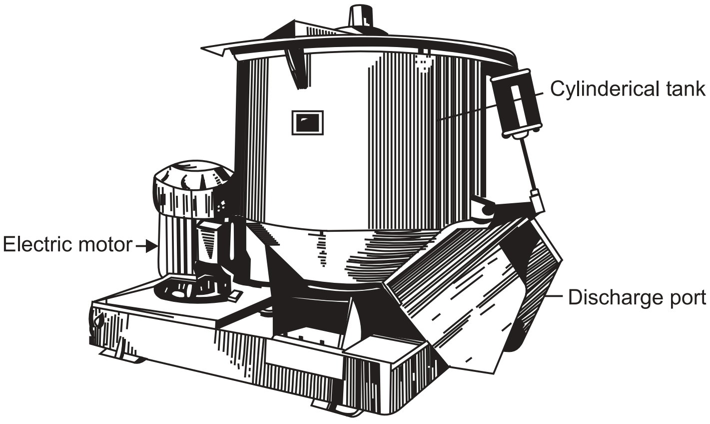

**Fig. 12.1 Turbulent Mortar Mixer**

***Effect of Alkali Waters and Sea Water on Cement Motar*** Neat cement paste may disintegrate by the combined chemical and mechanical action of waters containing salts. The sulphates and chlorides are chemically active and remove lime from the cement. The carbonate of soda alone or in sloution with sodium chloride or sodium sulphate withdraws silica. Under the conditions of alternate wetting and drying this process is accelerated. Crystals of large sizes are formed and expansive forces are produced which disintegrate the neat cement paste. This effect is less pronounced in lean mortars.

***Effect of Oil and Acids on Cement Mortar*** Well-cured cement mortars are not affected by oils. Lean mortars may develop less strength after 7 days when partially immersed in oil than when moist-cured for a month prior to immersion. The mortar surfaces soaked with oil show a marked reduction in abrasive resistance. When mineral oils are incorporated in the mixing water they retard the set of cement and reduce strength.

Animal and vegetable oils attack the lime compounds in the cement and form lime soap causing disintegration. Therefore, only mineral oils should be used for lubricating moulds.

For pH value less than 7 water removes the lime from cement in proportion to the decrease in the pH number and consequently the strength is reduced.

***Effect of Sugar on Cement Mortar*** Up to 0.15 per cent of sugar added to cement delays the setting time and destroys the early strength. However, when added up to 2 per cent, it increases the strength at an age of 2 to 3 months. The action of sugar is attributed to the formation of a soluble calcium saccharate ($C_{12}H_{22}O_{11}.CaO + 2H_2O$)

***Effect of Low and High Temperatures on Cement Mortar*** The rate of setting of cement falls for temperature falling below $4.5^\circ C$. When the temperature falls below freezing the particles of cement in unset cement paste separate by the expansion of water. Alterations in freezing and thawing before set break the bond between cement particles and consequently there is loss of power. If binding cement freezes before setting but thaws without refreezing, it achieves half the normal strength under proper curing.

Considerable chemical activity is noticed in neat cement paste when setting at$-18^\circ C$. At such low temperatures neat cement paste gains strength at a very slow rate but develops a high proportion of its normal value after several years. Cement paste hardening at room temperatures attains higher strength than when allowed to harden for a like period after exposure to freezing temperatures.

***Effect of Premixing and Retempering Cement Mortar*** Only half of the cement grains are hydrated by water in ordinary cement paste. The powder obtained by crushing and grinding neat cement briquettes has cementitious properties, and briquettes made after a second regrinding possess a low strength. The strength is found to reduce in proportion to the increase in water-cement ratio caused by retempering.

## 12.6 LIME MORTAR

Lime mortar is made by mixing lime, sand and water. Lime used for mortar may be fat lime (quick or hydrated lime) or hydraulic lime. *Fat lime* has high calcium oxide content. Its hardening depends on loss of water and absorption of carbon dioxide from the atmosphere and possible recrystallisation in due course. *Hydraulic lime* contains silica, alumina and iron oxide in small quantities. When mixed with water it forms putty or mortar having the property of setting and hardening under water.

Slaked fat lime is used to prepare mortar for plastering, while hydraulic lime is used for masonry construction and are most suitable for construction of chimneys and lightly loaded superstructure of buildings. The mix proportions of lime mortar for various types of works are given in Table 12.2.

**Table 12.2 Mix Proportions**

| *S.No.* | *Type of lime* | *Lime* | *Sand* | *Fineness modulus of sand* | *Type of work* |
|---|---|---|---|---|---|
| 1. | Fat Lime | 1-2 | 2-3 | 2-3 | Plastering |
| | | 1.5 | 2-3 | 2-3 | Pointing |
| 2. | Hydraulic | 2-3 | 1.5-2.5 | 1.5-2.5 | Masonry |

***Notes:*** **1. Sand in lime mortar is an adulterant, and reduces its shrinkage. Lime mortar becomes porous allowing air to penetrate and helps the mortar in hardening.**

**2. Lime mortar is not suitable for water-logged areas and damp situations.**

Lime mortars have plasticity and placability, good cohesion with other surfacings and little shrinkage. They harden and develop strength very slowly continuously gaining strength over long period. Fat lime mortars do not set but stiffen only as water is lost by absorption (by masonry units) and evaporation. The gain in strength is a very slow reaction of lime with carbon dioxide absorbed from air.

### Preparation

*Manual Mixing* Lime and sand in required quantities are placed on an impervious floor or in a tank (Fig. 12. 2). The constituents are thoroughly mixed dry by turning them up and down with spades. Water is added and mixing is done again with spades till mortar of uniform colour and consistency is obtained.

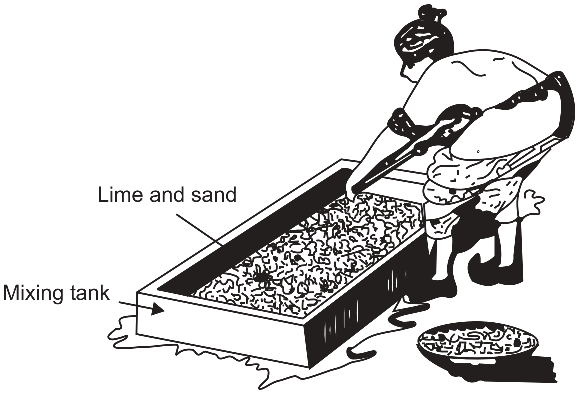

**Fig. 12.2 Manual Mixing**

*Mill Mixing* Mills used for preparing lime mortars in undeveloped countries may be a *chakki or ghanni* run by bullocks (Fig. 12.3) while a pan mill (Fig. 12.4) is used in developed countries. In the case of ghanni the required quantity of ingredients in the form of putty is put in the trench and grinding for 100 to 200 revolutions is carried out by moving stone roller. The operation takes about 2 to 3 hours for each batch of mix; the time required in a Pan mill is much less.

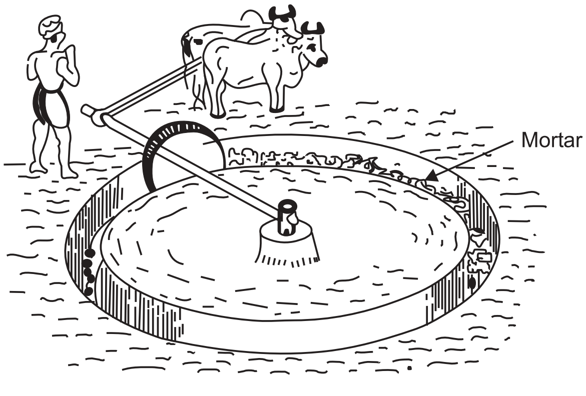

**Fig. 12.3 Bullock Driven Mortar Mill (Ghanni)**

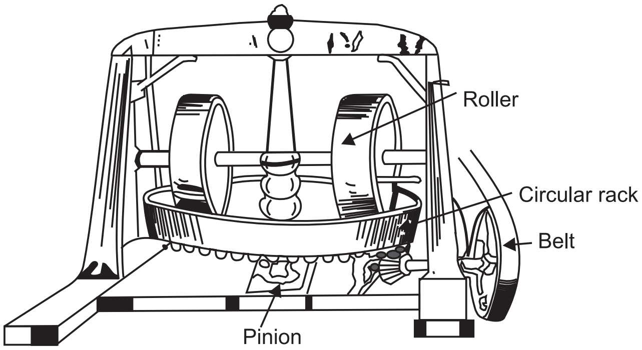

**Fig. 12.4 Power Driven Mortor Mill (Pan Mill)**

***Precautions*** Lime mortar or putty should be kept moist till use and in no case its drying is allowed. The mortar made of hydraulic lime should be consumed within one day and that with fat lime within 2-3 days.

## 12.7 SURKHI MORTAR

It is prepared in the same way as lime mortar, with surkhi replacing sand. Surkhi should be ground to pass through 4.75 mm sieve and about less than 15 per cent through 150 micron sieve. Sand is also mixed sometimes. The mix proportions of surkhi mortar are given in Table 12.3.

**Table 12.3 Mix Proportions**

| *S.No* | *Type of Mortar* | *Lime* | *Surkhi* | *Sand* | *Type of work* |
|---|---|---|---|---|---|
| 1. | Surkhi | 1 | 2 | - | Masonry and foundation |
| 2. | Lime-surkhi | 1 | 1 | 1 | Masonry and foundation |

## 12.8 LIME-CEMENT MORTAR

Also known as *guarded mortar or gauged mortar* is made by mixing cement and lime. The advantages of lime-cement mortar are increased water retentivity, workability, bonding properties and frost resistance. The mortar gives good and smooth plaster finish and is used in buildings.

***Preparation:*** For low lime content, cement and sand are first mixed dry. Lime putty is dissolved in water and added to the dry mix. The mix is then worked thoroughly with spades till uniform consistency is obtained. For high lime content lime cement mortar is made in the mills; lime and sand are first mixed separately in the form of paste for the entire day's requirement. Then cement is mixed with lime mortar in batches to be consumed in an hours time. The mix proportions of lime-cement mortar are given in Table 12.4.

**Table 12.4 Mix Proportions**

| *S.No.* | *Location* | *Ratio (by volume)* | | |
|---|---|---|---|---|
| | | *Cement* | *Lime* | *Sand* |
| 1. | Outside wall | 1 | 1 | 6 |
| | | 1 | 2 | 9 |
| 2. | Inside wall | 1 | 2 | 9 |
| | | 1 | 3 | 12 |

## 12.9 MUD MORTAR

They are the cheapest type of mortar prepared with locally available ingredients and are used for masonry works, surfacing floors and plastering wall surfaces in low cost houses. To improve resistance to rain water, the plastered surfaces are sometimes sprayed with bituminous material.

***Preparation*** The top 150 to 200 mm layer of earth is removed and the clay nodules dug from the ground are wetted and allowed to mature for a day or two. Some fibrous material such as cow dung is added which prevents the shrinkage cracks. The ingredients are then kneaded well and mixed thoroughly.

*Note:* **Sometimes clay is added to cement mortar to increase its workability. The grain composition and the water retaining ability of mortar also increases. However, cement-clay proportion should not exceed 1:1. These mortars show high frost resistance and better strength than cement-sand mortar.**

## 12.10 SPECIAL MORTARS

Some of the mortars intended for use under special circumstances are as follows:

***Mortars for Filling Joints between Prefabricated Reinforced Concrete Components*** are prepared with Portland cement and quartz sand with a mobility of 70 to 80 mm. The grade of the mortar should be same as that of the concrete and in no case less than M-10.

Cement-sand and cement paste injection mortars intended for filling grooves inside prestressed concrete components should have a grade not less than M-40 grade or more is preferred. Sulphite-alcohol vinasse or naphetene soap is added in amounts up to 0.2 per cent of the weight of cement to reduce viscosity.

***Packing Mortars*** used for packing oil wells these mortars may be of cement-sand, cement-loam and cement-sand-loam. Slag Portland cement, puzzolana and sulphate resisting cements are used for aggressive water and packing Portland cement when water pressure is expected. These mortars should have high homogeneity, water resistance, predetermined setting time, adequate water yield under pressure and ability to form soil water-proof plugs in cracks and voids of rocks. Cement-sand-loam mortar with 5 per cent calcium chloride is especially suitable for tunnelling.

***Damp-proofing Mortars*** are prepared using high grade sulphate-resisting Portland cement or sulphate-resisting puzzolana cement as binding material and quartz sand or sand from crushed solid rock. An approximate composition of the mortar is 1:2.5 or 1:3.5. Water proof seams and joints are made from damp-proofing mortars prepared with expanding cement.

***Sound-absorbing Mortars*** are prepared with Portland cement, slag cement, lime or gypsum as binding material, caustic magnesite and single-size fraction sand (3.5 mm) from light weight porous materials such as pumice, cinders, ceramsite, etc. They have a bulk density of 600-1200 kg/m$^3$ and used as sound absording plaster to reduce the noise level.

***Fire-shielding Motars*** are used for setting refractory bricks in the furnace linings where the temperature is too high for ordinary mortars. Aluminous cements and finely powdered fire bricks in the ratio 1:2 give excellent fire resisting mortars. Its trade name is Accoset 50.

***X-ray Shielding Mortars*** Heavy mortars of bulk density over 2200 kg/m$^3$ are required for plastering walls and ceilings of X-ray cabinets. The binding materials are Portland cement and slag cement, and the aggregates are from heavy rocks in the form of sand (up to 1.25 mm) and dust. Admixtures containing light weight elements (hydrogen, lithium, cadmium) are added to enhance the protective properties.

## 12.11 SELECTION OF MORTAR

The particular type of mortar to be used for construction works are given in Table 12.5.

**Table 12.5 Selection of Mortars**

| *No.* | *Nature of work* | *Type of mortar* | *Proportions* |
|---|---|---|---|
| 1. | Construction work in water logged areas and exposed positions | Cement or lime mortar lime being eminently hydraulic lime | 1:3 |
| 2. | Damp-proof courses and cement concrete roads | Cement mortar | 1:2 |
| 3. | General R.C.C. work such as lintels, columns, slabs, stairs, etc. | Cement mortar, the concrete mix being 1:2:4. | 1:3 |
| 4. | Internal walls and surfaces of less importance | Lime cinder mortar. Sand is replaced by ashes or cinder, | 1:3 |
| 5. | Mortar for laying fire-bricks | Fire-resisting mortar | 1 part of aluminous cement to 2 part of finely crushed powder of fire-bricks. |
| 6. | Partition walls and parapet walls | Cement mortar<br>Lime mortar prop. 1:1. Lime should be moderately hydraulic lime. | 1:3 |
| 7. | Plaster work | Cement mortar<br>Lime mortar | 1:3 to 1:4<br>1:2. |
| 8. | Pointing work | Cement mortar | 1:1 to 1:2 |
| 9. | Reinforced brickwork | Cement mortar | 1:3 |
| 10. | Stone masonry with best varieties of stones | Lime mortar<br>Lime being eminently hydraulic lime. | 1:2 |
| 11. | Stone masonry with ordinary stones, brickwork, foundations, etc. | Lime mortar<br>Cement mortar<br>Lime should be eminently hydraulic lime or moderately hydraulic lime. | 1:2<br>1:6. |
| 12. | Thin joints in brickwork | Lime mortar<br>Lime being fat lime. | 1:3 |

## 12.12 TESTING

The motars are tested for their quality by the crushing strength, soundness, and initial and final setting time tests as discussed in Sec.5.9. The crushing strength of some of the mortars is given in Table 12.6.

**Table 12.6 Permissible Strength of Brick Masonry**

| S.No. | Type of Mortar | Mix portion | Permissible strength ($N/mm^2$) |
|---|---|---|---|
| 1. | Cement | 1:3 | 0.75 |
| 2. | Cement | 1:6 | 0.45 |
| 3. | Lime | 1:3 | 0:45 |
| 4. | Cement-lime | 1:1:6 or 1:1:9 | 0.50 |

Besides the strength tests of mortar, another test, the permeability test of mortars is of utmost importance from durability consideration. The principal objective in permeability testing is to find the water tightness of the concrete. However, such tests often have little direct relation to the imperviousness of the structure due to presence of cracks and joints. On the other hand, the test is useful in determining the corrosive effect of percolating water which leach out the free lime and gradually attack the lime in the tribalism silicate. It can also be used to measure the relative efficiencies of cements and their rates of hydration. Following is the IS code, method of detraining permeability of mortars and concretes.

## Permeability Test

The permeability of cement mortar and concrete specimens, of diameter as given in Table 12.7, are either cast in laboratory or obtained by core cutting of existing structural element is determined to asses the durability of the mortar or concrete used. The mortar or concrete mix is cast in the split moulds of required size. The material is compacted in a manner similar to as proposed during contruction. The mould is struck off level, carefully. The specimen is cured for 28 days. The test is preferably carried out at temperature of 27 ± 2°C. Typical details of the cell and the test arrangement are shown in Fig.12.5.

**Table 12.7 Dimension of cell and specimen**

| Specimen Diameter | Dimension of Cell, mm | | |
|---|---|---|---|
| mm | A | B | C |
| 100 | 115 | 80 | 110 |
| 150 | 170 | 120 | 160 |
| 300 | 330 | 260 | 320 |

The specimen is thoroughly cleaned with a stiff wire brush to remve all the laitance. The end surfaces are then sand blasted or lightly chiselled. The system is completely filled with water and the desired pressure is applied to the water reservoir and the initial reading of the gauge-glass recorded.

The specimen is subjected to a standard test pressure of $1N/mm^2$, but may be reduced to $0.5N/mm^2$ for relatively more permeable specimens and increased up to $1.5N/mm^2$ for relatively less permeable specimen, from one side. At the same time a clean collection bottle is weighed and placed in position to collect the water percolating through the specimen. The quantity of percolate and the gauge reading is recorded at periodic intervals.

As the steady flow is approached, the two rates tend to become equal and the outflow become maximum and stabilizes. The test is continued for 100 hours after the steady state of

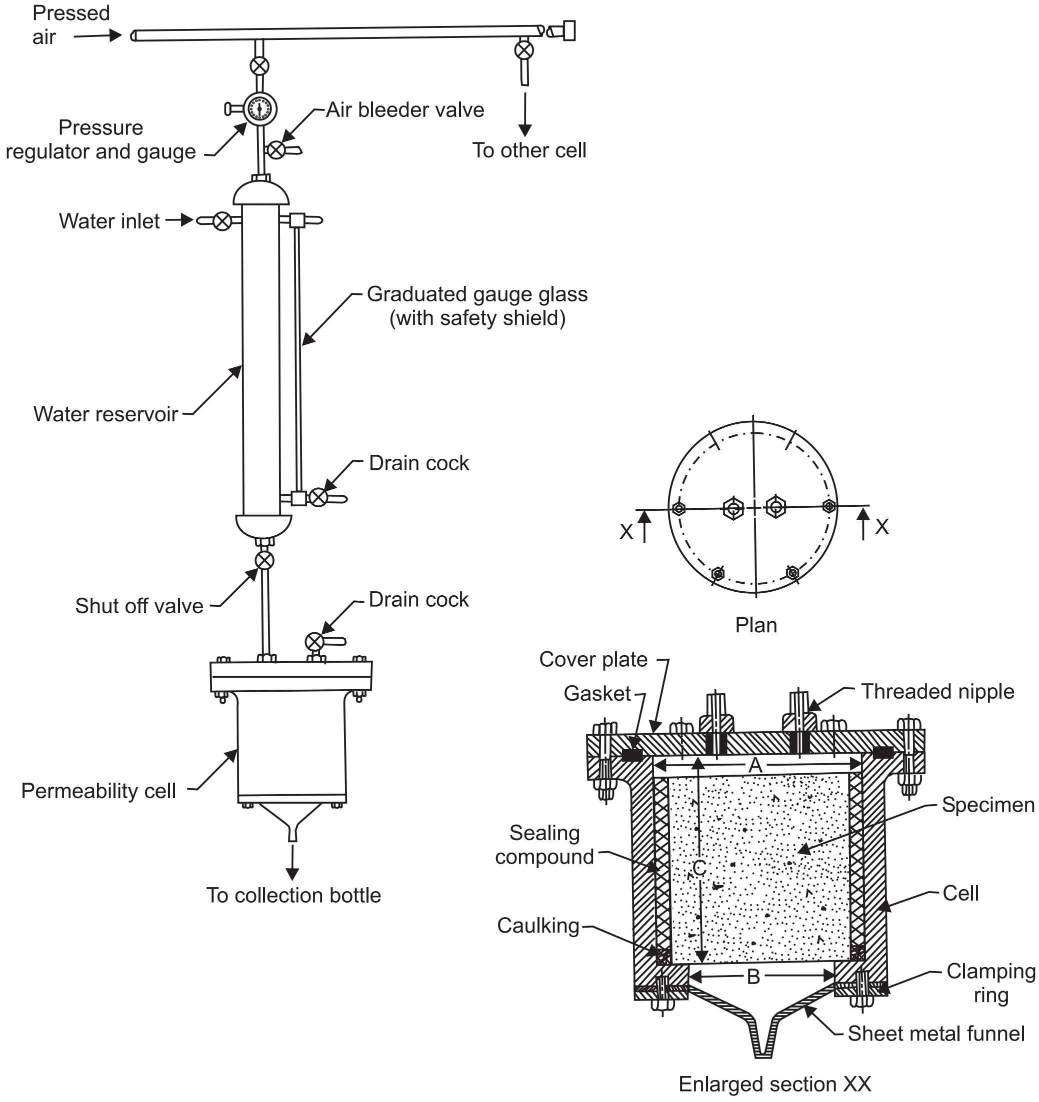

**Fig. 12.5 Permeability Test Set-Up (Schematic)**

flow has been reached and the out flow is considered as average of all the out flows measured during this period of 100 hours.

The quantity of water percolating through it during a given interval of time is measured and the coefficient of permeability (*k*) is calculated.

$$k = \frac{Q}{AT(H/L)}$$

where, $Q$ is the quantity of water (ml) percolating over the entire period of the test after the steady state has been reached; $A$ is the area of specimen face in $\text{cm}^2$; $T$ is the time in seconds over which $Q$ is measured; and $H/L$ is the ratio of pressure head to thickness of specimen.

## 12.13 GROUT

Cement mortar of fluid consistency used to fill the voids and joints in masonry and to repair the cracks is known as grout. Also used to increase the bearing capacity of soil by injection. Grout finds extensive use in dams—to fill the cracks formed after the concrete sets and hardens; spaces between tunnel walls and the surrounding earth—to spread the earth stresses uniformly over the structures and; hollw concrete blocks—to develop bond between steel reinforcement and concrete.

Grout differs from mortar in its fluidity as it is to be poured and not spread into place with trowel. It is essentially composed of cement, fine or coarse sand, water, and a small amount (if any) of grouting admixture . The water-cement ratio should be kept as low as possible to increase the strength and reduce the shrinkage. This may necessitate use of admixtures, e.g., accelerators, retarders, gas forming and workability agents. Accelerators such as calcium chloride or triethanolamine are used to reduce the setting time in situations where plugging effect is desired. When the grout is to be pumped, the retarders or gas forming agents like mucic acid, gypsum are used. Gas forming agents, e.g., aluminium powder is used while grouting in confined areas as under the base of a machine. Workability agents like flyash, bentonite clay, diatomaceous earth, etc. are used as water reducing admixtures.

For wide cracks the grout is poured under pressure or pumped in the cracks. After the crack is filled, pressure is maintained for a few minutes to ensure saticfactory penetration. For finer cracks, chemicals grouts are used. These consist of solution of two or more chemicals forming a gel or precipitate and can be successfully used even in the moist environment. The properties of cement grout are given as follows:

| | | |
|---|---|---|
| 1. | Compressive strength | 20-7 N / mm$^2$ |
| 2. | Elastic modulus (compression) | 20-30 GPa (IGPa=10$^3$ N / mm$^2$) |
| 3. | Tensile strength | 1.5-3.5N / mm$^2$ |
| 4. | Flexral strength | 2-5N / mm$^2$ |
| 5. | Linear coefficient of thermal expansion | (7-12) × 10$^{-6}$ / C |
| 6. | Water absorption (7 days) | 5-12 % |
| 7. | Development of strength | 7-28 days |

## 12.14 GUNITING

The application of mortar or concrete under pneumatic pressure through a cement gun is known as guniting; concrete becomes extremely strong and a high bond is achieved.

The gunite may be defined as mortar comprising cement and sand conveyed through an equipment known as gun. It is pneumatically forced, on a backing surface, through a nozzle where water is added at a high velocity. The mix leaving the nozzle at a high velocity strikes the surface to be repaired or protected. In the process the coarser particles rebound from the surface and leave an excellent bond coat of fine grout in intimate contact with the backing surface. In the process a thin layer of grout builds up and acts like a cushion reducing the percentage rebound in the successive layers. The composition of the material deposited on the backing surface has been found to be different from that of the mix leaving the gun because of more of the coarse materials in the rebound material. Table 12.8 gives the proportions in place for various mixes for optimum nozzle velocity.

**Table 12.8 Proportion of Gunite Mixes**

| *Nominal mix placed in the gun Cement: Sand* | *Mix in place Cement: Sand* |
|---|---|
| 1 : 3 | 1 : 2.0 |
| 1 : 3.5 | 1 : 2.8 |
| 1 : 4.0 | 1 : 3.1 |
| 1 : 4.5 | 1 : 3.3 |
| 1 : 5.0 | 1 : 3.6 |
| 1 : 6.0 | 1 : 4.1 |

In the application of gunite rebound becomes the most important consideration as it affects the economy. Approximate values of rebound for different working conditions are listed below:

| | |
|---|---|
| Basements | 30% |
| Vertical walls | 40% |
| Overhead slabs | 50% |
| Beam sides and bottoms | 55% |
| Columns | 65% |

The impact caused by the jet force compacts the material. A comparatively dry mix is preferred for guniting as the material will support itself without sagging even for vertical and overhead applications. The guniting is done in layers of 40-50 mm. After the first layer is applied and has set initially, all the loose material and laitance is removed by hammer to locate dummy areas resulting from lack of bond or rebound pockets. These pockets are cut and replaced during placing of the next layer. A good well compacted gunite cured for 28 days gives a compressive strength as high as 42 N/mm$^2$. The average unit weight of gunite is 2300 kg/m$^3$. Curing is done for seven days.

***Uses*** Gunite can be employed for construction of thin section, e.g., folded plates, shells and thin walls; linings for tunnels and swimming pools; repairing of deteriorated concrete damaged by fire, earthquake, chemicals and in hydraulic structures; strengthening buildings, bridges and jetties; stabilizing rocks and earth slopes; protective coatings over prestressing wires and steel pipes and; to furnish rough surface texture form architectural point of view. Pneumatic guniting is also used for refractory castables.

### *Precautions*

1. If the air or water pressure fluctuates a certain amount of a too dry or a too wet mix will be applied leaving a spotty appearance. The water pressure should be kept 0.45-0.675 N/mm$^2$ higher than air pressure.
2. The backing surface should be thoroughly cleaned. For concrete and masonry surfaces cleaning is followed by wetting and damp drying.
3. The guniting should start from the bottom for walls. The first gunite layer should embed the reinforcement completely. The distance of the nozzle from the backing surface should be 0.6-15m.

4. The nozzle velocity should not be more than 140 m/s. At higher velocities the material particles in the nozzle interfere with rebound material and result in a porous mass of lower strength.
5. The thickness of gunite should not be less than 40 mm for repairing of structures.
6. The rebound material should not be reused.

## EXERCISES

1. What is mortar? Briefly describe the various types of mortars.
2. (a) Describe the process of making lime mortar.
   (b) State the functions of sand in mortar.
   (c) What proportions of mortar will you recommend in the following cases:
   1. Lime concrete in foundation, 2. Brick work in foundation.
3. (a) What are the functions of sand, surkhi and water in mortar?
   (b) Under what conditions will you recommend cement mortar over lime mortar for masonry.
   (c) What is the effect of clay in mortar?
4. (a) Describe briefly the method of preparing lime mortar.
   (b) Why are lime mortars ground and why cement mortars are not ground?
   (c) How can mortar be made water proof?
5. What are the different types of mortars used for engineering works?
   State the composition and function of each.
6. (a) What are the advantages of adding surkhi to lime mortar?
   (b) Describe the procedure of preparing cement mortar.
   (c) What are the precautions to be exercised while using mortars?
7. What do you understand by
   (a) Grout (b) Gauged mortar (c) Guniting
8. Give the reasons:
   (a) Why are bricks and stones soaked with water before they are laid in cement mortar?
   (b) Why are molasses used in mortar?
   (c) Why is sand added to mortar?
   (d) Why is puzzolana added to mortar?
   (e) Why is it necessary to cure mortar?
9. Write short notes on:
   (a) Lime mortar (b) Lime-surkhi mortar
10. (a) What are the essential properties of lime mortar?
    (b) How and why the grinding of lime mortar is done?
    (c) State the tests conducted for quality acceptance of mortars.
11. What types of mortars will you recommend under the following situations? Give reasons for your selection. Also write the proportions of the ingredients:
    (a) Masonry in foundation (b) Plastering: interior of a house
    (c) Foundation work
12. Enlist the tests carried out to check the quality of mortars. How is permeability of cement mortar determined?

## OBJECTIVE TYPE QUESTIONS

1. Which of the following mortars is most suitable for construction work in water-logged areas?
   (a) Lime mortar (b) Gauged mortar (c) Cement mortar (d) Mud mortar
2. After addition of cement, the gauged mortar should be used whithin
   (a) 30 minutes (b) 1-2 hours (c) 8-10 hours (d) 24 hours
3. A gauged mortar is obtained by adding which of the following ingredients to cement?
   (a) Sand stone (b) Sand and surkhi (c) Sand and lime (d) Surkhi alone
4. Lime mortar is generally made with
   (a) quick lime (b) fat lime (c) hydraulic lime (d) white lime
5. Match List-I with List-II and select the correct answer using the codes given below the lists:

| *List-I*<br>(Cement mortar for different works) | *List-II*<br>(Proportion of cement: sand in mortar) |
|---|---|
| A. Normal brick work | 1. 1:4 |
| B. Plastering work | 2. 1:3 |
| C. Grouting the cavernous rocks | 3. 1:6 |
| D. Guniting | 4. 1:1.5 |

*Codes:*

(a) A B C D
1 2 3 4

(b) A B C d
3 1 2 4

(c) A B C D
3 1 4 2

(d) A B C D
4 3 2 1

6. One of the main demerits in using the lime mortar is that it
   (a) is not durable (b) does not set quickly
   (c) swells (d) is plastic

### Answer Table

1. (c) 2. (b) 3. (c) 4. (c) 5. (c) 6. (b)

# 13

# Ferrous Metals

## 13.1 INTRODUCTION

Metals are aiming the most useful building materials. They exist in nature as compounds like oxides, carbonates, sulphides and phosphates and are known as ores. Metals are derived from ores by removing the impurities. Those used for engineering purposes are classified as ferrous metals, with iron as the main constituent, e.g. cast iron, wrought iron and steel and others like aluminium, copper, zinc, lead and tin in which the main constituent is not iron as non ferrous metals.

## 13.2 STRUCTURES OF FERROUS METAL

Iron is a pure element occurring in four different allotropic structures as alpha, beta, delta, and gamma iron. $\alpha$-iron is weak and ductile, possesses magnetic properties and is unable to dissolve carbon. $\beta$-iron is hard, brittle, non-magnetic and dissolves carbon. $v$-iron has properties similar to $\beta$-iron. $\delta$-iron absorbs negligible carbon and is non-magnetic. Of these the common commercial forms are gamma iron with its fcc (face-centered cubic) structure formed at temperatures from 1394°C to 912°C, and alpha iron which has bcc (body-centered cubic) structure formed at temperatures from 912°C to 273°C. The delta form is commercially unimportant. Gamma iron containing carbon, is called austenitic and alpha iron containing carbon, is called ferritic. The other steel alloys having same gamma structures are also called austenitic. Similarly alloys having alpha structure are called ferritic.

Even the closed-packed metallic structures contain empty spaces (holes), assume atoms to be spherical. About 26 per cent of the volume is empty in the fcc metallic structures and about 29 per cent of the bcc volume is empty. The holes in the gamma iron are nearly half the diameter of the carbon atom, causing the solubility of carbon to be practically zero in austenite iron. However, in alpha iron the holes are comparable to the size of carbon atom, allowing an interstitial solubility of about 2 per cent carbon austenite iron. Thus the number of available spaces and the relative size of carbon atom limits the amount of latter to dissolve in the solid solutions and form the useful kinds of carbon alloys.

## 13.3 IRON

Iron is by for the most important of the metals used in engineering construction. It is available in abundance, but does not occur freely in nature. The ores of iron are classed according to the iron mineral which is predominant. The iron content of the main ores are as follows:

Magnetite ($Fe_3O_4$) — 70–75%,
Haematite ($Fe_2O_3$) — 70%,
Limonite ($2Fe_3O_3.3H_2O$) — 60%, it is hydrated haematite,
Iron pyrite ($FeS_3$) — 47%, and
Siderite ($FeCO_3$) — 40%

The fundamental chemical principles in the extraction of iron from the ores is very simple. Heating the ores in the presence of a reducing agent will result in the formation of CO or $CO_2$, librated as a gas, and metallic iron. Iron owes its greatest utility to the fact that it alloys freely with other elements, and its inherent properties are markedly altered and improved for varying conditions of service.

## 13.4 PIG IRON

The iron ore is dressed by crushing it to about 50 mm cubes. The impurities are knocked off and the ore is then calcined to drive off moisture. The calcined ore is smelted in blast furnance (Fig. 13.1). The iron is deoxidised and a part of sulphur is also removed. Then limestone, which acts as flux*, is added to finally remove the sulphur. The molten metal is tapped from the furnance and is cast in the form of pigs.

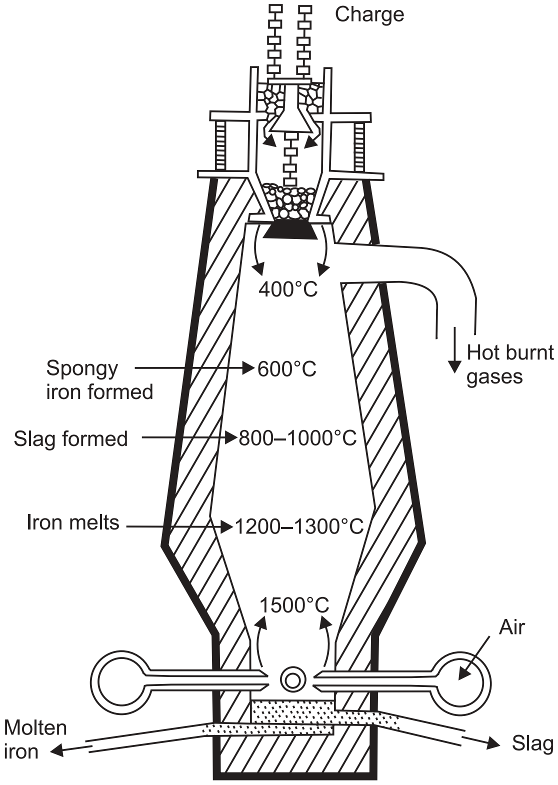

**Fig. 13.1 Blast Furnace for the Manufacture of Pig Iron**

### Classification

Pig iron is classified as Bessemer pig, foundry pig, forge pig, and mottled pig.

---

* *Flux* is *a mineral substance charged into blast fumance to lower the melting point of the ore and to remove impurities such as ash, sulphur, etc. It combines with the ashes of the fuel and the impurities of the ore to form fusible products which separate from the metal as slag.*

Bessemer pig derives its name because of its use in the manufacture of steel by Bessemer process using haematite ore. Impurities such as sulphur, phosphorus and copper are not desirable in the Bessemer pig. Foundry pig, also known as *grey pig*, contains sufficient quantity of free carbon and is produced when the furnace is provided with sufficient fuel. When fuel provided is insufficient and if sufficient sulphur is present in the ore *forge pig* is produced. This is also known as *white pig*. Mottled pig is in between the grey and white varieties. They exhibit mottled fracture.

### Composition

Pig iron contains 3–4% carbon, 0.5–3.5% silicon, 0.5–2% manganese, 0.02–0.1% sulphur and 0.03–1% Phosphorus.

### Properties

Pig iron is hard and brittle with fusion temperature of 1200°C and melts easily. It can be hardened but cannot be tempered and magnetised. Its compressive strength is high but is weak in tension and shear. Pig iron does not rust and cannot be riveted or welded.

### Uses

Pig iron is most suitable for making columns, base plates, door brackets, etc.

## 13.5 CAST IRON

Pig iron is remelted with limestone (flux) and coke and refined in Cupola furnace (Fig. 13.2). It is then poured into moulds of desired size and shape. The product is known as cast iron containing about 2–4% of carbon in two forms, *i.e.*, as the compound cementite—in a state of chemical combination; and as free carbon—in a state of mechanical mixture. Carbon in the first form is called combined carbon, and graphite in the latter form. The quality of cast iron thus depends upon the state in which carbon exists in it. The word cast iron is a misnomer as steel with carbon content less than 2% can also be cast. The striking difference between steel and cast iron is that the form or is plastic and forgeable while the latter is not. However, some of the modern cast iron develop a fair degree or plasticity and toughness.

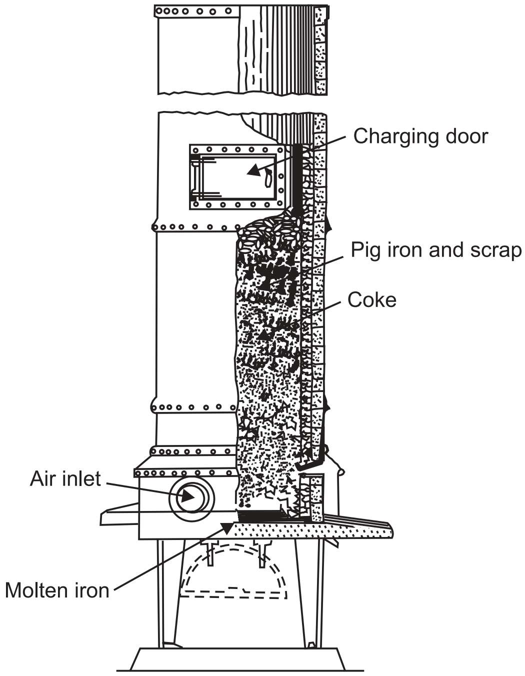

**Fig. 13.2 Cupola Furnace for Manufacture of Cast Iron**

### Methods of Casting

***Sand Casting*** The most common casting procedure involves pouring molten metal into a cavity in a mass of packed sand. Wooden patterns are used for moulds which are removed when the sand has dried. Each mould has a hole for casting through which the molten iron is poured. Air and hot gases escape through another hole. Cast material is taken out by breaking the mould after iron cools down.

***Hollow Casting*** is used for making columns and piles. For hollow casting of the objects a solid core is placed where the hollow is to be maintained. After casting the core and mould are taken out. Cast material becomes hollow due to the core.

***Vertical Sand Casting*** The mould box and the solid core is kept in vertical position. Alter cooling the core is taken out by crane. Good quality pipes can be obtained by this method.

***Centrifugal Casting*** Many blow holes are left in ordinary casting because of little control over temperature and the sand mould. The problem is overcome by centrifugal casting. Molten material is poured in a revolving metallic cylindrical mould in a controlled manner, rotating at the rate of 10,000 revolutions per minute. Large diameter pipes, gun barrels, etc. are cast by this method. The castings are dense and have a fine-grained structure with uniform and high physical properties. They are least subjected to directional variations on properties than static castings.

***Die Casting*** Die casting is cheap for commercial production. Casting is done under pressure, which may be as high as 140 MN / mm$^2$, into a split die cavity. Since the die is water cooled, the molten metal solidifies quickly, permitting early removal of the casting.

## Classification

Cast iron is classified as grey, white, malleable, mottled, chilled and toughened, and is described in Table 13.1.The nomenclature white and grey signify the appearance of the fracture of a casting. The rest of the terms signify the special properties developed in these classes by heat treatment and alloying.

## Properties

Cast iron is hard and brittle. It can neither be riveted nor welded. It is strong in compression (600 N / mm$^2$) but weak in tension (150 N / mm$^2$) and shear. Its specific gravity is 7.50. It has low melting point (1200°C) and is affected by sea water. It cannot be magnetized and is not suitable for forging. Iron containing large amounts of manganese and chromium are likely to be permanently white, while those having a high silicon content are grey. With proper adjustment in composition, cast iron may be rendered white by cooling rapidly or grey by cooling slowly from the molten state.

## Effect of Impurities

***Carbon:*** The proportion of carbon and its form more or less influence most of the physical and mechanical properties of cast iron. The melting temperature of cast iron is reduced as the carbon content or the percentage of combined carbon is increased. Consequently white cast iron has a lower melting point than grey cast iron. Shrinkage varies inversely as the carbon content.

### Table 13.1 Classification of Cast Iron

| *S. No.* | *Type* | *Properties* | *Composition (%)* | *Uses* | |
|---|---|---|---|---|---|
| 1. | Grey | Obtained from foundry pig | Carbon | 2.50– 3.75 | Pipes, fittings, |
| | | Good machinability | Silicon | 1.0– 2.0 | locomotive wheels, |
| | | Low melting point (1200°C) | Manganese | 0.40– 1.0 | machin beds |
| | | Rusts easily in air | Sulphur | 0.06– 0.12 | |
| | | Readily acted upon by acids | Phosphorus | 0.10– 1.00 | |
| | | Grey in colour | | | |
| 2. | White | Hard and brittle | Carbon (C) | 1.75– 2.3 | In the manufacture |
| | | Can hardly be machined | Silicon (Si) | 0.5– 0.9 | of malleable iron, |
| | | White silvery colour | Manganese (Mn) | 0.15– 0.5 | wrought iron |
| | | | Phosphorus (P) | 0.20– 0.70 | |
| | | | Sulphur (S) | 0.15– 0.25 | |
| 3. | Malleable | Obtained by partial removal of | | White Hearth Black Hearth | Automobile, agricultural |
| | | carbon, silicon, phosphorus, | Carbon (c) | 3.2–3.6 2.2–2.8 | equipments, |
| | | sulphur and manganese from | Silicon (Si) | 0.4–0.9 0.7–1.1 | rail-road engineering |
| | | cast iron. Soft and strong | Phosphorus (P) | 0.1 0.1 | |
| | | Available as white hearth | | | |
| | | and black hearth varieties | | | |
| 4. | Mottled | Made by heating cast iron | | | Small castings |
| | | with powdered haematite to | | | |
| | | redness, high toughness | | | |
| | | Fractured surface shows grey | | | |
| | | and white patches | | | |
| 5. | Chilled | Made by cooling cast iron | | | Roller mills, grinding mills, |
| | | rapidly causing the outer layer | | | cylinders, pistons, spoked |
| | | of the product to become hard | | | wheels for railways, guide |
| | | | | | rails, crossings in railways |
| 6. | Toughened | Produced by melting cast | | | Studs |
| | | iron with 1/4–1/2 of its weight | | | |
| | | of wrought iron scrap. | | | |

***Silicon:*** In small percentages (0.5–3%) silicon increases the fluidity of the molten iron, decreases blow holes and increases the density of castings. It also reduces the solubility of carbon in iron and shrinkage. When silicon is increased up to 6 per cent the iron becomes hard and has a mirror-like fracture.

***Sulphur:*** Sulphur is an undesirable element in cast iron and is limited to less than 0.1 per cent. It combines with manganese to form the sulphide (MnS) or, if the manganese is very low and not sufficient to satisfy the sulphur, iron sulphide (FeS) may be formed. Since these sulphides solidify at considerably lower temperatures, than cast iron, they tend to make castings brittle and weak at higher temperatures. High sulphur content also increases shrinkage and causes hard, brittle iron. These may be neutralized by proper additions of silicon.

***Phosphorus:*** When phosphorus is less than 0.5 per cent, it has no marked effect on cast iron. Usually it is present to the extent of 0.1 to 1.5 per cent. If more than 2 per cent, the iron is embrittled and strength diminished. High phosphorus irons are much more fluid and shrink less, which make them suitable for ornamental castings.

***Manganese:*** When present in range of 0.4–1.2%, manganese combines with sulphur, and—having satisfied sulphur—with carbon to form manganese carbide. It increases the tensile strength and hardness of iron. Manganese increases the solubility of carbon in iron and opposes the liberation of graphite, which is a cementite stabilizer. High percentage of manganese increases shrinkage and hardness. Thus in grey iron which is to be machined manganese should be kept low.

### Uses

On account of cheapness, strength, ease with which it may be melted and cast into more or less intricate shapes, ease of machining, high damping capacity, and ease with which its hardness may be varied, cast iron is the most used of the cast metals employed in engineering constructions and machines. Some of the more common uses of cost iron are making ornamental castings such as wall brackets, lamp posts; bathroom fittings such as cisterns, water pipes, sewers, manhole covers, sanitary fittings and; rail chairs, carriage wheels and machine parts subjected to shocks. It is used as basic material for manufacturing wrought iron and mild steel.

### Defects

Checks, segregation, blow holes and coarse grain originate during the cooling of the castings. Irons with high sulphur content are liable to have small cracks running transverse to longitudinal axis, called *checks,* due to greater shrinkage and lack of strength. Segregation is pronounced in high phosphorus iron. Carbon and silicon sometimes segregate in such manner that interior portions of the metal are white and exterior parts are grey rendering it difficult to machine the casting. *Blow holes* are caused due to improper venting of the mould or due to a high proportion of sulphur. *A coarse or open grain* in the iron is caused by too slow cooling, or due it may be due to a very high Phosphorus content. *Spongy spots* (the exaggerated forms of open grains) and *cold shuts* — faults planes in the metal produced by the solidification of part of the casting before the remaining molten metal was run into place — result from lack of fluidity in the iron or from improper grating.

## 13.6 WROUGHT IRON

Wrought iron considered to be pure iron, is produced by removing the impurities of cast iron. The total impurities are limited to 0.5 per cent with a maximum percentage of carbon as 0. 15, silicon 0.15–0.2%, Phosphorus 0.12–0.16%, sulphur 0.02–0.03% and manganese 0.03–0.1%. It is manufactured in reverberatory or puddling furnace (Fig. 13.3) by Astor's process. The molten iron is first refined by blasting air in the furnance. The metal is cooled and poured into moulds. The metal becomes brittle. It is then melted in reverberatory furnace where iron melts due to burning of gas. After melting, puddle balls are produced which are sent for shingling. Here the balls are formed as bloom. The bloom is sent to grooved rollers to form flat bars. The process is repeated several times to remove the impurities.

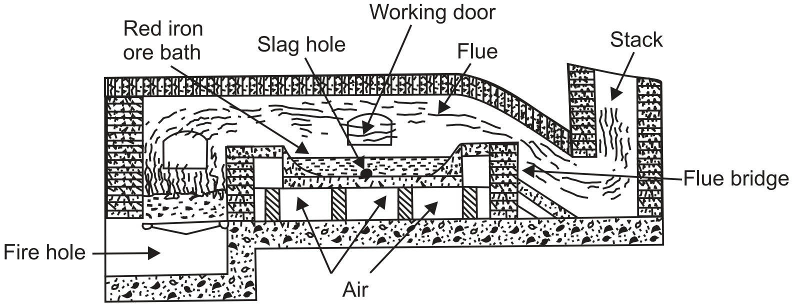

**Fig. 13.3 Puddling Furnace for Manufacture of Wrought Iron**

### Properties

Wrought iron is ductile, malleable, tough and moderately elastic. Its ultimate crushing strength is 200 N/mm$^2$ and ultimate tensile strength is 40 N/mm$^2$. Transverse to the direction of the rolling the tensile strength ranges from 60 to 85 per cent of its strength parallel to this direction. The modulus of elasticity of wrought iron is $1.86 \times 10^5$ N/mm$^2$ — The melting point of wrought iron is 1500°C and sp. gr. about 7.80. It can be forged and welded. Wrought iron effectively resists corrosion. It is tough and withstands shocks and can neither be hardened nor tempered. At about 900°C wrought iron becomes so soft that its two pieces can be jointed by hammering.

Alloying elements used in wrought iron include nickel, copper and molybdenum. Addition of nickel from 1.5 to 3.5 per cent produce substantial increases in the elastic limit and tensile strength. Nickel is also beneficial in preventing reductions of impact strength at subzero temperatures. Copper may be added to increase corrosion resistance properties.

### Uses

Roof coverings, rivets, chains, ornamental iron works such as gates, etc. are made of wrought iron.

### Defects

The harmful effect of sulphur and phosphorus appear to be less pronounced in wrought iron than in steel because of less opportunity for segregation in the puddling process. Furthermore, much of the impurities in wrought iron are affiliated with the slag rather than iron. However, a very high sulphur content (0.3–0.5%) is likely to cause the wrought iron to crumble or exhibit *red shortness*, in forging or welding. Sections rolled from red short wrought iron are likely to have rough edges. A phosphorus content of 0.4–0.5% causes the wrought iron to be *cold short* (iron becomes brittle at low temperatures). Such wrought iron cannot be refined by heat treatment. *Spilly places*, the defect due to burning of portions of the iron in puddling, are often found as spongy spots in wrought iron sheets and plates. *Blisters* are also found on plates and sheets of inferior wrought iron due to the oxidation of carbon in the iron by the oxide of iron in the slag.

## 13.7 STEEL

Steel is the most suitable building material among metallic materials. This is due to a wide range and combination of physical and mechanical properties that steels can have. By suitably controlling the carbon content, alloying elements and heat treatment, a desired combination of hardness, ductility and strength can be obtained in steel. On the basis of carbon content steel may be calssified as under:

| *Type of steel* | *Carbon content (%)* |
|---|---|
| Dead mild steel | < 0.15 |
| Mild steel | 0.15–0.3 |
| Medium carbon steel | 0.3–0.8 |
| High carbon steel<br>or hard steel | 0.8–1.5<br>(> 1 is also called cast steel or tool steel) |

### Manufacturing Methods

The prominent steel-making processes are:

1. Bessemer process
2. Cementation process
3. Crucible process
4. Open Hearth process
5. Electric Smelting process
6. Duplex process
7. Lintz and Donawitz (L.D.) process

The most prominent present-day steel-making process is the Bessemer process was introduced in 1856. The pig iron is first melted in Cupola furnace and sent to Bessemer converter (Fig. 13.4) Blast of hot air is given to oxidize the carbon. Depending upon the requirement, some carbon and manganese is added to the converter and hot air is blasted once again. Then the molten material is poured into moulds to form ingots. L.D. process is modification of the Bessemer process in which there in no control over temperature. By this method steel can be made

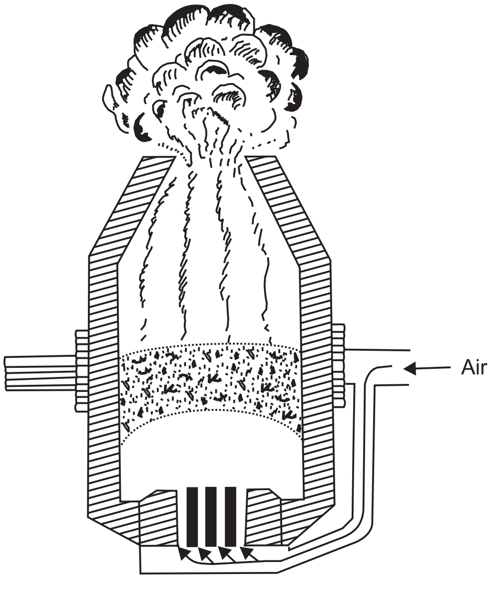

**Fig 13.4 Bessemer Converter for the Manufacture of Steel**

in hardly 25 minutes. In Open-hearth process also known as Siemen's-Martin process, the steel produced is more homogeneous than by Bessemer's. The electric process is costly but no ash or smoke is produced. The Crucible process involves melting of blister steel or bars of wrought iron in fire clay crucibles. Cast steel so obtained is very hard and is used for making surgical equipments. The Duplex process is a combination of Acid Bessemer process and Basic Open Hearth process.

## Properties and Uses

***Mild Steel*** Also known as low carbon or soft steel. It is ductile, malleable; tougher and more elastic than wrought iron. Mild steel can be forged and welded, difficult to temper and harden. It rusts quickly and can be permanently magnetised. The properties are: Sp. gr. = 7.30, ultimate compressive and tensile strengths 800–1200N / mm$^2$ and 600–800N / mm$^2$.

Mild steel is used in the form of rolled sections, reinforcing bars, roof coverings and sheet piles and in railway tracks.

***High Carbon Steel:*** The carbon content in high carbon steel varies from 0.55 to 1.50%. It is also known as hard steel. It is tougher and more elastic than mild steel. It can be forged and welded with difficulty. Its ultimate compressive and tensile strengths are 1350 N / mm$^2$ and 1400–2000 N / mm$^2$, respectively. Its Sp. gr. is 7.90.

High carbon steel is used for reinforcing cement concrete and prestressed concrete members. It can take shocks and vibrations and is used for making tools and machine parts.

***High Tensile steel:*** The carbon content in high tensile steel is 0.6–0.8%, manganese 0.6%, silicon 0.2%, sulphur 0.05% and phosphorus 0.05%. It is also known as high strength steel and is essentially a medium carbon steel. The ultimate tensile strength is of the order of 2000 N / mm$^2$ and a minimum elongation of 10 per cent.

High Tensile steel is used in prestressed concrete construction.

## Properties of Steel

The factors influencing the properties of steel are chemical composition, heat treatment, and mechanical work.

## Chemical Composition

The presence of carbon in steel gives high degree of hardness and strength. The addition of carbon to iron decreases the malleability and ductility of the metal, and reduces its permeability to magnetic forces.

The tensile strength of hot rolled steel bars is maximum between 1.0 and 1.2 per cent carbon. The elastic limit and the ultimate strength of steel increase with carbon content but at a lower rate. The compressive strength of steel increases directly with carbon content up to 1.0 per cent. The shear strength of steel also increases with the carbon content. The ratio of shear strength to the tensile strength is 0.80 for medium and low carbon steels and 0.60 for high carbon steels. The modulus of elasticity is nearly same for tension and compression and is practically independent of the carbon content.

The ductility of steel decreases markedly as the carbon content increases. The resistance of steel to heavy shocks or blows decreases with increase of carbon content.

***Effects of Principal Impurities on Steel:*** It is not feasible to entirely remove impurities in making either iron or steel. The final product always contains small percentages of the metallic impurities like silicon, manganese, sulphur, and phosphorus besides iron and carbon. Occasionally small percentages of copper and arsenic are also present. In well made steel these impurities generally range between 0.2 and 1.0 per cent and their resultant effect on the constitution of steel is often small. Of the common impurities, Phosphorus cannot be eliminated in the process of manufacture, whereas most of the silicon and manganese are introduced to improve the metal.

*Silicon* is often added to molten metal to remove oxygen and diminish blow holes. In structural steel it rarely exceeds 0.25 per cent. Silicon up to 1.75 per cent appears to increase both ultimate strength and elastic limit without decreasing ductility.

*Phosphorus* is considered to promote enlargement of the grains and thus produce brittleness. The ductility of low-carbon steel decreases slightly by the presence of 0.3–0.5 per cent phosphorus. However, yield point, ultimate strength and hardness of steel are increased. Resistance to shock is also reduced by 0.1 per cent phosphorus and the metal is rendered cold short (*i.e.*, brittle when cold). A decrease in toughness appears to be more pronounced in high-carbon than in low-carbon steels. The maximum limits for phosphorus are: for inferior grades of structural steel 0. 1, for best grades of structural steel 0.055, and 0.02 per cent for tool steels.

*Sulphur* readily combines with iron to form iron sulphide (FeS) which, when present in iron or steel, has a tendency to segregate and form brittle networks at the grain boundaries. On account of its low melting point, iron sulphide causes lack of cohesion between adjacent grains when heated above a red heat. Such brittleness at high temperature is termed as *red shortness* which makes steel or iron hard to roll or forge. Manganese sulphide has a much higher melting point than iron sulphidle and does not render ferrous metals red short. Therefore, inasmuch as manganese has a very powerful affinity for sulphur, it is possible to relieve red shortness by adding sufficient quantity of manganese to the molten metal to combine with sulphur. Theoretically the ratio of manganese to sulphur should be 1.70 to 1.0 in order to form manganese sulphide and completely satisfy sulphur. Less than 0.15 per cent sulphur content hardly exercises any appreciable effect on the mechanical properties of steel. When sulphur is present along with manganese it improves the machineability of steel.

*Manganese* has strong affinity for oxygen and sulphur and acts as a cleanser of the molten metal by withdrawing much of the undesirable impurities into the slag. Manganese increases the tensile strength, hardenability and dilutes the effect of sulphur. When more manganese is present than required for sulphur and oxygen the excess manganese forms carbide and acts as hardener.

*Copper* increases resistance to corrosion when present in small percentage.

*Arsenic* has a tendency to raise the strength and brittleness.

*Non-metallic Impurities* are mechanically suspended in the metal and are often called *slag inclusions* causing brittleness.

## Heat Treatment

The object of heat treatment is to develop desired properties in steel. The properties of steel can be controlled and changed as well by various heat treatments. A steel of given composition may be made soft, ductile and tough by one heat treatment, and the same steel may be made relatively hard and strong by another. Heat treatment affects the nature, amount, and character of the metallographic properties.

Heat treatment influences the solubility relations of the constituents, changes the crystallization either with respect to form or degree of aggregation and introduces or relieves internal stresses in the metal. The heat treatment process consists in subjecting, a metal to definite temperature–time course.

Some of the principle purposes of heat treatment are as follows.

1. To enhance properties such as strength, ductility, hardness and toughness.
2. To relieve internal stresses and strains.
3. To refine the grain.
4. To remove gases.
5. To normalize steel after heat treatment.

## Hardening

This heat treatment consists of heating the steel above the upper critical temperature holding at that temperature until phase equilibrium has been established, and then quenching rapidly to produce a martensite structure. Martensite is the chief constituent of hardened steel and is fibrous or needle like structure. Hardened steel is very brittle and cannot be used for practical purposes. The quenching medium is usually brine, water or oil, depending on the desired cooling rate.

The objective of this treatment may be to secure a given hardness to a desired depth in steel. But in most instances the hardening treatment may simply be considered as starting point from which better combinations of desired properties may be secured by subsequent heat treatment. Fully hardened steel are not suitable for most commercial uses because they are hard and brittle and have poor toughness.

## Tempering

A plain carbon steel that has been hardened is in metastable condition or equilibrium. If this hardened steel is reheated to some temperature below the critical range, a more stable condition will be obtained. Since hardened steels do not usually have the combination of properties desired for specific uses, modification is affected by tempering.

When a thick piece of steel is cooled rapidly it develops additional strains as the surface cools quicker than the interior. To relieve this strain, steel is subjected to the process tempering which consists in slowly heating the steel to a predetermined subcritical temperature and then cooling it slowly. This temperature varies from 100°C to 700°C. The higher the temperature of tempering the softer is the product. The properties like toughness and ductility are automatically introduced with release of strain.

## Annealing

It is a general term used for heating and slow cooling of metal, glass or any other material, which has developed strain due to rapid cooling.

The process consists of heating the steel to a temperature below the critical range, but high enough to obtain strain recrystllization and then cooled in any manner. The exact heating temperature depends on the composition of steel and the amount of work that it has received, but is frequently between 500°C to 600°C. Annealing of steel in addition to removing strain introduces one or more of the following properties.

1. Introduces softness, ductility and malleability.
2. Alters electrical, magnetic and other physical properties.
3. Produces a definite microstructure and grain refinement.
4. Removes gases.

Full annealing consists of heating iron alloy 20°C to 50°C above critical temperature range, holding at that temperature for the required period of time to convert it to austenite followed by slow cooling. Full annealing usually decreases hardness, strength and resistance to abrasion, and increases ductility and mechaneability.

## Normalizing

It consists in heating steel above critical range and cooling rapidly in air, but at rate slower than the critical cooling rate. The purpose of this heat treatment is to refine the grain structure resulting from rolling, forging or other manufacturing processes.

## Mechanical Works

Steel products are made by casting molten refined steel of suitable composition into the desired form or by mechanically working steel form the ignot through many intermediate forms to the desired product. Mechanical work may be hot or cold. Mechanical working involves many stages of hot working and may or may not include eventual cold working.

The most important methods of hot working steel are hot rolling, hammer forging, hydraulic and mechanical press forging, and hot extrusion. Miscellaneous hot working methods include hot spinning, hot deep drawing, hot flanging and hot bending, Heat treatment after hot working is seldom used with low-carbon steels, whereas high-carbon steels are always hardened and tempered.

The principle methods of cold working steel are cold rolling, cold drawing and cold extrusion. The cold working methods are used to provide increased strength, accurate dimensions, and bright and scale free surfaces. Thin sheets and small diameter wires are produced by cold-working methods. Cold working results in increased density, hardness, and brittleness, and produces an internally strained condition in the steel.

Mechanical work alters the form of the crystalline aggregate and introduces internal stresses. Cold rolling increases the tensile elastic limit from 15 to 97 per cent and tensile strength from 20 to 45 per cent. In elastic resilience the cold-rolled metal is superior to the hot-rolled, whereas in energy of rupture it is inferior to the hot-rolled metal. The modulus of elasticity is slightly increased by cold rolling. Practically, metals are rolled, forged, drawn, stamped and pressed.

Most of steel building components—beams, rails, steels, bars, reinforcement, pipes—are manufactured by rolling. Rivets and bolts are made by forging operations. Thin-walled items (tubes) and round, square, hexagonal rods of small cross-sectional areas (up to 10 $mm^2$) are manufactured by drawing. Stamping and pressing increases the buckling strength of plates to be used for making them suitable for steel tanks and containers. Steel trusses, towers, tanks, bridges and frames of multistorey buildings are some of the examples of structures made of steel. The most common and important application of steel in buildings is the rolled steel sections and reinforcing bars and are described in the following sections.

## 13.8 ROLLED STEEL SECTIONS

Structural steel can be rolled into various shapes and sizes in rolling mills. Usually sections having larger moduli of section in proportion to their cross-sectional areas are preferred. Steel sections are usually designated by their cross-sectional shapes. The shapes of the rolled steel sections available today have been developed to meet structural needs. Cross-section and size are governed by a number of factors: arrangement of material for optimum structural efficiency; functional requirements (surfaces that are easy to connect to, flat surfaces suitable for supporting other materials, etc.,) dimensional and weight capacity of rolling mills, and material properties which, for example, inhibit the hot rolling of wide thin elements because of excessive warping or cracking that might occur.

I.S Hand Book No. 1 published by the Bureau of Indian Standards provides the dimensions, weights and geometrical properties of various sections. Structural shapes are abbreviated by a certain system described in the hand book for use in drawings, specifications and designs.

The types of rolled structural steel sections are as follows:

| | | |
|---|---|---|
| 1. | Rolled steel I-sections | Fig. 13.5(a) |
| 2. | Rolled steel channel sections | Fig. 13.5 (b) |
| 3. | Rolled steel T-sections | Fig. 13.5 (c) |
| 4. | Rolled steel angle-sections | Fig. 13.5 (d) |
| 5. | Rolled steel tube-sections | Fig 13.5 (e) |
| 6. | Rolled steel bars | Fig. 13.5 (f) |
| 7. | Rolled steel flats | Fig. 13.5 (g) |
| 8. | Rolled steel plates | |
| 9. | Rolled steel sheets | |
| 10. | Rolled steel strip | |

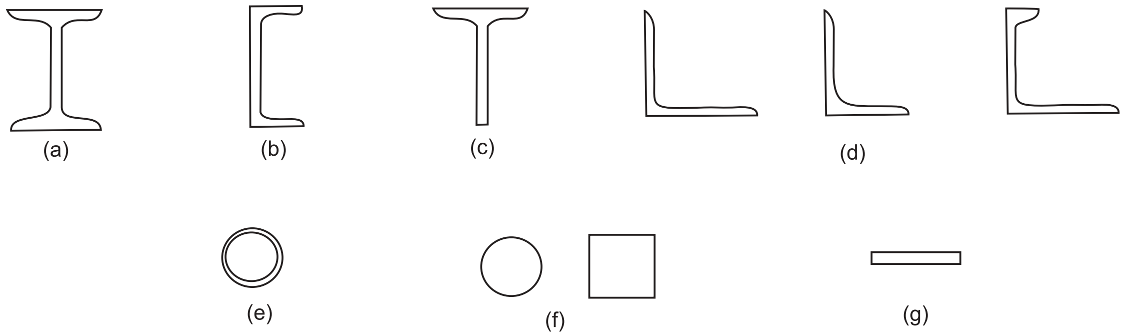

**Fig. 13.5 Rolled Structural Shapes**

Angle sections were probably the first shapes rolled and produced in 1819 in America. I-beam shape was introduced by Zores of France in 1849. By 1870 Channels and Tees were developed. All these early shapes were made of wrought iron. The first true skeletal frame structure, the Home Insurance Company Building, was built in Chicago in 1884.

An I-section is designated by its depth and weight, e.g., I.S.L.B. 500 @ 735.7 N / m means, the I-section is 500 mm deep and the self weight is 735.7 N per metre length.

A channel section is designated by its depth and weight. For instance, I.S.L.C, 350 @ 380.6 N / m means that the channel section is 350 mm deep and the self weight is 380.6 N per metre length.

**Note: All standard I-beams and channels have a slope on the inside face of the flange of** $16\frac{2}{3}$ **%.**

A T-section is designated by its depth and weight, e.g., I.S.N.T. 125 @ 268.8 N / m, means the Tee section is 125 mm deep and the self weight is 268.8 N per metre length.

An angle-section is designated by its leg lengths and thickness. For example, I.S.A. 40 × 25 × 6 mm means, the section is an unequal angle with legs 40 mm and 25 mm in length and thickness of the legs 6 mm.

Steel tubes are designated by their outside diameter and self weight.

Steel flats are designated by width and thickness of the section, e.g., 30 I.S.F. 10 mm means the flat is 30 mm wide and 10 mm thick.

Steel plates are designated by length, width and thickness, e.g., I.S.P.L. 2000 mm × 1000 mm × 8 mm, means the plate is 2000 mm long, 1000 mm wide and 8 mm thick.

Steel sheets are designated by length, width and thickness, e.g., I.S.SH. 2000 mm × 600 mm × 4 mm, means the sheet is 2000 mm long 600 mm wide and 4 mm thick.

Steel strips are designated by width and thickness, e.g., I.S.ST. 200 mm × 2 mm, means the strip is 200 mm wide and 2 mm thick.

The round bars are generally used as reinforcement in reinforced and forestressed concrete structures, and are dealt in details in the section to follow. These as well as square bars are used also for decorative purposes and grills for fencing, parapets etc.

## 13.9 REINFORCING STEEL BARS

Cement concrete is one of the most versatile and established construction material throughout the world. Concrete being extremely weak in tension requires reinforcement, which is in variably steel. Steel reinforcement is available in the form of bars of specific diameters with different chemical composition, e.g., mild steel and high tensile steel, and surface characteristics—plain or deformed. The types and grades of reinforcing bars are given in Table 13.2. Good steel should not have carbon content of more than 0.25%, sulphur content of more than 0.05% and phosphorus content of more than 0.05%.

Effectiveness of concrete reinforcement may be enhanced by the use of low-alloy steel, or by mechanical strengthening, or by heat treatment. Mechanical strengthening of steel is done by drawing, stretching, twisting; the yield point of steel rises by about 30%. Heat treatment increases strength and improves mechanical properties of steel and effects 30 to 40% savings on reinforcement.

Steel bars can also be strengthened by cold drawing after rolling. Mild steel has a definite yield point. Cold working increases the yield stress of mild steel. Higher yield strength of reinforcing steel bars lowers the steel requirement and thus the cost of reinforcement and its fixing is reduced. The major drawback of cold working is the introduction of internal stresses in steel bars. Some of the other disadvantages of cold working are reduced ductility of steel, and reduced shear strength of RCC beams; the longitudinal tensile reinforcement is reduced. Heating of cold worked steel to high temperatures results in annealing of steel causing loss of increased strength due to cold working.

## Classification

Steel for reinforcing bars can be classified according to its use. The earliest steel used for construction purposes was plain *mild steel* bars, designated as Fe- 250 and so. Even nowadays it is as engineers friendly as before in the underdeveloped and developing countries. For impacts and suddenly applied loads mild steel reinforcement may prove to be a better choice since high yield steels are more brittle and may fail under such conditions.

**Table 13.2 Types and Grades of Reinforcing Bars**

| *Types of steel* | *Bar diameter* | *Yield stress or 0.2% proof stress* | *Minimum elongation* |
|---|---|---|---|
| 1. Mild steel grade-I | Upto and including 20 mm | 250 N/mm$^2$ | 23% |
| | Over 20 mm upto and including 50 mm | 240 N/mm$^2$ | 23% |
| 2. Mild steel grade-II | Upto and including 20 mm | 225 N/mm$^2$ | 23% |
| | Over 20 mm upto and including 50 mm | 215 N/mm$^2$ | 23% |
| 3. Medium tensile steel | Upto and including 16 mm | 350 N/mm$^2$ | 20% |
| | Over 16 mm upto and including 32 mm | 340 N/mm$^2$ | 20% |
| | Upto and including 50 mm | 330 N/mm$^2$ | 20% |
| 4. High strength deformed steel bars | All sizes | 415 N/mm$^2$ | 14.5% |
| | | 500 N/mm$^2$ | 8% |
| | | 550 N/mm$^2$ | 6% |
| 5. TMT Bars | All sizes | 415 N/mm$^2$ | 22% |
| | | 500 N/mm$^2$ | 20% |
| | | 550 N/mm$^2$ | 18% |

*High yield strength deformed* (HYSD) bars have lugs, ribs, or deformations on the surface (Fig. 13.6), which inhibit longitudinal movement of the bar relative to the surrounding concrete. Thus, the deformed surface ensures better bond between reinforcement and concrete. These bars do not have a definite yield point. HYSD bars result in a considerable increase in yield, tensile and bond strength when twisted hot or cold. Cold twisted deformed (CTD) bars are most suitable for building purposes and are widely used in India. CTD bars with trademark TOR are called *TOR-steel*. Tor-steel is high strength deformed bars with high yield and bond strength. These bars result in almost 40% economy.

*Thermo-mechanically treated* (TMT) bars are extra high strength reinforcing bars, which eliminate any form of cold twisting. In this process, the steel bars receive a short intensive cooling as they pass through a water cooling system after the last rolling mill stand.

The reduction in temperature converts the surface layer of the steel bar into a hardened structure. This phase of intensive cooling is further followed by cooling in atmosphere, so that the temperature of core (which is still hot) and the temperature of the cooled surface is equalized. Hence, the surface layer gets tempered by the heat form the core. The resulting structure is a tempered martensite zone at the periphery and a fine grain ferrite pearlite structure in the centre zone. Due to the improved properties of high strength combined with

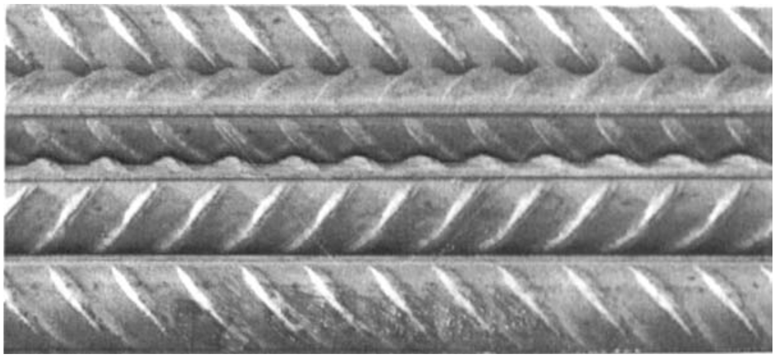

**Fig. 13.6 High yield strength deforemd bars**

toughness and ductility, TMT bars score over mild steel plain and CTD steel bars. TMT steel exhibits a definite yield point. It can resist high temperature up to 500°C with no loss of strength. These are more ductile compared to CTD bars. TMT bars possess excellent bendability due to the unique feature of uniform elongation. They can withstand bending and rebending with internal diameter of 1D and 4D respectively (D = diameter of the bar). TMT bars have very good weldability. They do not suffer loss of strength at the weld joints. These bars can also be easily welded with cold twisted bars. No pre-heating or post-heating is required during welding. The unique feature of these bars is their high fatigue resistance on dynamic loading on account of the high strength of the surface layer. The thermally hardened reinforcing steel bars are more suitable for use in places prone to fire hazards, because of the thermal stability of the heat treated structure of the bars and a total absence of a cold worked structural zone. TMT bars have high percentage of uniform elongation—thus high formability.

These bars can be used for general concrete reinforcement in buildings, bridges and various other concrete structures. They are highly recommended for use in high-rise buildings because of the saving in steel due to the higher strength. A comparison for saving in steel by using TMT bars is given in Table 13.3.

**Table 13.3 Saving in Steel by using TMT Bars**

| | *TMT 415* | *TMT 500* | *TMT 550* |
|---|---|---|---|
| Yield strength, MPa, Min | 415 | 500 | 550 |
| Saving in steel compared to Plain bar | 40% | 44% | 47% |
| Saving in steel compared to Fe-415 CTD | – | 14% | 19% |

The latest development is steel reinforcing bars is *thermo-mechanically treated high-strength corrosion resistant* (TMT-HCR) rebars. The TMT-HCR rebars are concrete embedded bars, which have superior resistance to aggressive weather conditions. TMT–HCR reinforcement bars exhibit higher thermal resistance even at temperatures up to 600°C. The retention of significant strength or, in other words, resistance to softening, is attributed to design of steel chemistry, presence of tempered martensite layer of the rebar surface and absence of any cold worked structural zone. The chemistry of TMT-HCR rebars is appropriately designed for substantially reducing atmospheric and marine corrosion.

TMT-HCR rebars possess a unique combination of strength, ductility and bendability which testifies the products toughness and ease of fabrication. Excellent bendability is exhibited by these rebars as we as superior bend values. As a matter of fact, TMT-HCR rebars have been found to withstand even close bend without exhibiting surface cracking. The rib pattern of these rebars ensures excellent bond strength between the rebar surface and concrete; bond strength attainable with such reinforcement bars fulfils the requirements of Indian specifications. The thermally hardened TMT-HCR rebars are ideal for use in places prone to fire hazards.

Compared to conventional CTD bars, TMT-HCR rebars exhibit superior corrosion resistance owing to the absence of torsional stresses in thermo-mechanically treated rebars and design of suitable alloy chemistry. These rebars can be easily welded and do not require pre-heating or post-heating treatments. These bars can also be welded with conventional CTD bars, permitting usage independently or in combination in reinforcement structures.

The advantages of TMT-HCR rebars over conventional CTD rebars are many and include: saving in steel, reduction in costs, enhanced strength combined with high ductility, superior atmospheric and marine corrosion resistance, good weldability and no loss of strength at welded joints, better high temperature thermal resistance, easy welding at site owing to better ductility and bendability.

TMT-HCR rebars find wide application in different spheres including coastal and marine environments which are susceptible to corrosion, bridges, flyovers, dams, industrial structures, high rise buildings and underground platforms.

## 13.10 RUSTING AND CORROSION

When steel is exposed to atmosphere, it is subjected to action of atmospheric agencies. The humid air causes the rusting of steel (the formation of oxides on the surface of steel), also the atmospheric conditions along with rain produces oxidation and corrosion. Consequently, the physical and mechanical properties are affected. In due course of time cracks and discontinuities may form in the oxide film, due to electro-chemical action on the metal surface, providing a fresh source of atmospheric action resulting in further corrosion. Once rusting is initiated, it gradually increases and corrodes iron. Rusts in the form of scales are peeled off from the swelled surface of iron. It is serious problem as the surface becomes rough with rusted iron projections. This may injure users. Also, the loss of steel sectional area may cause failure of structural elements.

Of the various theories of corrosion, the acid theory is applicable to the corrosion of iron. According to this theory rusting is caused by action of oxygen, carbon di-oxide and moisture converting the iron into ferrous bicarbonate. Further, the ferrous bicarbonate on oxidation changes to ferric bicarbonate and subsequently to hydrated ferric oxide.

$$\mathrm{Fe + O + 2CO^2 + H_2O = Fe\ (HCO_3)_2}$$

$$\mathrm{2Fe(HCO_3)_2 + H_2O + O \rightarrow 2Fe(OH)CO_3 + 2CO_2 + 2H_2O}$$

$$\mathrm{Fe(OH)CO_3 + H_2O \rightarrow Fe(OH)_3 + CO_2 \uparrow}$$

To safeguard iron and steel from rusting and corrosion some of the prevalent methods are enamelling; applying metal coatings – galvanizing, tin plating, electroplating; and applying organic coatings – painting and coal tarring. Of these methods painting is the most common. Enamelling consists in melting a flux on the surface of iron in muffle furnace and then coating it with a second layer of more fusible glaze. Galvanising is the process of coating iron with a thin film of zinc, whereas in tin plating a film of tin is coated. Painting consists in applying a coat of read lead and then applying a coat of enamel or aluminum paint. For the use of iron or steel in substructures instead of enamel paint coal tar is applied on its surface. In electroplating some metal coating such as chromium, nickel or zinc is applied on the surface of iron.

## 13.11 TENSILE TESTING OF STEEL SECTIONS (IS: 1608)

Tensile tests are used to determine the elastic modulus, yield and tensile strength, elongation, strain hardening rate, poisson's ratio and many other mechanical properties of a material. This test is conducted on a test piece whose cross-section may be circular, square, rectangular or of some chosen form. For test pieces in rectangular shape the width to thickness ratio should be less than 8:1. The test piece is strained by a tensile stress, in general to fracture, to determine the maximum stresses that can be sustained by it. The dimensions of the test pieces circular and rectangular in cross-section are given in Table 13.4 and 13.5.

**Table 13.4 Dimensions of Circular Section Test Pieces**

| *Cross-Sectional Area* $S_0$ *(mm$^2$)* | *Diameter* $d$ *(mm)* | *Gauge Length* $L_0$ *(mm)* | *Minimum Parallel Length* $L_c = 5.5d$ *(mm)* | *Minimum Transition Radius* $r$ *(mm)* |
|---|---|---|---|---|
| 400 | 22.56 | 113 | 124 | 23.5 |
| 200 | 15.96 | 80 | 88 | 15 |
| 150 | 13.82 | 69 | 76 | 13 |
| 100 | 11.28 | 56 | 62 | 10 |
| 50 | 7.98 | 40 | 44 | 8 |
| 25 | 5.64 | 28 | 31 | 5 |
| 12.5 | 3.99 | 20 | 22 | 4 |

***Notes:***

**(i) The gauge length is the part of the test specimen on which elongation is measured at any moment during the test.**

**(ii) Test pieces with diameters other than those given in this table may be used provided that the gauge length $L_0 = 5.65\sqrt{S_0}$**

**Table 13.5 Dimensions of Rectangular Section Test Pieces (Non-Proportional)**

| *Width* $b$ *(mm)* | *Gauge Length* $L_0$ *(mm)* | *Minimum Transition Radius* $r$ *(mm)* | *Approximate Total Length* $L_t$ *(mm)* |
|---|---|---|---|
| 40 | 200 | 25 | 450 |
| 20 | 200 | 25 | 375 |
| 25 | 100 | 25 | 300 |
| 12.5 | 50 | 25 | 200 |
| 6 | 24 | 25 | 100 |
| 3 | 12 | 25 | 50 |

***Notes:***

**(i) Notwithstanding the above, test pieces having gauge length equal to $5.65\sqrt{S_0}$ are permitted.**

**(ii) For any width from 3 to 25 mm a gauge length of 50 mm may be used, the total length being adjusted accordingly.**

**(iii) A straight, parallel test piece without enlarged ends is permissible for any size.**

The preliminary step of the test is to mark the gauge length ($L_0$) on the specimen, which is the prescribed part of the test piece on which the elongation is measured at any moment during the test. The gauge length is specified as $L_0 = 5.65\sqrt{S_0}$, where $S_0$ is the initial area of cross-section. The standard test piece is gripped at either end by suitable apparatus in a testing machine which slowly exerts an axial pull so that the steel is stretched until it breaks. Figure 13.7 shows the specimens with appropriate notations and Fig. 13.8 shows the broken specimen.

For determining tensile strength, the specimen is loaded in accordance with the following conditions:

(i) In the plastic range, the rate of separation of the cross-heads of the testing machine, expressed as a percentage of the parallel length per minute, should at any moment, be not greater than twice the minimum specified elongation +10.

(ii) If a yield or proof stress is not to be determined, the rate within the elastic range may be as high as that permitted in the plastic range.

In all cases, the speed of testing should be as uniform as possible and the change of speed from one range to the other should be made gradually and without shock.

The ultimate load divided by the original cross-sectional area A, gives the ultimate strength and the load at which specimen breaks when divided by area A, gives the breaking strength.

Another important property to be obtained form the tensile test is the percentage of elongation at failure which gives an idea of the ductility of the material. The elongation is given by

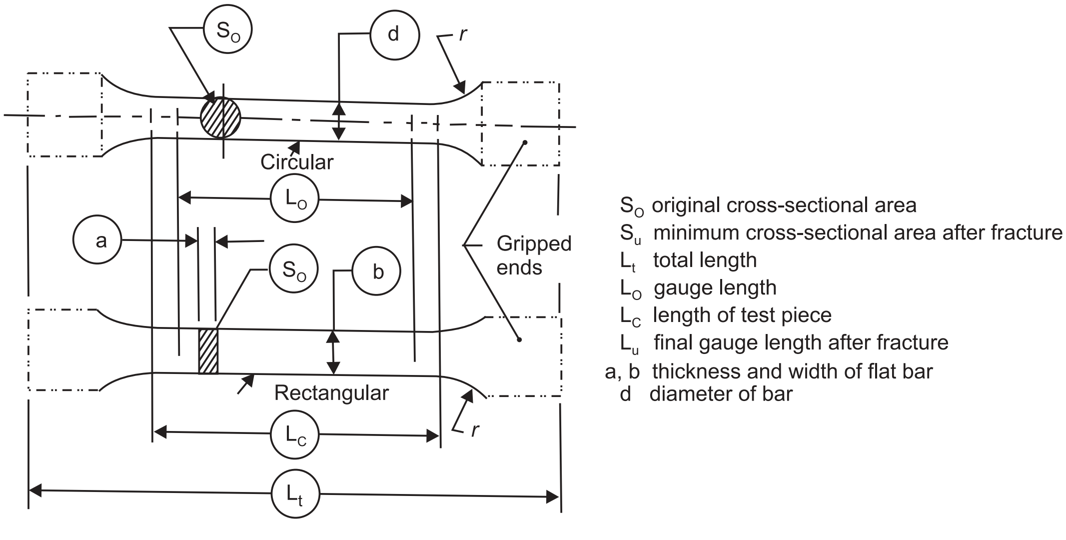

**Fig. 13.7 Test Pieces of Circular and Rectangular Cross-section**

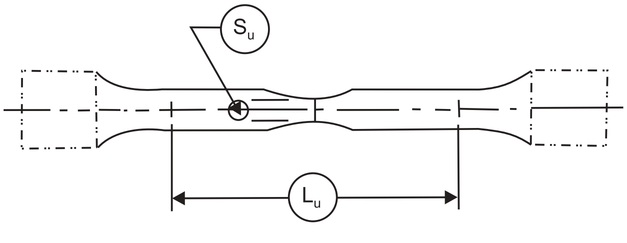

**Fig. 13.8 Test Pieces of Circular Cross-section after Fracture**

$$\text{Percentage Elongation} = \frac{(\text{Elongated length between gauge point} - L_0)}{L_0} \times 100$$

The main objective of this test is to arrive at the appropriate stress-strain diagram to estimate the behavior of the material. A typical stress-strain curve for mild steel is shown in Fig. 13.9. This figure gives the values of various quantities directly. The Proportional Limit ($P_L$) is the stress up to which stress and strain are proportional to each other and their ratio is called the modulus of elasticity (Young's Modulus) given by:

$$E = \sigma / \varepsilon$$

Where $\sigma$ is the uni-axial stress below $P_L$ and $\varepsilon$ is the strain corresponding to $\sigma$. The yield stress for steel is the stress obtained at an instant during the tensile test at which the plastic deformation continues to increase at nearly constant stress. While determining the yield stresses, the specimen is loaded so that the strain rate during the elastic range is controlled in accordance with the following conditions:

(i) The actual rate of strain of the parallel length of the specimen at the time of yielding should not exceed 0.15 / min. If this rate of straining cannot be achieved directly, it should be obtained by controlling the rate of loading just before field commences.

(ii) The elastic stress rate should be less than 30 N / mm$^2$ per second to avoid errors due to inertia efffects and the extension of the specimen can be recorded from cross-head motion.

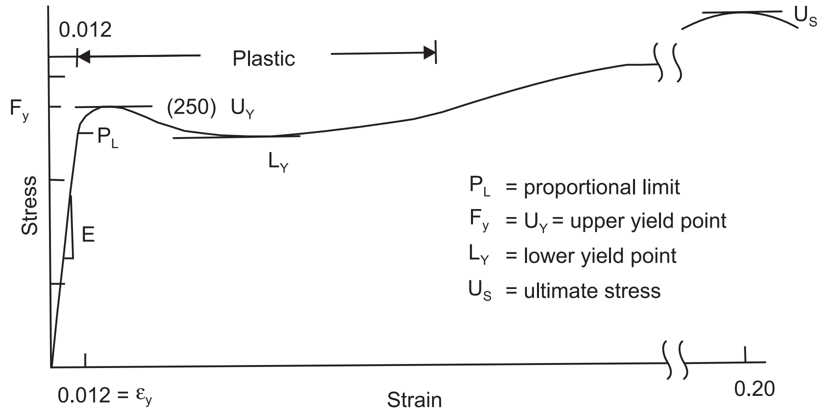

**Fig. 13.9 Stress-strain Curve for Mild Steel**

The first point of stress at which strain increases without increase in stress is the upper yield point ($U_Y$) and the point at which there is an upward trend in the stress-strain curve beyond the first yield point is the lower yield point ($L_Y$). If the upper and lower yield stresses cannot be easily obtained from the stress-strain diagram, a 0.5% total elongation proof stress may be regarded as the lower yield stress if permitted.

## 13.12 ALLOY STEEL

In general, the properties desired in a metal to be used as building material are not present to the best advantage in any single metal. To develop specific properties a combination of metals or metallic substances is done and are classed as alloys. Some of the most common alloys, their properties and uses are given in Table 13.6.

**Table 13.6 Properties and Uses of Alloy Steels**

| *S. No.* | *Alloy steel* | *Composition* | *Properties* | *Uses* |
|---|---|---|---|---|
| 1. | Stainless steel | Chromium 16% | Very hard and tough<br>High elastic and ultimate strength<br>Acid and rust proof | Ball bearings, dies, crushing machines, razors. |
| 2. | Nickle steel | Nickel 3.5% | More elastic<br>Higher tensile strength<br>Lesser brittle than mild steel<br>Improved hardness and ductility | Automobile and airplane parts |
| 3. | Invar steel | Nickel 30–40% | Low coefficient of thermal expansion | Delicate instruments |
| 4. | Vanadium steel | Vanadium 0.1–2% | High tensile and yield strength<br>Resistance to softening at high temperatures | High speed tools, locomotive castings, autoparts, chassis |
| 5. | Tungsten steel | Tungsten 14–20% | High cutting hardness<br>Resistant to abrasion | Drilling machines, high speed tools |
| 6. | Manganese steel | Manganese 12–15% | Hard, tough and strong<br>Difficult to machine<br>High electrical resistance | Points and crossing in railways, rollers, jaws of crushers,<br>Heavy earth and mining equipments |
| 7. | Molybdenum steel | Molybdenum 0.2–0.3% | Maintains tensile strength at high temperatures | Gears, axles, shafts |

The important reasons for alloy additions are:

1. To increase the hardenability of steel. The steel in this group are usually heat treated by quenching and tempering, for it is only this way that the added expanse of the alloys can be justified through the better combination of properties that is obtained.
2. To strengthen the steel when it is to be used without special heat treatment. The steels that fall in this category are designed specifically for constructional purposes.
3. To confer some special property such as machinability, corrosion resistance wear resistance, etc.

## EXERCISES

1. (a) Name the ores required for making steel.
   (b) What is pig iron? Describe how it is manufactured from iron ore.
   (c) Describe briefly the manufacture of steel by open hearth process.
2. (a) State the differences between mild steel, wrought iron, cast iron and cast steel.
   (b) Give the properties and uses of stainless steel and high carbon steel.
   (c) What are the different methods of castings? State their advantages and disadvantages?
3. What is the effect of carbon, sulphur, phosphorus and silicon on
   (a) Steel (b) Cast iron (c) Wrought iron
4. (a) Specify some important uses of cast iron, wrought iron and mild steel.
   (b) What are the factors controlling composition and quality of steel?
   (c) What is alloy? Describe the properties and uses of some of the steel alloys.
5. (a) What is meant by cold short and red short irons?
   (b) What are the effects of different types of impurities in iron on its physical and mechanical properties?
   (c) Briefly describe the defects of cast iron.
6. What type of steel would you recommend in the following cases
   (a) Reinforcement in prestressed concrete and cement concrete
   (b) Cables of suspension bridge (c) Bridge girder
   (d) Spring (e) Hammer
7. Write short notes on the following:
   (a) Puddling (b) Red shortness
   (c)Grey cast iron (d) Bessemer pig iron
8. State the carbon contents and uses of the following metals:
   (a) Pig iron (b) Cast iron
   (c)Wrought iron (d) Low-carbon steel
9. (a) Describe in detail about the reinforcing steel used in reinforced cement concrete.
   (b) Describe in detail testing of steel sections.
   (c)Write a note on rolled steel sections.
10. (a) Defferentiate between mild steel rods and HYSD Bars.
    (b) Illustrate different market forms of rolled steel sections.
11. (a) Enumerate the properties of hard steel and mild steel.
    (b) Describe the properties and uses of high tensile steel.
12. Describe breefly corrosion of steel and measures adopted for its prevention.

## OBJECTIVE TYPE QUESTIONS

1. The crudest form of iron is
   (a) mild steel (b) pig iron (c) wrought iron (d) cast iron
2. The stainless steel consists of
   (a) 16% chromium (b) 35% nickel (c) 30% nickel (d) 12–15% manganese
3. Which of the following pairs are correctly matched?

| | | |
|---|---|---|
| 1. | Alpha iron | Non-magnetic |
| 2. | Beta iron | Strongly magnetic |
| 3. | Gamma iron | Non-magnetic and capable of dissolving carbon |
| 4. | Delta iron | Non-magnetic and absorbs very little carbon |

Select the correct answer using the codes given below:

(a) 3 and 4 (b) 1 and 2 (c) l, 3 and 4 (d) 2 and 4

4. Match List-I with List-II and select the correct answer using the codes given below the lists:

| | *List-I* | *List-II* |
|---|---|---|
| A. | Ductility | 1. Failure without warning |
| B. | Brittleness | 2. Drawn permanently over great changes of shape without rupture |
| C. | Tenacity | 3. Absorption of energy at high stress without rupture |
| D. | Toughness | 4. High tensile strength |

**Codes:**

| | A | B | C | D | | A | B | C | D |
|---|---|---|---|---|---|---|---|---|---|
| (a) | 1 | 2 | 4 | 3 | (b) | 1 | 2 | 3 | 4 |
| (c) | 2 | 3 | 4 | 1 | (d) | 2 | 1 | 4 | 3 |

5. Match List-I with List-II and select the correct answer using the codes given below the lists:

| | *List-I*<br>(*Ferrous Metal*) | | *List-II*<br>(*Furnace*) |
|---|---|---|---|
| A. | Pig iron | 1. | Cupola |
| B. | Cast iron | 2. | Puddling |
| C. | Wrought iron | 3. | Bessemer converter |
| D. | Steel | 4. | Blast |

**Codes:**

| | A | B | C | D | | A | B | C | D |
|---|---|---|---|---|---|---|---|---|---|
| (a) | 1 | 2 | 3 | 4 | (b) | 4 | 2 | 1 | 3 |
| (c) | 4 | 1 | 2 | 3 | (d) | 3 | 1 | 2 | 4 |

6. Match List-I with List-II and select the correct answer using the codes given below the lists:

| | *List-I* | | *List-II* |
|---|---|---|---|
| A. | Pig iron | 1. | L.D. process |
| B. | Cast iron | 2. | Reverberatory furnace |
| C. | Wrought iron | 3. | Cupola furnace |
| D. | Steel | 4. | Electric reduction furnace |

**Codes:**

(a) A B C D
2 1 4 3

(b) A B C D
3 1 2 4

(c) A B C D
4 3 2 1

(d) A B C D
3 4 1 2

7. Consider the following statements:
Soft varieties of pig iron are also known as
1. foundry pig 2. grey pig
3. forge pig 4. mottled pig
Of these statements
(a) 1, 2, 3 and 4 are correct (b) 1 alone is correct
(c) 1 and 2 are correct (d) 3 and 4 are correct

8. Consider the following statements:
Excess of sulphur in steel results in
1. red shortness 2. segregation
3. cold shortness
Of these statements
(a) 1 alone is correct (b) 2 alone is corret
(c) 2 and 3 are correct (d) 1 and 2 are correct

9. The ratio of Young's modulus of high tensile steel to that of mild steel is about
(a) 0.5 (b) 1.0 (c) 1.5 (d) 2.0

10. Which of the following types of steels is used in the manufacture of rails?
(a) Mild steel (b) Manganese steel
(c) Cast steel (d) Bessemer steel

11. Vanadium steel is normally used in the manufacture of
(a) axles and springs (b) ball bearings
(c) magnets (d) railway switches and crossings

12. Tungsten steel is normally used in the manufacture of
(a) drilling machines (b) heavy earth equipments
(c) heavy mining equipments (d) delicate instruments

13. In mild steel the iron content is about
(a) 50% (b) 80% (c) 90% (d) 99%

14. The ultimate tensile strength of mild steel in $N/mm^2$ is
(a) 140 (b) 400 (c) 600 (d) 1000

15. The ultimate tensile strength of high carbon steel in $N/mm^2$ may be as high as
(a) 600 (b) 1000 (c) 1500 (d) 2000

## Answer Table

1. (b) 2. (b) 3. (a) 4. (d) 5. (c) 6. (c) 7. (c) 8. (a) 9. (b) 10. (b)
11. (a) 12. (a) 13. (d) 14. (c) 15. (d)

# 14

# Non-Ferrous Metals

- Introduction
- Aluminium
- Copper
- Zinc
- Lead
- Tin
- Nickel
- Exercises
- Objective Type Questions

## 14.1 INTRODUCTION

Athough the production of individual non-ferrous metals is small in comparison to the iron, the former play an important part in many engineering structure and industrial processes. The non-ferrous metals and their alloys are used despite their high cost because they provide a wide variety of properties. Some of the more commonly used non-ferrous metals are aluminium, copper, tin, zinc, lead and manganese.

## 14.2 ALUMINIUM

The principal constituents of bauxite ($Al_2O_32H_2O$) which yield aluminium on a commercial scale are hydrated oxides of aluminium and iron with some silica. Some of the other aluminium ores are corundum, kaolin or china clay, and kryolite. The ore is purifed by Bayer's process and is reduced to aluminium by Hall Hiroult's process in two stages. In the first stage bauxite is converted into alumina by roasting, grinding, heating (with sodium hydrate) and filtering. Then it is agitated for several hours to precipitate the hydrate, which is separated, washed and calcined at 1000° C. In the next stage aluminium is extracted by electrolysis of alumina in a molten bath (Fig. 14.1) of crystolite (a fluoride of alumina and sodium). A flow diagram for extraction of aluminium is shown in Fig. 14.2.

Aluminium is silver white in colour with a brittle metallic lustre on freshly broken surface. It is malleable, less ductile than copper but excels zinc, tin, and lead. Aluminium is harder than tin. Aluminium is very light, soft, strong and durable, has low thermal conductivity but is a good conductor of electricity. Aluminium can be riveted and welded, but cannot be soldered. It can be tempered at 350° C. The melting point is 657° C, tensile strength is 117.2 $N/mm^2$ in the cast form and 241.3 $N/mm^2$ when drawn into wires. Aluminium is found to be resistant

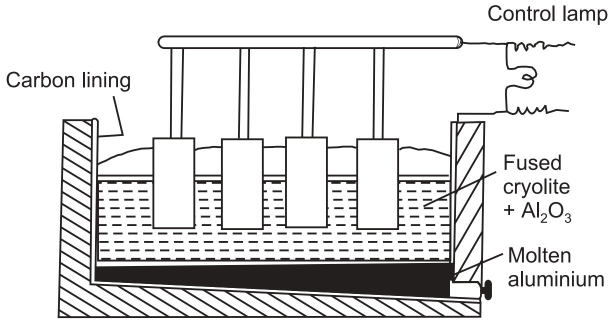

**Fig. 14.1 (a) Extraction of Aluminium by Electrolysis**

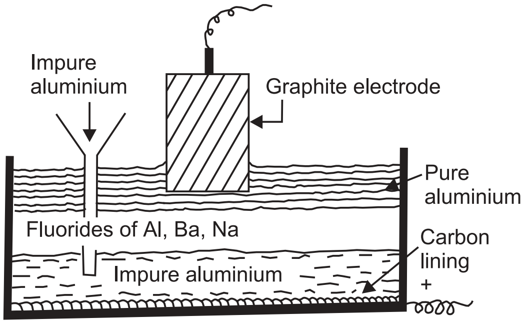

**Fig. 14.1 (b) Hoope's Cell for Refining Aluminium**

to the attack of nitric acid, dissolves slowly in concentrated sulphuic acid and is soluble in hydrochloric acid. At normal temperature it is not affected by sulphur, carbonic acid, carbonic oxide, vinegar, sea water, etc., but is rapidly corroded by caustic alkalis.

***Uses*** Pure aluminium is very soft and is unsuitable for structural purposes. Satisfactory properties are derived by alloying copper, manganese, zinc, silicon, nickel with aluminium. It is most suitable for making door and window frames, railings of shops and corrugated sheets for roofing system. Aluminium sheets are used over doors in bathrooms to protect them from getting rot and for stamping into a variety of shapes. Aluminium powder is used for making paint. Aluminium is extensively used in making parts of internal combustion engine, airplanes, utensils and packings for medicines, chocolates, etc. Alluminium alloys are widely used for the manufacture of rolled sections, such as angles, channels, I-sections, round and rectangular pipes, rivets and bolts.

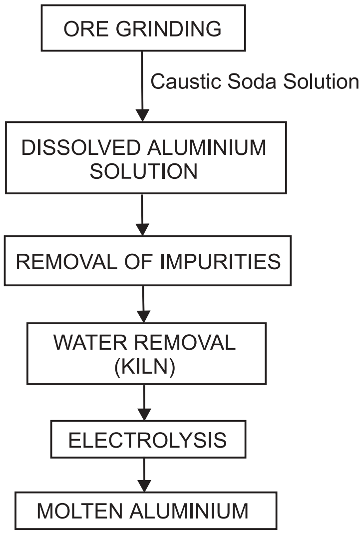

**Fig. 14.2 Flow Diagram for Extraction of Aluminium**

## Alloys

Aluminium is commonly alloyed with copper silicon, magnesium or zinc to improve its mechanincal propeties. Some aluminium alloys also contain one or more of the metals manganese, lead, nickel, chromium, titanium, beryllium. A large part of the aluminium production is utilized in making light, stiff, corrosion-resistant alloys with these metals. Aluminium alloys may be classed as the *cast alloys*, which are shaped by casting and *wrought alloys*, which are worked into different shapes by mechanical operations. Cast alloys are generally binary alloys containing copper or silicon, and sometimes magnesium. Wrought alloys contain copper, magnesium, silicon and manganese that form precipetation hardening alloys with aluminium. Following are some of the aluminium alloys.

***Duralumin*** contains 3–5% copper, 0.51–1% magnesium and 0–0.07% manganese. 0.3–0.6% iron and 0.3%–0.6% silica are present as impurities. The relative density is 2.80, which is quite low as compared to that of mild steel. However, when rolled and heat treated tensile strength equals that of mild steel. Its yield point is 206.85 $N/mm^2$. It is highly resistant to corrosion. Wire and sheets are drawn from duralumin. Duralumin may be fabricated into different structural shapes to be used for construction.

***Magnalium*** is an alloy of aluminium and magnesium (6 per cent). It has got very good mechanical properties and is a little lighter than pure aluminium. It is easy to work, exceptionally strong, and ductile and is widely used as deoxidizers in copper smelting operations.

***Aldural*** When a coating of aluminium is given to duralumin it is known as aldural and has better corrosion resisting properties.

***Y-alloy*** invented during World War II contains 4 per cent copper, 20 per cent nickel and 1.5 per cent magnesium. Toughness and hardness are achieved by heating it to 500° C for six hours and then cooling it down in boiled water. Its relative density is 2.80 and resists corrosion better than duralumin. Y-alloy has good thermal conductivity and can sustain high temperature. It is used for making pistions of I.C. engines, cylinder head, connecting rod and propeller blades.

***Aluminium Bronze*** contains less than 11 per cent of aluminium and is rather inappropriately named. It is highly ductile when aluminium is less than 7.3 per cent. As the aluminium increases, ductility decreases and at 12 per cent the alloy is very brittle. Bronzes containing less than 7.3 per cent aluminium are highly resistant to torsional stress, readily rolled, forged, cold drawn, exhibit toughness under impact and resistance to alternate bending stress.

An input of 1 per cent of maganese into 10 per cent aluminum bronze increases the yield point and ductility without change in strength or endurance under reversal of stress. The modulus of elasticity of aluminium bronze is about $1.03425 \times 10^5$ $N/mm^2$. These are almost incorrodible in sea water and in this respect are superior to Muntz metal or naval brass.

Aluminium bronze is used for pump lines, tubes, springs, screws, rivets, ornamental works, marine engineering castings, motor boat shafting, musical instruments, and as a substitute of mild steel to resist corrosion, grill works, etc.

***Light Alloy*** contains 3 per cent copper and 12 per cent zinc. It is used for castings such as crank and gear housings.

***Aluminium-Copper Alloy*** contains copper up to 4 per cent. Less liable to burning the alloy produces light castings that are stronger and tougher than that made from aluminium. It is mainly used in automobile industry for casting.

***Aluminium-Zince Alloy*** contains zince up to 15 per cent and is used for light casting which can be easily machined or forged into desired form. These are very sensitive to high temperatures in melting and in solid form exhibit low strength and brittleness when heated above 50° C. Alloys containing 15 to 25 per cent zinc are harder, stronger, but less ductile and more difficult to roll or draw. If percentage of zinc is increased above 25 the alloy suffers decrease in strength when excessively worked, either hot or cold. Aluminium zinc alloys have well defined yield points.

***Aluminium-Silicon Alloy*** Aluminium alloys containing 5 to 15 per cent silicon are important because their excellent casting qualities, including excellent fluidity and freedom from hot-shortness, permit the pouring of thin intricate sections. They also have high resistance to corrosion, are good conductors of heat, and have low thermal expansion.

## 14.3 COPPER

Copper is extracted form ores, e.g., copper pyrite, such as, chalcopyrite ($CuFeS_2$, 34.5 per cent copper), malachite ($CuCO_3 + Cu(OH)_2$, 57.3 per cent copper) and copper glance ($Cu_2S$, 79.8 per cent copper). Nearly all the copper is extracted by smelting. After calcining the ore it is mixed with silica and coke. Then it is oxidized in Bessemer converter where removal of major portion of iron and sulphur compounds is effected. The crude copper thus produced is known as *blister copper* which is cast into small pigs. The blister copper contains many impurities and is refined in the reverberatory finance (Fig. 14.3) or by electrolysis.

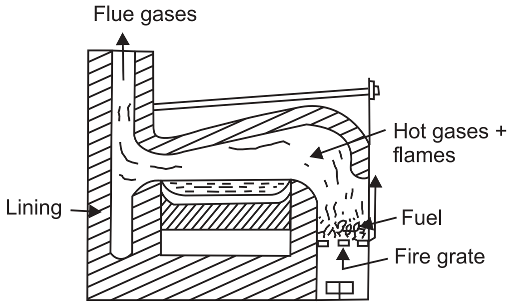

**Fig. 14.3 Roasting of Copper-Pyrite Ore in Reverberatory Furnance**

In reverberatory furnance the sulphides are oxidized and the cuprous oxide exerts cleansing action on the base metals in the crude copper. A larger excess or a deficiency of cuprous oxide in the copper makes it weak and brittle which make it necessary to remove any excess which remains after the impurities have been skimmed off. This is achieved by the addition of charcoal and green wood to the bath. Fire refining imparts malleability, toughness and ductility. Electrolytic refining is used when pure grade copper is required for electrical purposes, and where there is a considerable quantity of gold or silver associated with the crude copper.

***Properties*** Copper is a bright shining metal of reddish colour which turns greenish on exposure to weather. Copper is malleable and ductile and can be worked in hot and cold conditions. It is not weldable, except on red heat. It is soft and good conductor of heat and electricity. The electrical resistivity of copper having less than 0.1 per cent non-metallic impurities lies between 0.155–0.159 ohm per metre gram at 20° C. The resistivity increases with the content of impurities and with amount of wire drawing. Its tensile strength is high.

***Uses*** Copper is extensively used for electrical purposes, tubes for condensers and for other conductors which must withstand corrosion. In buildings copper is used for roofing, sheeting and damp proofing. Its use is restricted in the appliances and connections used for water supplies in houses.

## Alloys

The alloying elements most frequently used with copper are zinc, tin, and lead. Some of the important alloys made with copper are brass and bronze.

***Brass*** is an alloy 60–90% copper and 10–40% zinc. The colour is silvery-white for low content of copper and copper-red for higher copper content.

Brass may be either cast or wrought. Brass for castings usually contains 30–40% zinc. Tin (2–3%) when added increases hardness but decreases ductility. An addition of about 2 per cent lead renders brass easy to turn, file and polish but ductility and strength are reduced. Aluminium (1–6%) when added raises the strength but decreases the ductillity. Cast brasses are stronger and more ductile than either of their components, copper and zinc. Compared to copper its electrical conductivity is quite low.

The zinc content is 37–45% for brasses suitable for forging, rolling or extruding and hot working. Brasses used for extruding contain 2–4% lead to make them flow easily through dies. Lead, however, lessens the amount of reduction in working, which these alloys will withstand without cracking, makes the metal more susceptible to bruning during melting. The brasses brought into shape by cold working have copper to zinc ratio 2:1 and 3:1, the former being used for making sheets, wires and stamped and drawn articles.

Brasses with copper to zinc ratio 1:1 are used for brazing brass goods. They have a very high crushing strength but are too brittle for mechanincal working.

Alloys containing 57–63% copper are called Muntz metals also known as *yellow metals*. These are used for making bolts, rods, tubes and extruded shapes. Alloys having 70–75% copper are used for making cartridge cases, condenser tubes and spinning operations. With 80–85% copper the brasses take a good polish resembling gold and are used for making medals and artificial jewellry.

***Manganese Bronze*** contains small percentage of tin (0.5–1.5%), iron (0.51.0%), manganese (< 0.5 per cent) and lead (< 0.2 per cent). On account of its high strength (551.1.6 $N/mm^2$ in tension), the facility with which it can be rolled or forged, and its resistance to salt water, manganese bronze is extensively used in marine engine, propeller blades and condenser tubes.

***Naval Brass*** has same coposition as that of manganese bronze except it does not contain manganese and iron. It is slightly weaker but more ductile than manganese bronze.

***Sterro Metal*** is brass containing 38 per cent zinc and 1.5–2.0% iron and copper. It is used for hydraulic cylinders working under heavy pressure.

***Delta Metal*** contains 50–65% copper, 50–30% zinc, 0.1–5% iron and 0.1–1% tin and is as strong as mild steel having a tensile strength of 413.7–551.6 $N/mm^2$.

## Bronze

Bronze is an alloy of copper and tin with one or more additional metal. When copper (95 per cent) is alloyed with tin (5 per cent) the bronze is known as *coinage bronze* used for making coins. Copper (88 per cent), tin (10 per cent) and zinc (2 per cent) results in *Gun metal* used for making valves and bearings. *Bell metal* is produced by alloying copper (65–45%) to zinc (35–20%) and nickel (5–35%). It is used for making utensils, fittings and electric goods.

***Zinc Bronze*** It contains 59 per cent copper, 39 per cent zince and 2 per cent tin. The tensile strength of such a casting is 413.7 N / mm$^2$. It is too brittle, however, to be of much value.

***Phosphor Bronze*** is an alloy of copper and tin with phosphorus as a deoxidizer. For malleability tin and phosphorous should not exceed 4 per cent and 0.1 per cent, respectively. Phosphorous up to 4 per cent increases hardness and brittleness. If added in excess the product becomes useless.

***Lead Bronze*** contain copper, tin, phosphorous (<1.0 per cent) and lead (< 3.0 per cent). It is most suitable for making bearings. When lead is more than 4 per cent, bronze segregates forming soft spots in the hard matrix which rapidly wears and forms cavities for the lubricant.

***Copper-Beryllium Alloys*** These alloys posses exceptional strength, good resistance to corrosion, fair electrical activity, and high wear resistance. They are used for springs, gears, electric contacts, bearings, and for, tools such as chisels and wrenches. These alloys contain about 2 per cent beryllium, and in some alloys addition of 0.35 per cent nickel or cobalt may be made to refine the grain structure.

## 14.4 ZINC

The main source of zinc is the sulphide ore zinc blende or black jack (ZnS, 67 per cent zinc). The other ores for extraction of zinc are zinc carbonate, calamine ($ZnCO_3$, 52 per cent zinc) and zinc silicates-hemimorphite and willemite. The sulphide ore is finely ground and calcined in reverberatory furnace until nearly all the sulphur is expelled. Carbonate ores and silicate ores are often calcined in shaft furnace before being distilled. Ore containing impurities of iron is broken to small pieces and calcined to powder and iron is removed by electromagnet. Zinc is extracted either by distillation or by electrolysis. The ore is mixed with coal or coke and kept in retort (Fig. 14.4). By carefully controlling the temperature of the retort to white heat, carbon monoxide is produced and the zinc is relieved of its oxygen. Zinc is collected and cooled to liquid form in condensers. From time to time molten zinc is tapped from condensers, skimmed and poured into moulds. The zinc so cast is known as *spelter*.

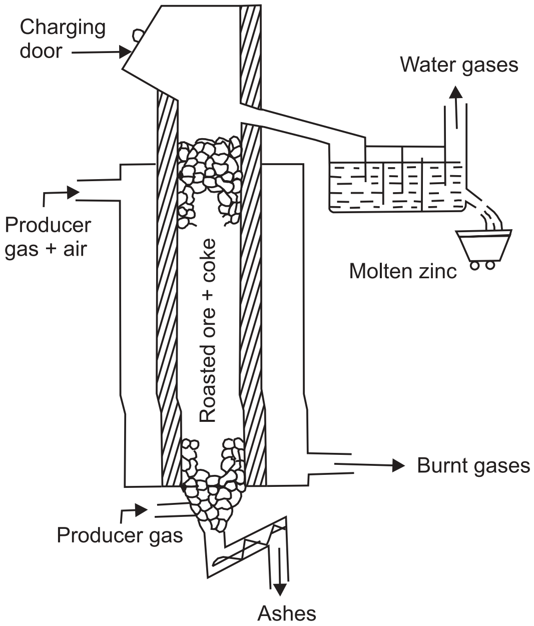

**Fig 14.4 Vertical Retort Furnace for Extraction of Zinc**

***Properties*** The most important property of zinc is its resistance to atmospheric corrosion. Ductility is good and it can be deformed into desired shapes. Lead (< 0.1 per cent) makes the spelter roll easier, however, it softens, weakens and ductility is reduced. Iron and cadmium embrittle and harden zinc and are, therefore, a detriment in spelter which is to be rolled or used for galvanising. They should not exceed 0.02 per cent. Zinc, either rolled or cast, shows no well defined yield point.

***Uses*** It is used to produce brass, German silver, some of the bronzes, as a protective coating on iron and steel, boiler tubes, fruit jar covers and cans for resisting corrosion and for negative pole pieces of batteries.

## 14.5 LEAD

Mainly used in its pure form, lead is the densest, softest and the weakest metal. The principal ore is lead sulphide, galena (PbS, 86.6 per cent lead). Lead is extracted by reducing the sulphur content by roasting the raw ore in pots or sintering it in shallow pallets (Fig. 14.5). It is then smelt in a blast furnace (Fig. 14.6) along with flux and coke. Lead, zinc, copper, arsenic, etc., are taken out of the blast furnace and seperated atrernately on the basis of their different melting points.

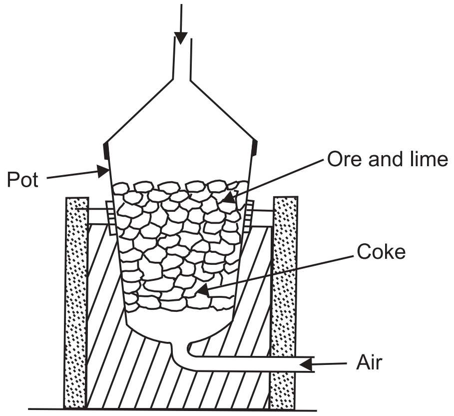

**Fig. 14.5 Roasting of Lead Ore in Sinterer**

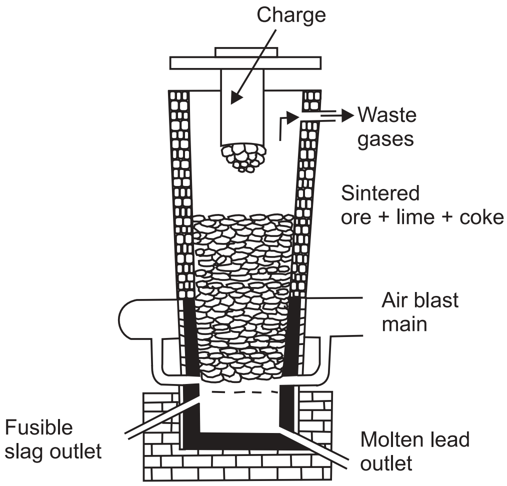

**Fig. 14.6 Smelting of Galena in Blast Furnace**

***Properties*** Pure lead can be scratched even with finger nail, highly malleable and can be rolled, into thin foils. It has a blue grey colour and dull metallic lusture when freshly fractured. When exposed to moist air it loses lusture due to oxidation. Its relative density is 11.34 and melting temperature is 327° C. The softness and specific gravity of lead are reduced because of the impurities such as antimony, arsenic, zinc and copper. Magnesia (2 per cent) raises the hardness abruptly.

***Uses*** It finds its principal use in paints as base, lead pipes and joints in sanitary fittings and in batteries.

### Alloys

Some of the important lead alloys are as follows:

***Lead Antimony Alloy*** also known as high lead alloy is made by alloying 15–20% antimony with lead. The antimony serves as hardener and the alloy so produced is used for making bearings. Lead antimony tin alloys containing 10–20% antimony, 5–20% tin and the remainder lead are used for bearings subjected to moderate loads. *Mangolia metal* is one of the common bearing metal of this class. Theses are also used for type metal.

***Lead Tin Alloys*** are used in making solder and toys. By adding tin to lead the strength and hardness are considerably increased. The alloy carrying more than 50 per cent lead remains pasty over a considerable range of temperature before solidifying. It is suitable for plumbers solder. Additions of tin to lead increase the strength and hardness.

***Fusible Alloy*** A wide variety of compositions are used to obtain alloys that melt at specific low temperatures. These are frequently binary or ternany alloys of lead, tin, bismuth, cadmium. Considerable use of these alloys is made in automatic sprinkles systems, fire alarms and safety devices to prevent overheating.

## 14.6 TIN

It is extracted from black oxide of tin, casseterite ($SnO_2$,78.6 per cent tin). Tin is extracted from the ore by crushing, roasting and melting to a temperature of about 1000° C in a way similar to that of coppers.

***Properties*** Tin is a silvery-white, lustrous, and extremely malleable metal. It is so soft that it can be cut by a knife. Its specific gravity is 7.3 and it melts at 232° C. It is harder, more ductile and stronger than lead. Tin is as ductile as soft steel. It is highly resistant to corrosion and has low tensile strength.

***Uses*** Sheets coated with tin are used to make cans, utensils and furnace pipes. Sheets coated with lead-tin alloy are used for roofing. Tin is also used for making bronze and other alloys.

### Alloys

The important tin alloys are solder, babbitt metal, white metal, and pewter.

***Solder*** It is obtained by alloying tin with antimony (0.5–3%), lead (5–40%) and tin (40–95%). These have low melting points. Solder is used for joining copper, lead, tin, iron, zinc, etc.

***Babbitt Metals*** These are alloys with tin base containing small proportions of copper and antimony. These are used for making bearings.

***White Metal*** It is an alloy of tin, lead and antiomoy with copper in varying proportions. It is used for making bearings. This bearing metal accommodates itself for any defect in the alignment of bearings.

***Pewter*** It is an alloy of tin 75 per cont and lead 20–25%. It has high corrosion resistance.

## 14.7 NICKEL

Nickel is generally extracted from pyrite or silicate ores.

***Properties*** A brittle metal approaching sliver in colour nickel takes good polish and at ordinary temperatures does not tarnish or corrode in dry air. It has specific gravity 8.30, when cast and 8.70, when rolled. Its melting point is 1500° C. It is almost as hard as soft steel far more malleable, and when rolled and annealed, is somewhat stronger and almost as ductile. Nickel resists alkaline corrosion, but gets readily dissolved in nitric acid and aquaregia. The presence of carbon, arsenic, sulphur leads to brittleness. Small amounts of magnesium render it more ductile whereas iron makes it hard.

***Uses*** Nickel is used in making nickel steels, coin, German silver, wires, as catalyst and for moisture-proof packings. Nickel is widely used as an alloying element in steel and cast iron and as an electro-deposited coating over steel to give corrosion protection. Nickel is also used to form alloys with such elements as copper, chromium and iron.

### Alloys

The various alloys of nickel are designed to have certain characteristics such as a high degree of toughness, corrosin resistance, oxidation resistance, low creep rate at high temperatures, and good properties at very low temperatures. Some of the important nickel alloys are as follows:

***Monel Metal*** is made by alloying copper with nickel. These are used where high strength, pressure tightness, high resistance to corrosion and wear is required. They are widely used in marine, chemical, power, electrical, and oil-refinery equipments.

***Hoste Alloys*** are alloys consisting principally of nickel, molybdenum, and iron. These are resistant to a wide variety of non-oxidizing acids and salts.

***Inconel*** consist principally of nickel, chromium, and iron. These have high resistance to corrosion and to oxidation at high temperatures.

## EXERCISES

1. Describe manufacture, properties and uses of:
   (a) Copper (b) Aluminium (c) Lead
2. Give the properties and uses of following:
   (a) Tin (b) Nickel (c) Zinc
3. Describe the extraction, properties and uses of any three non-ferrous metals. Describe also their alloys and uses.
4. Discuss the use of non-ferrous metals as building materials.
5. What is the difference between ferrous and non-ferrous metals? Give two examples of each type and state their properties and uses.
6. Write notes on:
   (a) Brazing (b) Soldering (c) Annealing
7. What is an alloy? Describe the properties and uses of brass and bronze.
8. Describe the following:
   (a) Gun metal (b) Monel metal (c) White metal
   (d) Yellow metal (e) German silver (f) Pewter

# OBJECTIVE TYPE QUESTIONS

1. Aluminium can be
   1. riveted   2. welded   3. soldered

   Of the above

   (a) 2 and 3 are correct   (b) 1and 2 are correct

   (c) 1 and 3 are correct   (d) 1, 2 and 3 are correct
2. Consider the following with regards to aluminium
   1. It is resistant to the attack of nitric acid
   2. It dissolves slowly in concentrated sulphuric acid
   3. It is soluble in hydrochloric acid

   Of these

   (a) only 1 is correct   (b) only 3 is correct

   (c) 2 and 3 are correct   (d) 1, 2 and 3 are correct
3. Addition of which of the following metal reduce(s) the ductility of brass
   1. Lead   2. Tin   3. Aluminium

   (a) 1 and 2   (b) 2 and 3   (c) 3 and 1   (d) 1, 2 and 3
4. Match List-1 (Alloy metal) with List-II(Application / characteristic) and select the correct answer using the codes given below the lists:

| | *List-I* | | *List-II* |
|---|---|---|---|
| A. | Alluminium alloy | 1. | Buliding flashing and damp proof |
| B. | Copper | 2. | Radiation shielding |
| C. | Zinc | 3. | Lightning conductor |
| D. | Lead | 4. | Low density and high resistance to corrosion |

**Codes:**

| | A | B | C | D | | A | B | C | D |
|---|---|---|---|---|---|---|---|---|---|
| (a) | 3 | 4 | 2 | 1 | (b) | 4 | 3 | 2 | 1 |
| (c) | 3 | 4 | 1 | 2 | (d) | 4 | 3 | 1 | 2 |

5. Which of the folowing pairs is matched correctly?

| | | |
|---|---|---|
| (a) | Aluminium | Vertical retort furnace |
| (b) | Copper | Bayer’s process |
| (c) | Zinc | Reverberatory furnace |
| (d) | Lead | Blast furnace |

6. Y-alloy is an alloy of aluminium and

   (a) copper   (b) nickel

   (c) zinc   (d) tin
7. Brass is an alloy of

   (a) copper and zinc   (b) copper and tin

   (c) copper and aluminium   (d) zinc and tin
8. The alloy used as plumber solder is

   (a) y-alloy   (b) duralumin

   (c) lead-tin alloy   (d) pewter
9. Mangolia metal used for making bearings is an alloy made from

   (a) alluminium   (b) copper

   (c) lead   (d) tin

10. Which of the following is not alloy of tin?
    (a) Babbitt metal (b) Mangolia metal
    (c) White metal (d) Pewter
11. Which of the following is the densest and lightest metal?
    (a) Alluminium (b) Copper
    (c) Lead (d) Tin
12. From which of the following ore zinc is extracted?
    (a) Galena (b) Black jack
    (c) Corundum (d) Malachite
13. Ductility of nickel is enhanced rendering in it
    (a) carbon (b) arsenic
    (c) sulphur (d) magnesium

## Answer Table

1. (b) 2. (b) 3. (d) 4. (a) 5. (d) 6. (b) 7. (a) 8. (c) 9. (c) 10. (b)
11. (c) 12. (b) 13. (d)

# 15

# Ceramic Materials

## 15.1 INTRODUCTION

Ceramics refer to polycrystalline materials and products formed by baking natural clays and mineral admixtures at a high temperature and also by sintering oxides of various metals and inorganic substances having high melting point. The word is of Greek origin and derives its name from *Keromos* meaning potter's earth or clay. But, nowadays the term ceramic is applied to a wide range of silicates, metallic oxides and their combinations. Carbon, boron, silicon, certain carbides, silicates, refractory hydrides and sulphides are also considered to be ceramics. As a building material, ceramics, may include brick, stone, concrete, glass, abrasives, porcelain, high temperature refractories, etc. Clay is the most common example of ceramic materials. Magnesium oxide can withstand high temperatures (1650–2500°) without melting and is used extensively as a refractory.

Ceramics are usually hard and brittle and are in the form of amorphous (non-crystalline) or glassy solids. The bond in these materials is mixed ionic and covalent and while these can be made in single crystal forms, their more common structure is glassy. Because of covalent ionic bond the electrons are not free which makes the ceramics, thermal and electrical insulators. At low temperatures, ceramics behave elastically. However, under proper conditions of stress and temperature these deform by viscous flow.

## 15.2 CLASSIFICATION OF CERAMIC

On the basis of their internal structure the ceramics are classified as clay products, refractories and glasses. Clay products have been dealt in detail in Chapter 2. Refractories and glasses are described in the sections to follow.

## 15.3 REFRACTORIES

These materials are capable of withstanding high temperature in different industrial processes. In addition to the thermal endurance, a refractory should be able to resist the chemical action of the material being heated (molten metal slag in the case of metallurgical furnaces and the gases generated in the furnace) and withstand the mechanical load. They have high dimensional and chemical stability and do not lose their physical shape and chemical composition. Refractories confine the heat and prevent the heat loss to the atmosphere from the outside walls of furnaces. Refractories are not pure compounds and hence do not possess a sharp fusion point. Therefore, softening temperature is determined rather than fusion point. The ability of a material to withstand prolonged action of high temperature (1580° C and onwards) without appreciable softening under service condition is known as *refractoriness* expressed in degrees C. It is generally measured by the softening or the melting point of the material and is determined by the pyromeric cone method, with the aid of tetrahedral cones or elongated pyramids, made of the same material to be tested, the size being 20 mm base and 40 mm height. They are heated until they soften and bend to touch the base. These cones are then compared with the standard *Segar cone* of known refractoriness, kept under same thermal load. The value is known as Pyromeric Cone Equivalent (PCE). Fire-clay and high alumina clay soften gradually over a range of temperature, whereas, others silica softens over a relatively narrow range.

### Classification

#### *On the Basis of Chemical Behaviour*

*Acid refractories* combine readily with bases. Their chief constituent is silica: quartz, sand, ganister and silica bricks.

*Basic refractories* consist mainly of basic oxides: magnesite and dolomite.

*Neutral refractories* consist of materials which do not combine with either basic or acidic oxides: silicon carbide, chromite and carbon.

### On the Basis of Use

*Siliceous Refractories* containing not less than 93 per cent $SiO_2$ are used for roof, metallurgical furnaces and glass tanks. This is an acid refractory made from hard, dense quartzite and sand stone.

*Alumo-Silicate Refractories* may be semi-acid type containing silica (over 65 per cent), chamotte with 30–45 % alumina are used in brickwork, lining of furnances; alumina (less than 35 per cent) or high-alumina variety with more than 45 per cent alumina are used in glass industry for furnace brickwork. Aluminosilicate items are used to line cupolas, coke ovens etc.

*Magnesian Refractories* consist chiefly of MgO (80–85%) and their refractoriness may be as high as 2000° C. In is an important basic refractory. It finds application in extractive metallurgy.

*Chromous Refractories* are obtained from chromous iron ore blended with magnesia and alumina. Their refractoriness is 1800–2000° C and they withstand attack by iron ore slags. They are used in steel making furnaces.

*Carbonaceous Refractories* are manufactured from graphite or coke. These have refractoriness above 1700° C and are resistant to attack by molten slags.

### Properties

Refractories are capable of withstanding high temperatures, thermal shocks and rough usage. The expansion and contraction of these materials is minimum. They are chemically inactive at high temperatures and are resistant to the fluxing action of slags and corrosive action of gases. Refractories are good thermal insulators and have low electrical conductivity.

## 15.4 GLASS

Glass is an amorphous substance having homogeneous texture. It is a hard, brittle, transparent or translucent material. It is the most common material glazed into frames for doors, windows and curtain walls. The most common types used in building construction are sheet, plate, laminated, insulating, tempered, wired and patterned glass. Most ordinary colourless glasses are alkali-lime silicate and alkali-lead silicate with tensile and compressive strengths of about 30–60 $N/mm^2$ and 700–1000$N/mm^2$, respectively and modulus of elasticity in the range $0.45 \times 10^5$ to $0.8 \times 10^5$ $N/mm^2$. The strength is very much afftected by internal defects, cords and foreign intrusions. The main shortcoming of glass is its brittleness which depends on a number of factors, the chief one being the ratio of the modulus of elasticity of the material to its tensile strength.

### Constituents

The raw materials used in manufacturing glass are sand, lime (chalks) and soda or potash which are fused over 1000° C. Oxides of iron, lead and borax are added to modify hardness, brilliance and colour. The functions of the various ingredients are as follows.

*Silica* is used in the form of pure quartz, crushed sandstone and pulverised flint; should be free from iron contents for best quality glass. Since it melts at very high temperatures (1710° C) carbonates of sodium or potassium are added to lower down the fusing temperature to about 800° C. These also make liquid silica more viscous and workable.

*Lime* is used in the form of limestone, chalk or pure marble and sometimes marl. The addition of lime makes the glass fluid and suitable for blowing, drawing, rolling, pressing or spinning. It also imparts durability and toughness to glass. Excess of lime makes the molten mass too thin for fabrication.

*Soda* acts as an accelerator for the fusion of glass and an excess of it is harmful.

*Potash* renders glass infusible and makes glass fire resistant.

*Lead Oxide* imparts colour, brightness and shine. When 15–30% of it added to substitute lime it lowers the melting point, imparts good workability, while its transparency is lost with the glass becoming brittle and crystalline.

*Cullets* are broken glasses added to act as a flux to prevent loss of alkali by volatisation during the process of forming glass and also to lower the fusion temperature. However, flux may reduce the resistance of glass to chemical attack, render it water-soluble or make it subject to partial or complete devitrification (crystallisation) on cooling. These crystalline areas are extremely weak and brittle. Stabilizers are added to overcome these defects.

*Titanic acid, oxides of Nickel and Cobalt* are used for chromatic neutralisation.

***Note:*** Iron is not desirable as a constituent. However, when present it imparts a bottle green colour to the glass. To overcome this manganese dioxide known as glass maker's soap is added which washes the liquid glass and removes the colour.

## Manufacture

Glass is manufactured in the following four steps:

***Melting*** The raw materials — lime, soda and sand — separately cleaned, ground, sieved (called 'Batch') in definite proportion and mixed with water are fused in a continuous type (tank) furnace or batch-type (pot) furnace. The charge in the first stage melts, forming a bubbly, sticky mass, and as the temperature is raised (1100° C–1200° C) it turns to a more watery liquid and the bubbles rise to the surface. The melting process in case of ordinary soda-glass involves the following series of reactions:

$$CaCO_3 + SiO_2 \longrightarrow CaSiO_3 + CO_2\uparrow$$

$$Na_2CO_3 + SiO_2 \longrightarrow Na_2SiO_3 + CO_2\uparrow$$

When all the carbon dioxide has escaped out of the molten mass, decolourisers such as $MnO_2$ or nitre are added to do away with ferrous compounds and carbon. The colouring salts are added at this stage. Heating is continued till the molten mass is free from bubbles and glass balls. As the glass cools (800° C), it is ready to be drawn or floated to its desired thickness and size at the other end of the furnace as shown by a flow diagram in Fig.15.1.

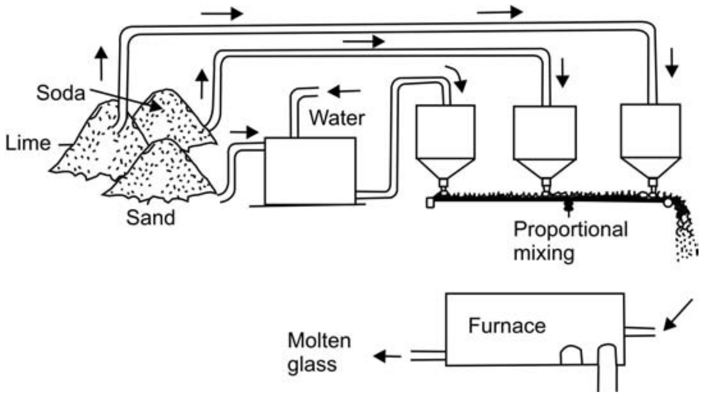

Fig. 15.1 Glass Manufacturing Process

***Forming and Shaping*** The molten glass can be fabricated to desired shapes by any one of the following methods:

*Blowing* A 2 m long and 12 mm diameter blow pipe is dipped in the molten glass and taken out. It is held vertically and is vigorously blown by the operator. The sticking molten glass takes the shape of a hollow ball. On cooling it is reheated and the blowing operation repeated a number of times till the desired articles are ready.

*Flat Drawing* The process of drawing the glass up into a sheet begins when an grille (bait) is lowered into the glass in the kiln. In a short time the liquid molten glass adheres to the bait, and as the bait is slowly lifted it draws a sheet of glass. The bait and the drawn sheet of glass are then drawn through rollers, the bait is cracked off and a continuous sheet of glass is drawn up. This sheet is then slowly cooled in a chamber and annealed for cutting into proper size. A machine for vertical drawing of glass is shown in Fig. 15.2.

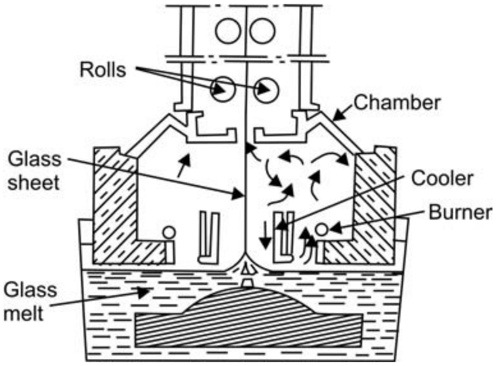

**Fig. 15.2 Machine for Vertical Drawing of Glass**

*Compression Moulding* In this process moulds are used to obtain the articles of desired shapes.

*Spinning* A machine is used to spin the molten glass. The fibres so produced are very fine and are used for heat and sound insulation.

*Annealing* Glass articles are allowed to cool under room temperature by passing through different chambers with descending temperature. If cooled rapidly, the glass being bad conductor of heat, the superficial layer cools down first and strain develops in the interior portions, which causes unequal expansion and the articles are likely to crack.

*Finishing* After annealing the glass articles are cleaned, ground, polished, cut and sand blasted.

## Classification

Depending upon the constituents glasses are classified as soda-lime glass, lead glass and boro-silicate glass.

***Soda-lime Glass*** is also known as *soda-ash glass*, *soda glass* or *soft glass*. Soda-lime glass is obtained by fusing a mixture of silica, lime and soda. The quality of this glass can be improved by adding alumina and magnesium oxide and the glass is then called *crown* glass. This is the most common type of glass used in doors, windows and for making glass-wares such as bottles.

***Lead Glass*** also known as *flint* glass is obtained by fusing a mixture of silica, lead and potash. It is free from iron impurities and is colourless. Lead glass has high shining appearance and can take polish. It is not affected by temperature. Electric bulbs, optical glasses, cut glass, ornamental glass works and radio valves are some of the articles made from it.

***Boro-silicate Glass*** is obtained by fusing a mixture of silica, borax, lime and felspar. The examples are *pyrex* glass and *heat resisting* glass. Boro-silicate glass can withstand high temperatures and is most suitable for making laboratory equipments and cooking utensils.

## Commercial Forms

***Sheet Glass*** is used for glazing doors, windows and partitions and is obtained by blowing the molten glass into the shape of a cylinder. The ends of the cylinder so produced are cut away and the cylinder is flattened over a plane tray. It is available in thicknesses of 2, 2.5, 3, 4, 5, 5.5 and 6.5 mm and up to 1750 × 1100 mm size and is classified as

| Type | Uses |
|---|---|
| Ordinary glazing quality | General engineering purpose |
| Selected glazing quality | Class works |
| Special selected quality | Superior quality works such as show cases and cabinets etc. |

***Plate Glass*** is used for all engineering purposes and is superior to sheet glass. A plate glass differs from a sheet glass in that it has a parallel, distortion-free surface obtained by grinding or floating process. It is produced by pouring the molten glass on casting tables and levelling it to an uniform thickness. Both the glass surfaces are then ground, smoothened and polished. Glass so produced is clear and contains unblemished true plane surfaces and is available in thicknesses of 3 to 32 mm and sizes up to 2750 × 900 mm. It is classified as

| Type | Uses |
|---|---|
| Ground glass quality | Showcases, cabinets, counters, shop fronts, etc. |
| Selected glazing quality | Making mirrors |
| Special selected quality | High class works, wind screen of vehicles |

***Tempered Glass*** is made from plate glass by reheating and sudden cooling and is 3 to 5 times stronger than plate glass. Although not unbreakable, it resists bending stress better than plate glass and, when broken, the pieces are relatively small in size. It is used extensively in sports arenas, sliding doors and curtain walls.

***Wired Glass*** is produced by embedding wire nets 0.46 to 0.56 mm into the centre of sheet glass during casting. The minimum thickness of wired glass is 6 mm. When broken it does not fall into pieces. It has higher melting point than ordinary glass. Wired glass is used for fire resisting doors and windows, for sky lights and roofs. A special example of this is wired-refrax glass which transmits 100 per cent more light than the other glasses.

***Obscured Glass*** is made comparatively opaque to sunlight. Also known as *patterned* glass. They are classified as frosted, rolled and ribbed.

*Frosted glass* is produced by subjecting the polished face of the glass to a sand blast which grinds off the surface. It can also be produced by etching on glass by hydrofluoric acid.

*Rolled glass* has a series of waves of desired pattern on the surface and is also known as *figured* rolled glass.

*Ribbed glass* A series of triangular ribs are produced in the glass during casting.

***Laminated Glass*** is made by sandwiching a layer of polyvinyl butyral between two or more layers of plate or sheet glass. It is also lso known as *safety* glass. The examples are heat proof glass, sound proof glass and bullet proof glass.

*Heat and sound proof glasses* Two or more glass plates are sandwiched by a tinted plastic inner layer. It provides high resistance to heat and glare. By increasing the thickness of plastic layer the glass can be made more sound resistant.

*Bullet proof glass* is produced by placing vinyl plastic and glass in several alternate layers and pressing them with outer layers of glass. It is used in banks, jewellery stores and display windows.

*Insulating glass* is composed of two glass plates into which a layer of 6–13 mm thick dehydrated air is sealed. The round edges are formed by fusing together the two glass plates. These glasses reduce the heat transmission by 30–60 per cent.

***Heat absorbing Glass*** is bluish green in colour and cuts ultra violet rays of sun. The example is *calorex*. It is used in railway carriages, factories, hospitals, health clubs and kitchens.

***Ground Glass*** In this type of glass one face of plate or sheet glass is made rough by grinding. It is used for maintaining privacy by obstructing vision and at the same time allowing light. The ground glass is used for bedrooms, toilets and for making black boards.

***Block Glass*** is hollow sealed made by fastening together two halves of pressed glass. It is used for making partitions.

***Coloured Glass*** is produced by adding oxides of metals to molten glass:

| *Types of glasses* | *Metal oxide* |
|---|---|
| Ruby red glass | Lead glass, 1 per cent of cupric oxide and 1 per cent of magnetic oxide of iron |
| Ruby rose glass | Gold chloride is used as colouring agent. Brownish red colour is obtained by adding oxide of iron, bluish red shade is obtained by adding 2 per cent $MnO_2$ and –4 per cent nitre ($KnO_3$). |
| Blue glass | 0.1 per cent of cobalt oxide in ordinary glass. |
| Yellow glass | |
| (a) Uranium glass (greenish yellow) | 2–3% of alkali uranate. |
| (b) Selenium glass (orange) | Selenite and a reducing agent or ferric oxide and $MnO_2$. |
| Green glass (emerald green) | Oxide of chromium $Cr_2O_7$. |
| Violet glass (violet) | $MnO_2$ |
| Black glass | Oxide of Co and Mn. |

***Opal Glass*** is also known as *milk glass*. It is produced by adding bone ash, oxide of tin and white arsenic to vitreosil (99.5% silica glass known as clear silica glass). The composition is 10 parts of sand, 4 parts cryolite and 1 part zinc oxide.

***Enamel Glass*** is produced by adding calcined lead and tin oxide to the ordinary glass. The composition is 10 parts sand, 20 per cent lead and tin oxide and 8 parts potash.

***Optical Glass*** contains phosphorus, lead silicate and a little cerium oxide, the latter capable of absorbing ultraviolet light injurious to eyes. They are used for making lenses.

## 15.5 GLASS WOOL

When silicate rock or flint is melted (1650° C) with a small quantity of calcareous matter and the liquid is blown by steam jet (Fig.15.3), it splashes out in the form of small globules which are hurled in a large container at a great speed to cause them to be drawn into very soft and flexible fibres of not more than 10 micron diameter. The source material is glass bottle waste melted at 1300–1400° C temperature. Also known as *rock wool* it can be packed into small pads or formed into (5–6μ) boards or blankets. The fibers are chemically inert and have small apparent densities (130–240 kg/m$^3$) and a low coefficient of heat conductivity (0.43 to 0.78 mW/cm° C). Glass wool has high tensile strength and chemical resistance and, low sound and heat conductivities. Water absorption should not exceed 0.5%. They contain air in the pores forming a useful filter media for air conditioners and an insulating material for heat and sound. Glass wool may also be used as an aggregate in the manufacture of asbestos-cement items and as a fine aggregate for plastering and finishing mortars. Glass wool is also used to produce glass plastics by mixing it with polymers.

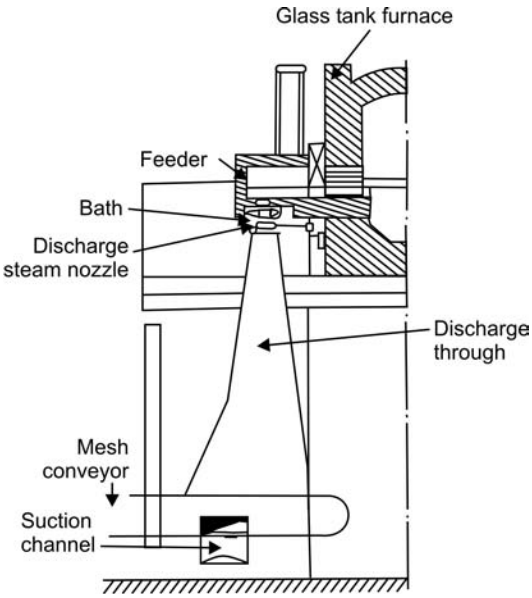

**Fig. 15.3 Manufacturing of Glass Wool by Blowing**

## 15.6 POLYMORPHISM IN CERAMIC MATERIALS

The main constituent of ceramic materials is silicate: Portland cement, glass, tiles, vitreous enamels, reinforcing glass fibres, etc. The primary unit of silicates is the $SiO_4$, tetrahedron, in which one silicon atom fits between four oxygen atoms with either ionic or covalent bond mechanism.

The tetrahedral units of silica are arranged in a hexagonal pattern at room temperature. But at 875° C the stable arrangement of silica-tetrahedral breaks to a new structure of a hexagonal pattern. Above 1940° C a third stable solid arrangement of tetrahedral in cubic pattern is formed. These three modifications are named as quartz — the low temperature mineral; tridymite — the intermediate temperature mineral and cristobalite — the high temperature mineral. However, quartz may exist as metastable phase at high temperature and tridymite and cristobalite may remain as metastable phases at room temperature.

A second type of inversion which may occur in silica is shown in Fig. 15.4. At 573° C the straightening of bonds across the oxygen takes place. This change which is rapid and spontaneous produces instantaneous volume expansion. As the quartz cools the process is reversed. Figure 15.4 represents thermal expansion of quartz. Tridymite shows two such changes in its metastable range, one at 117° C and the other at 163° C, whereas cristobalite undergoes a change similar to that of quartz at 200° C.

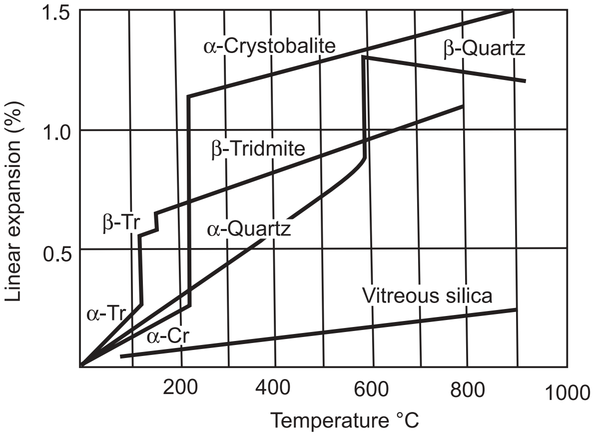

**Fig. 15.4 Thermal Expansion of $SiO_4$ Phase**

These three inversions affect the use of silica as a refractory material under conditions of rapid temperature changes where it may produce cracking or spalling.

## 15.7 MECHANICAL PROPERTIES OF CERAMIC PHASES

***Tensile Strength*** Theoretically the tensile strength of ceramics is very high but in practice it is quite low. Tensile failures of ceramics are attributed to the stress concentrations at the pores and micro-cracks at grain corners. The modulus of elasticity ranges from $7 \times 10^4$ to $42 \times 10^4$ N / $mm^2$. Glass fibres tensile strength of the order of 700 N / $mm^2$ .

***Compressive Strength*** The compressive strength is high and it is usual to use ceramics like clay, cement and glass products in compression.

***Shear Strength*** Ceramics have very high shear strength with resistance to failing in a brittle manner.

***Transverse Strength*** is difficult to ascertain and ceramics are not used in the places where such strength is the criteria.

## 15.8 THERMAL PROPERTIES OF CERAMIC PHASES

Thermal capacity, conductivity and resistance to shocks need to be considered while using a ceramic. The specific heat of fire-clay bricks is 0.250 at 1000° C and 0.297 at 1400° C, whereas for carbon bricks it is about 0.812 at 200° C and 0.412 at 1000° C. The specific heat for refractories to be used in regenerator chambers should be more. The heat in ceramics is conducted by phonon conductivity and by the interaction of lattice vibration. The ceramic materials do not have enough free electrons to bring out electronic thermal conductivity. At high temperatures, conduction takes place by transfer of radiant energy. The thermal conductivity of refractories should be minimum for linings and maximum for crucibles and retorts.

Thermal shocks are developed primarily because of expansion and contraction of ceramics. Lithium compounds are used in ceramics to improve the shock resistance. Hot pressed silicon nitride has the best thermal shock resistance whereas steatite is the most poor.

## 15.9 ELECTRICAL PROPERTIES OF CERAMIC PHASES

Ceramic materials have no free electrons so they have low electrical conductivity. However, at high temperatures the ionic diffusion is accelerated. For example glass is an electrical insulator, but in the glass melting furnace, its conductivity becomes quite high. Clay displays a very high dielectric constant—a property of material related to its behaviour when located within an electric field between two electrodes—under static conditions. However, for alternating current, the dielectric constant in clay arises from ion and electron movement.

## EXERCISES

1. (a) What are the ceramic materials? What are their properties?
   (b) Give the classification of ceramic materials.
   (c) Describe, the mechanical properties of ceramics.
2. (a) What are refractories and their types? Give examples of each of them.
   (b) Describe the thermal and electrical properties of ceramics.
   (c) Describe the polymerisation of ceramics.
3. (a) Describe the manufacturing process of glass.
   (b) What are the constituents of glass? Give the functions of each of them.
   (c) Describe the classification of glass.
4. How are the following glasses obtained?
   (a) Obscured glass (b) Milk glass
   (c)Laminated glass (d) Enamel glass
   (e) Flint glass (f) Tempered glass
5. (a) What is glass wool?
   (b) What is refractoriness and how is it measured?
   (c) Describe briefly the use of glass as a building material.
6. Describe briefly the following:
   (a) Glass wool (b) Gas glass
   (c)Foam glass (d) Pyrex
7. Describe briefly application of glass in building industry.

## OBJECTIVE TYPES QUESTIONS

1. Which of the following is not a ceramic material?
   (a) Glass (b) Clay
   (c) Lime (d) Abrasives
2. Which of the following properties ceramics do not posses?
   (a) Hardness (b) Brittleness
   (c) Elasticity at low temperature (d) Maleability
3. The tensile strength of glass may be
   (a) 10 $N/mm^2$ (b) 50 $N/mm^2$
   (c) 80 $N/mm^2$ (d) 100 $N/mm^2$
4. The accelerator added for the fusion of glass is
   (a) soda (b) silica
   (c) lime (d) nickel

5. The example of glass maker's soap is
   (a) nickel oxide (b) cobalt oxide
   (c) manganese dioxide (d) cullets
6. Crown glass is an example of
   (a) soda-lime glass (b) lead glass
   (c) boro-silicate glass (d) sheet glass
7. Which of the following glass is most suitable to withstand high temperatures?
   (a) soda-lime glass (b) lead glass
   (c) boro-silicate glass (d) tempered glass
8. The metal oxide used to make emerald green glass is
   (a) $MnO_2$ (b) $Cr_2O_7$
   (c) cobalt oxide (d) iron oxide

## Answer Table

1. (c) 2. (d) 3. (b) 4. (a) 5. (c) 6. (a) 7. (c) 8. (b)

# 16

# Polymeric Materials

## 16.1 INTRODUCTION

High polymers, also known as macromolecules, are large molecules of colloidal dimensions ($10^{-3}$ to $10^{-6}$ mm in diameter) having high molecular weight (10,000 to millions). Small molecules called monomers undergo polymerisation reaction and form macromolecules. The examples of polymeric materials are resins, plastics and rubbers.

## 16.2 POLYMERISATION MECHANISM

Polymerisation may be defined as the union of two smaller molecules of similar or different types with or without elimination of water resulting in the formation of new C-C linkages. The mechanism by which polymerisation takes place may be addition or condensation.

A monomer for polymerisation should be bi-, or polyfunctional, *i.e.*, it must contain two or more functional groups. Some of the other functional groups are hydroxyl acid, amino acid, di-amino acid, di-acids, di- or polyalcohols.

The structures depend on the functionability of monomers. In case of a bi-functional monomer there will be two reactive groups at its ends. These groups may align side by side to form a straight chain like molecule as shown in Fig. 16.1. The monomer units are linked by primary covalent bonds and the different chains are held together by secondary force of molecular attraction. However, during the chain growth side chains may also develop leading to branched chain molecules as shown in Fig. 16.2.

In case of poly-functional groups the monomer molecules are connected to each other by covalent bonds and form a three-dimensional network (Fig. 16.3).

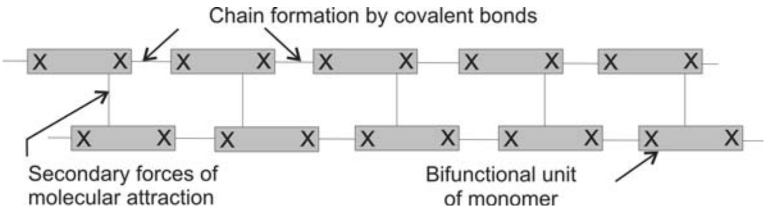

**Fig. 16.1 Linear Chain Polymer Formation by a Rection of bi-functional Moecule**

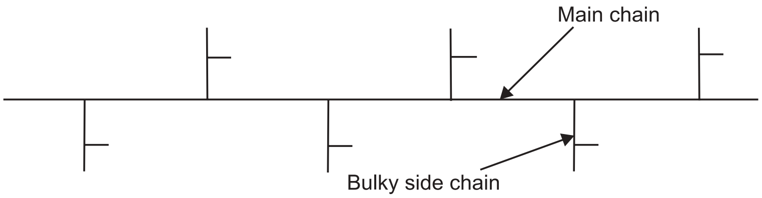

**Fig. 16.2 Branched-Chain Polymer**

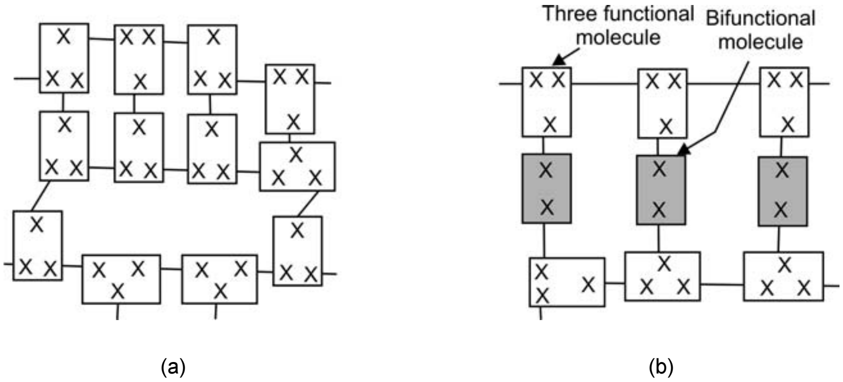

(a) (b)

**Fig. 16.3 Formation of a Three-Dimensional Network Polymer**
**(a) Reaction of Three-Functional Molecule**
**(b) Reaction between Two and Three-Dimensional Molecules**

## Addition Polymerisation

It may be defined as a reaction that yields a product which is an exact multiple of the original monomeric molecule. Such a monomeric molecule usually contains one or more double bonds, which by intermolecular rearrangement may make the molecule bi-functional.

Fig. 16.4 (a) shows ethylene polymerisation. One of its double bond is transferred to form a bond with the adjacent monomer and the resultant product is polyethylene which serves the prototype for addition polymerisation. It is commonly used in the manufacture of flexible films and squeeze bottles. Some of the other examples are shown in Fig. 16.4 (b,c).

The addition polymerisation reactions can take place only by the application of heat, light, pressure, or catalyst.

The thermal initiators are most commonly used to generate radicals to imitate polymerisation. Peroxide compounds (containing 0–0 bonds) like acetyl peroxide ($Ac_2O_2$), benzoyl peroxide ($Bz_2O_2$) and azO compounds etc. used as initiators. The initiated polymerisation process does not last indefinitely because the molecules must be available in the immediate vicinity at ends of the chains.

**Co-polymerisation** is a type of addition polymerisation where simultaneous polymerisation of two or more chemically different monomers takes place resulting in the formation of a polymer containing both monomers linked in one chain. An example is shown in Fig. 16.5.

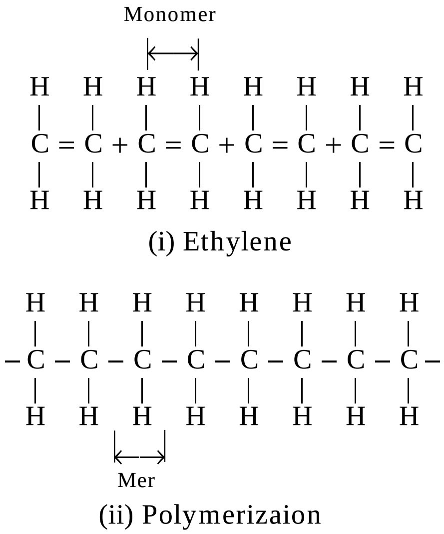

(i) Ethylene

(ii) Polymerizaion

**Fig.16.4 (a) Each Step Involves the Breaking of a Double Bond and the Formation of Two Single Bonds**

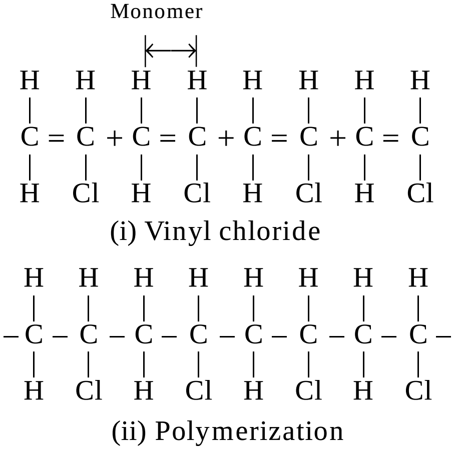

(i) Vinyl chloride

(ii) Polymerization

**Fig. 16.4 (b) Double Bonds are Necessary as with Polyetylene**

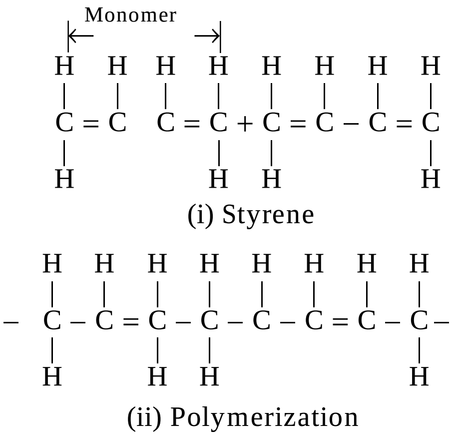

(i) Styrene

(ii) Polymerization

**Fig. 16.4 (c) Hydrogens are not Shown on the Benzene Ring in (b)**

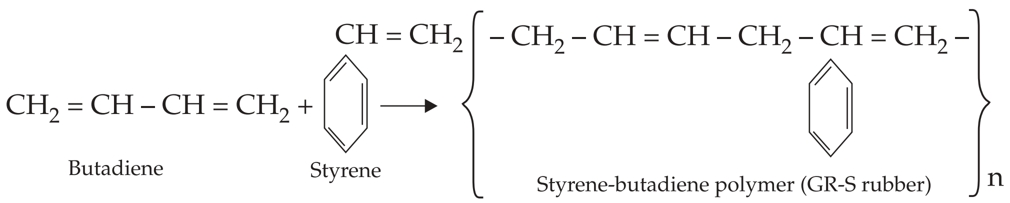

**Fig. 16.5 Styrene-Butadiene Polymer (GR-S Rubber)**

### Condensation Polymerisation

It may be defined as the reaction between functional monomer molecules leading to the formation of a polymer with the elimination of some small molecules such as water, HCl, etc. The most common is Nylon formed from hexamethylene diamine and adipic acid (Fig. 16.6 (a)). Phenol formaldehyde resin (Bakelite) shown in Fig. 16.6 (b) is another example.

$$\underset{\text{Hexamethylene diamine}}{HN_2 - (CH_2)_6 - NH} \boxed{H + HO} \underset{\text{Apidic acid}}{OC - (CH_2)_4 - COH} \rightleftharpoons$$

$$H_2O + NH_2 - (CH_2)_6 - NHCO(CH_2)_4COOH$$

$$HOOC - \underset{\text{Apidic acid}}{(CH_2)_4} - CO \boxed{OH + H} NH - (CH_2)_6 - NH -$$

$$- CO(CH_2)_4CO \boxed{OH + H} \underset{\text{Hexamethylene diamine}}{NH - (CH_2)_6 - HN} \boxed{H} \longrightarrow$$

$$- OC\,(CH_2)_4\,CONH(CH_2)_6NHCO(CH_2)_4CONH(CH_2)_6NH -$$

$$[-OC(CH_2)_4CONH(CH_2)_6NH-]_n$$

**Fig. 16.6 (a) Polyhexmethylene Adipamide (Nylon 6:6)**

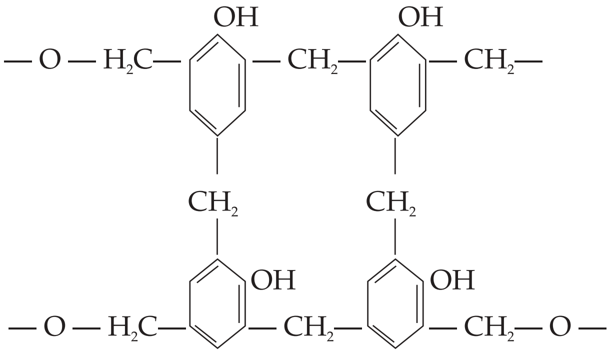

**Fig. 16.6 (b) Bakelite Plastic**

## 16.3 DEPOLYMERISATION

Also known as degradation, depolymerisation may occur when used for extended period of time with steam as in the case of urea-formaldehyde plastic or due to thermal variations disrupting the intramolecular bonds within the molecules of plastic formed at high temperatures.

Depolymerisation is used to its advantage for cracking petroleum into highly combustible products, light molecules charring of carbohydrates (toast) and of cellulose (charcoal).

## 16.4 RUBBERS

Rubbers also known as elastomers, are high polymers having the unique property of undergoing large deformations under load and returning to their original shape and dimension on its removal owing to lengthening and shortening of the springs of polymeric chains (elastomer molecule is not straight chained but is in the form of coil) as shown in Fig. 16.7.

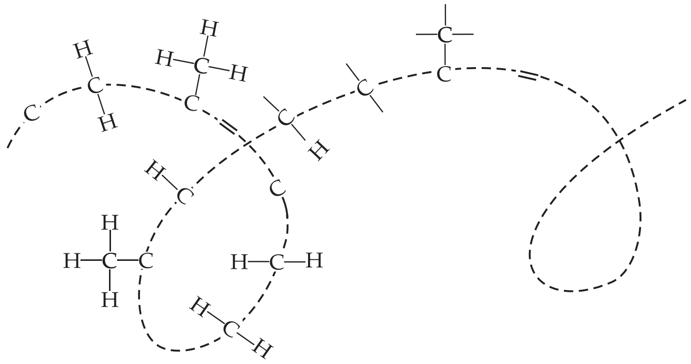

**Fig. 16.7 Schematic Representation of Coiled Elastometer Chain of Natural Rubber (Polyisoperene)**

The unstretched rubber molecule is amorphous. In stretching, the macromolecules in it get partially aligned with respect to one another causing crystallisation. Consequently the material gets stiffened due to increased attractive forces between the molecules. On releasing the stress the chain regains its original coiled state and the material again becomes amorphous.

## Classification

Rubber can be classified as natural, synthetic and rubber like plastic.

***Natural Rubber*** consists of basic material latex, dispersion of isoprene, which polymerises to form long coiled chain of polyisoperene (Fig. 16.8). It is made from the sap occurring in cells of the various parts of the plants such as have a brasiliansis and gauyile.

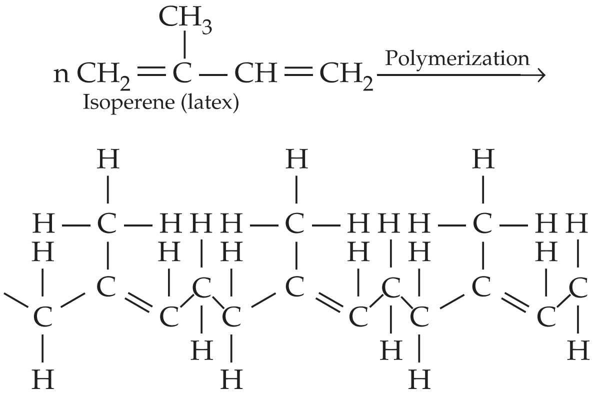

$$\underset{\text{Isoperene (latex)}}{n\,CH_2=\overset{\overset{\displaystyle CH_3}{|}}{C}-CH=CH_2}\xrightarrow{\text{Polymerization}}$$

**Fig. 16.8 Polyisoperene (Natural Rubber)**

The latex is obtained by making incisions in the bark of the rubber tree, allowing the sap to flow out. It is collected and diluted to contain 15–20% of rubber and then strained to remove any dirt. Thereafter the rubber is coagulated by adding acetic or formic acid. The coagulated rubber is then treated to produce crude rubber known as *crepe rubber* and *smoked rubber* which is further processed, milled and vulcanized to produce commercial rubber.

***Crepe Rubber*** is produced by coagulating rubber in the presence of retarder like sodium bisulphite. Then it is passed between the rollers of creping machine where most of the serum is squeezed out and a sheet resembling crepe paper is formed.

***Smoked Rubber*** is prepared by pouring diluted latex into tanks having sides with vertical grooves. Diluted formic or acetic acid is added and stirred. The partition plates are inserted in the grooves and left for about 16 hours. The slabs so formed are removed and passed through series of rollers with decreasing clearances. The sheets are kept for four days in a smoke house having a temperature of 40–50° C.

***Synthetic Rubber*** is based on the model of natural rubber and thermoplastic vinyl high polymers. The possible number of synthetic rubbers are unlimited. It is so because all straight-chain polymers can be made to specific requirements to produce rubber like properties. However, the cheap price and easy availability of natural rubber has suppressed the demand of synthetic rubber. The term synthetic rubber for rubber like materials prepared synthetically is a misnomer; the more appropriate term is elastsmer. Some of the synthetic rubbers are shown in Fig. 16.9.

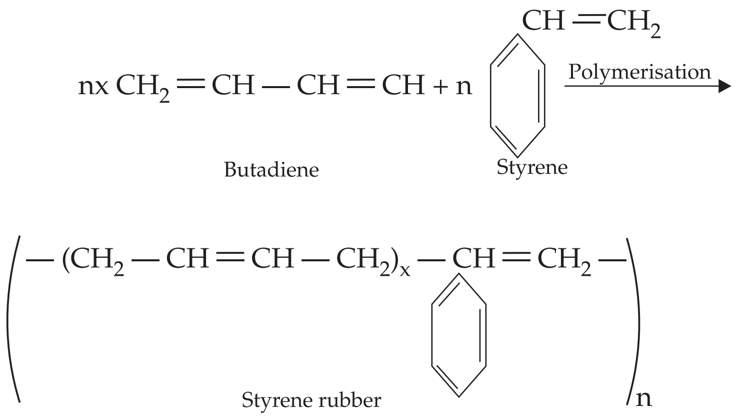

**Fig. 16.9 (a) Styrene Rubber**

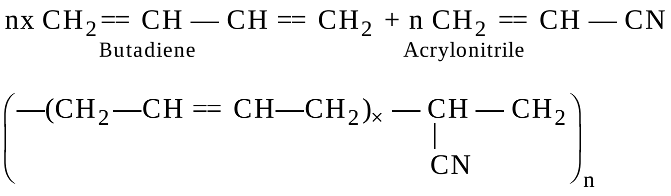

$$nx\,\underset{\text{Butadiene}}{CH_2{=}CH-CH{=}CH_2} + n\,\underset{\text{Acrylonitrile}}{CH_2{=}CH-CN}$$

$$\left(-(CH_2-CH{=}CH-CH_2)_x-\underset{\substack{|\\ CN}}{CH}-CH_2\right)_n$$

**Fig. 16.9 (b) Nitrile Rubber**

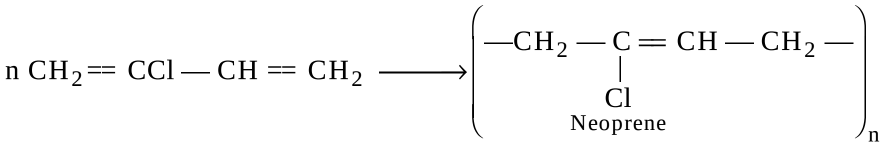

$$n\,CH_2{=\!=}\,CCl-CH{=\!=}\,CH_2 \longrightarrow \left(\underset{\text{Neoprene}}{-CH_2-\underset{\underset{\displaystyle Cl}{|}}{C}=CH-CH_2-}\right)_n$$

**Fig. 16.9 (c) Neoprene**

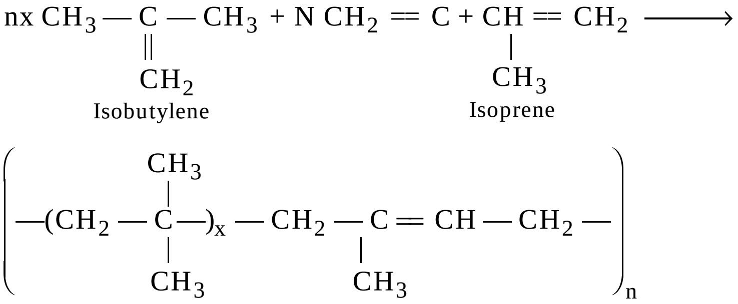

$$nx\,\underset{\text{Isobutylene}}{CH_3-\underset{\underset{\displaystyle CH_2}{\|}}{C}-CH_3} + N\,CH_2 {=\!=}\, C + \underset{\underset{\underset{\text{Isoprene}}{\displaystyle CH_3}}{|}}{CH} {=\!=}\, CH_2 \longrightarrow$$

$$\left(-(CH_2-\overset{\overset{\displaystyle CH_3}{|}}{\underset{\underset{\displaystyle CH_3}{|}}{C}}-)_x-CH_2-\underset{\underset{\displaystyle CH_3}{|}}{C}=CH-CH_2-\right)_n$$

**Fig. 16.9 (d) Butyl Rubber**

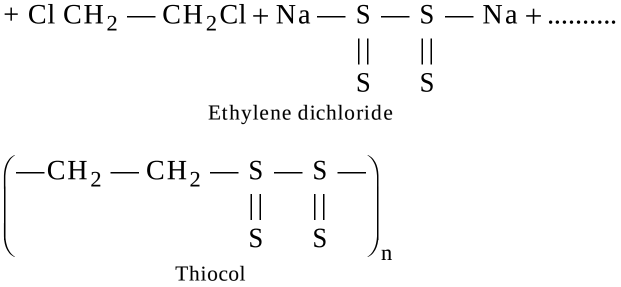

$$+\,Cl\,CH_2-CH_2Cl+Na-\underset{\underset{\displaystyle S}{\|}}{S}-\underset{\underset{\displaystyle S}{\|}}{S}-Na+\ldots\ldots\ldots$$

$$\text{Ethylene dichloride}$$

$$\left(-CH_2-CH_2-\underset{\underset{\displaystyle S}{\|}}{S}-\underset{\underset{\displaystyle S}{\|}}{S}-\right)_n$$

$$\text{Thiocol}$$

**Fig. 16.9 (e) Thiocol**

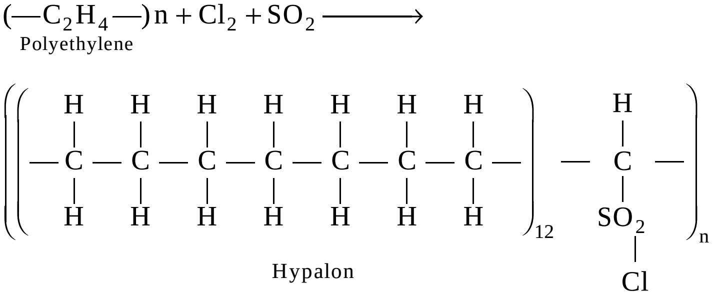

$$\underset{\text{Polyethylene}}{(-C_2H_4-)n}+Cl_2+SO_2\longrightarrow$$

$$\left(\left(-\overset{\overset{\displaystyle H}{|}}{\underset{\underset{\displaystyle H}{|}}{C}}-\overset{\overset{\displaystyle H}{|}}{\underset{\underset{\displaystyle H}{|}}{C}}-\overset{\overset{\displaystyle H}{|}}{\underset{\underset{\displaystyle H}{|}}{C}}-\overset{\overset{\displaystyle H}{|}}{\underset{\underset{\displaystyle H}{|}}{C}}-\overset{\overset{\displaystyle H}{|}}{\underset{\underset{\displaystyle H}{|}}{C}}-\overset{\overset{\displaystyle H}{|}}{\underset{\underset{\displaystyle H}{|}}{C}}-\overset{\overset{\displaystyle H}{|}}{\underset{\underset{\displaystyle H}{|}}{C}}-\right)_{12}-\overset{\overset{\displaystyle H}{|}}{\underset{\underset{\underset{\underset{\displaystyle Cl}{|}}{\displaystyle SO_2}}{|}}{C}}-\right)_n$$

$$\text{Hypalon}$$

**Fig. 16.9 (f) Hypalon**

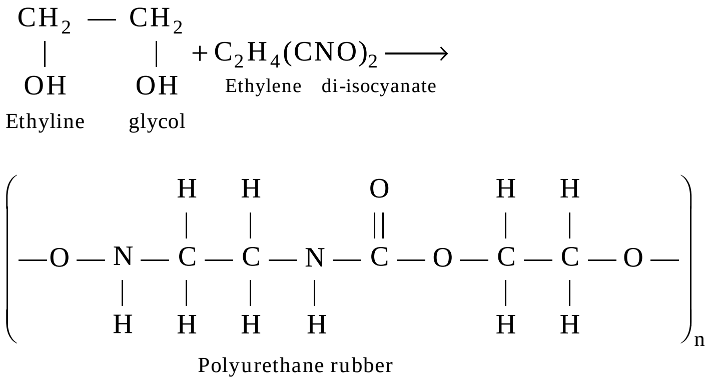

**Fig. 16.9 (g) Polyurethane Rubber**

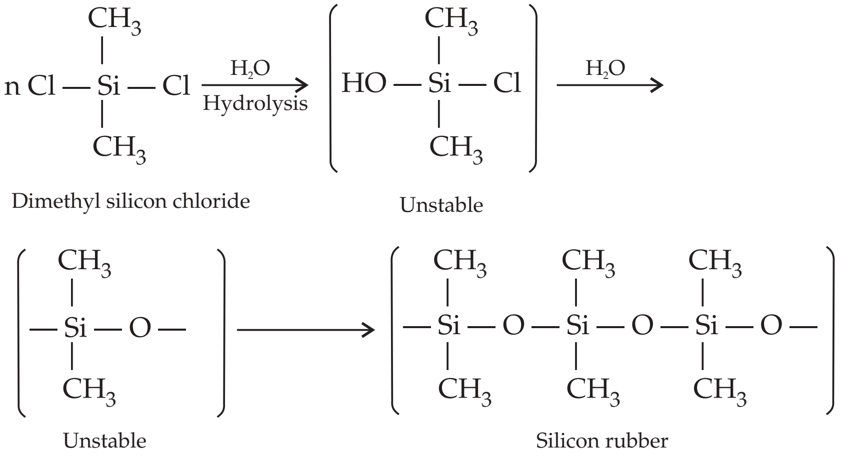

**Fig. 16.9 (h) Silicon Rubber**

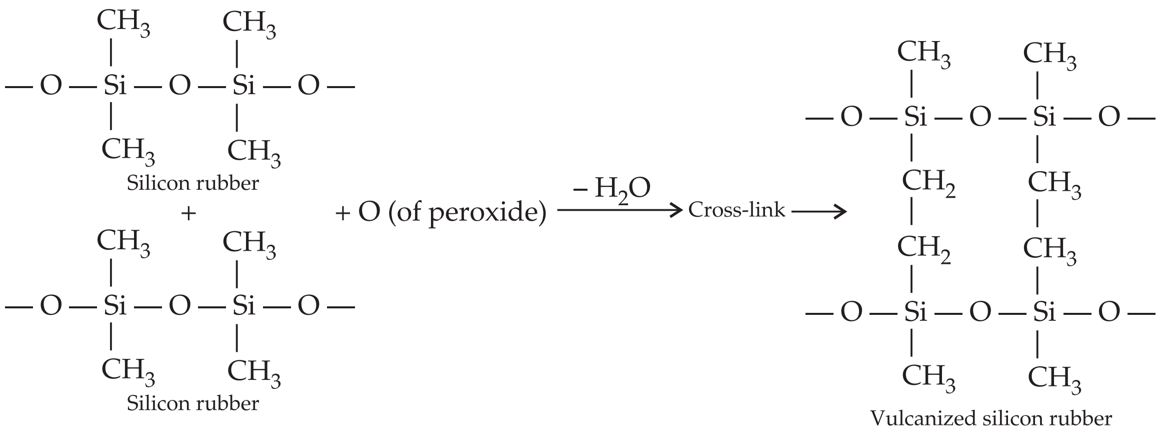

**Fig. 16.9 (i) Vulcanized Silicon Rubber**

## Compounding of Rubber

The crude rubber is elastic. In cold weather it is elastic whereas soft and sticky in hot weather. These defects are removed by vulcanization. Softeners and plasticisers such as vegetable oils, wax and rosin oil are added to natural or synthetic rubber to enhance tenacity and adhesion; vulcanizing agents such as sulphur (0.15–32%) which combines chemically at the double bonds of different rubber springs (Fig. 16.10) and thus enhance stiffness. A vulcanized rubber tyre may contain 3–5% of sulphur whereas a battery case rubber contains as much as 30 per cent. The vulcanization process is however, slow and the product is porous, lacks sufficient strength and deteriorates on prolonged exposure to atmosphere. To overcome these short comings some additives are added prior to vulcanization. These additives are classified as accelerators, reinforcing pigments, softners and antioxidants according to the functions they perform. Accelerators like benzthiozole shorten the time required for vulcanization; antioxidants like complex amines are added to check the tendency of natural rubber to perish due to oxidation; reinforcing fillers such as carbon black are added to give strength and rigidity to the tyres. Plasticizers such as stearic acid, resins and fatty oils are sometime incorporated in rubber composition. Antioxidants or age resistors decrease the rate of detercoration and prolong the life of the rubber. These are usually compounds of organic aromatic amines and are added to the extent of 0.3 to 2 per cent.

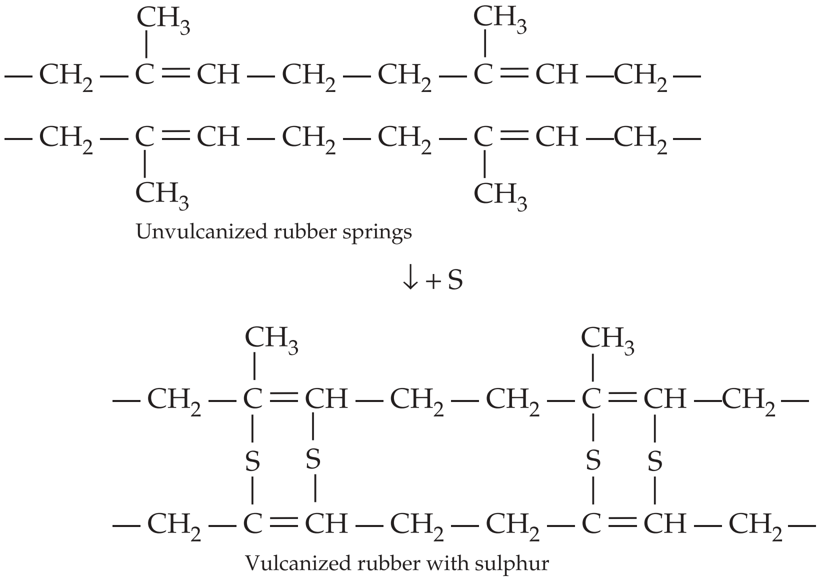

**Fig. 16.10 Vulcanization of Natural Rubber with Sulphur**

## Uses

Rubber is the most suitable material for conveyer belts, linings for tanks. Tyres, gaskets, mountings, hoses, insulating coatings and toys, phenolaldehyde resin with waste rubber is used to make flooring tiles. Like cyclised rubber chlorinated rubber, is a modified form of natural rubber, most widely used in the production of protective coatings and adhesives. Rubber hydrochloride, on processing can produce thin films of wrapping and packages. Rubber is also being used increasingly in the manufacture of foam rubber, which is used in upholstery and furniture.

## 16.5 PLASTICS

Plastics are made from resin with or without fillers, plasticisers and pigments. These are organic materials of high molecular weight which can be moulded to any desired form when subjected to heat and pressure in the presence of a catalyst. Schonbein invented a plastic named cellulose in 1846. Later John Wesley Hyatt in 1890 developed cellulose, and Adolph spitter invented casein plastics. Bakelite was developed in 1909 by Dr. Bakeland. Since then a variety of plastics have been developed. These are natural (shellac and resin) or synthetic in origin.

Plastics are replacing glass, ceramics and other building materials due to the low temperature range in which they can be brought to the plastic state and the consequent ease of forming and fabrication and also for their low cost and easy availability. Plastics are classified as thermoplastic, and thermosetting.

The thermoplastic variety softens on heating and hardens on cooling, *i.e.*, their hardness is a temporary property subjected to change with rise or fall of temperature and can be brought again to plastic stage on heating. These are formed by addition polymerisation and have long chain molecular structure. They can be remoulded, for use, as many times as required. Examples are material resins— rosin, kopal, amber, shellac; cellulose derivatives— cellulose acetate, cellulose nitrate, nitrocellulose or celluloid, cellulose acetate-butyrate; polythenic or vinyl resin—polyethylene, polyvinyl chloride, polyvinyl acetate, vinyl chloride = vinyl acetate, poly vinylidene chloride, polystyrene, polymethyl methyacrylate or lucite or plexiglass and polytetrafluoroethylene; polyamides Nylon 6:6, Nylon 6 and Nylon 11. Some of the uses of the plastics are given in Table 16.1.

**Table 16.1 Principal Uses of Plastics**

| *S.No.* | *Uses* | *Name of plastic* |
|---|---|---|
| 1. | As a substitute of glass for doors and windows | Acrylic (Trade name Perspex), better than glass. |
| 2. | Insulation of electric cables, light fittings, hand rails | Cellulose acetate |
| 3. | Set squares, slide rules, fountain pens | Cellulose nitrate |
| 4. | Electric insulation, kitchenware, toys, sheets for packing | Polyethylene |
| 5. | Electric equipments, refrigerator parts, food containers, toys, as a rigid form for packing | Polystyrene |
| 6. | Drainage pipes, floor finishes,<br>emulsion paints | Polyvinyl chloride (PVC)<br>Polyvinyl acetate (PVA) |

Thermosetting plastic cannot be reused. They require great pressure and momentary heat during moulding and finally get hardened on cooling. The chemical reaction in this porcess cannot be reversed. Once solidified they cannot be softened. The thermosetting plastics acquire three-dimensional cross-linked structure with predominantly strong covalent bonds during polymerisation retaining strength even on heating; under prolonged heating they fail by charring. Compared to thermoplastics, they are hard, strong and more brittle. The important thermosetting resins are phenolic resins or phenoplasts (bakelite), amino resins, polyester resins, epoxy resins and silicon resins. The principal uses are in electrical equipments, plugs, sockets, switches, ash trays, knobs, handles, etc.

### Properties

1. Can be moulded to any desired shape or size and have high tensile and compressive strengths.
2. Easy to work upon.
3. Light in weight and a few varieties are glossy like glass.
4. Not attacked by insects and fungi.
5. Available in desired colour and texture.
6. Require a little maintenance.
7. Good electrical insulators and have low thermal conductivity.
8. Shock absorbing material.
9. Can be sawn, drilled and punched and welded easily.
10. High strength to weight ratio.
11. High resistance to weathering conditions.
12. Corrosion resistance.
13. Decorative surface effect—painting or polishing of the surface is not required.
14. High refractive index.
15. Some varieties are as hard as steel.
16. Withstands moisture, oil and grease well.
17. Inflammable.
18. High coefficient of thermal expansion (about ten times of steel).
19. Deterioration under prolonged exposure to sun's ultra violet rays.
20. Low manufacturing cost, hence cheap.

## 16.6 CONSTITUENTS OF PLASTICS

The constituents of plastics are resin, plasticizer, filler, pigment and dye, lubricant and catalyst.

***Resin*** acts as binder for holding different constituents together. Thermosetting resins are usually supplied as linear polymer of a comparatively low molecular weight being fusible and mouldable.

***Plasticiser*** modifies plastic to impart desirable combination of strength, flexibility and toughness. Plasticizers, which are mostly liquids, are usually organic compounds or resins possessing very low vapour pressure. Their addition is particularly necessary when the softening temperature of a resin is too high. Plasticizer is supposed to neutralize a part of the intermolecular force of attraction between macromolecules of resins. Consequently the polymeric macromolecules of resin move with greater freedom, thereby increasing the plasticity and flexibility of the compounded material. However, tensile strength and chemical resistance is reduced. Some of the examples of plasticisers are vegetable oils (non-drying type), camphor, esters of stearic and oleic acids, tricresyl phosphate, tributyl phosphate, tetrabutyl phosphate and triphenyl phosphate.

***Filler*** is added up to 50 per cent of the moulding mixture to increase the hardness, tensile strength, bond, opacity, finish and workability besides reducing the cost, shrinkage on setting, and brittleness of the final product. Some of the fillers are wood flour, asbestos fibres, mica, diatomaceous earth, saw dust, ground cork, paper pulp, corn husk, carbon black, cotton fibre, metallic oxides, metal powder (Al, Cu, Pb). Carborundum, quartz are found to be most suitable for extra hardness. Mica is used to improve electrical properties. Barium salts when added to plastics make them impervious to X-rays. Asbestos is used to make plastics heat resistant. Carbon and graphite impart chemical resistance and also serve as an internal lubricants.

***Pigment*** is added to achieve desired colour of the plastic and should be resistant to the action of sunlight.

***Lubricant*** is used to make the moulding of plastic easier to prevent sticking of materials to the mould for a flawless finish. The examples are stearates, oleates and soaps.

***Catalyst*** is added only in the case of thermosetting plastics to accelerate the polymerisation of fusible resin during moulding operation into cross-linked infusible form.

***Blowing Agent*** Sodium bicarbonate and ammonium carbonate are sometimes added to plastics to produce porous articles.

## 16.7 FABRICATION OF COMMERCIAL ARTICLES FROM PLASTICS

The method used for fabrication of commercial articles from plastics depends primarily on the type, resin used, shape, size and thickness of the articles. Following are the commonly used fabrication methods.

### Moulding

***Compression Moulding*** can be employed both for the thermoplastics and thermosetting plastics. The fluidised material is filled in the mould cavity by hydraulic pressure (Fig. 16.11). There is an arrangement to heat the plastic if desired. Temperature and pressure is applied till the chemical reaction is complete. Finally curing is done by heating (thermosetting plastics) or by cooling (thermoplastics). After curing is complete, mould is opened and moulded material is taken out.

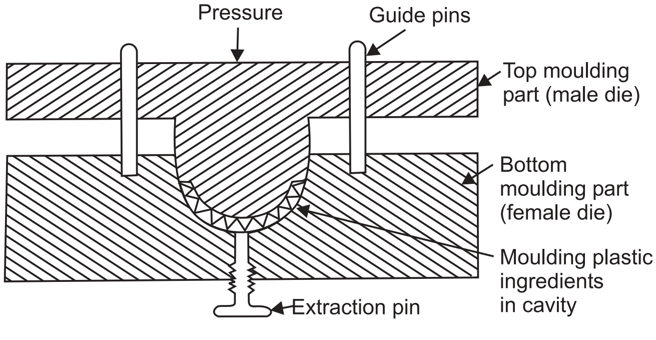

**Fig. 16.11 Compression Moulding of Plastic**

***Injection Moulding*** is best suited for the moulding of thermoplastic materials. The plastic powder is fed into a cylinder from a hopper where it is heated. When the mould opens, a screw (Fig.16.12) or a plunger allows the material to go inside the cylinder from the hopper. The resin melts in the heating zone from where it is sent to the mould cavity through nozzle. The mould is kept cold to allow the hot plastic to cure and acquire the shape. Half of the mould is opened to cause enjection of the finished article.

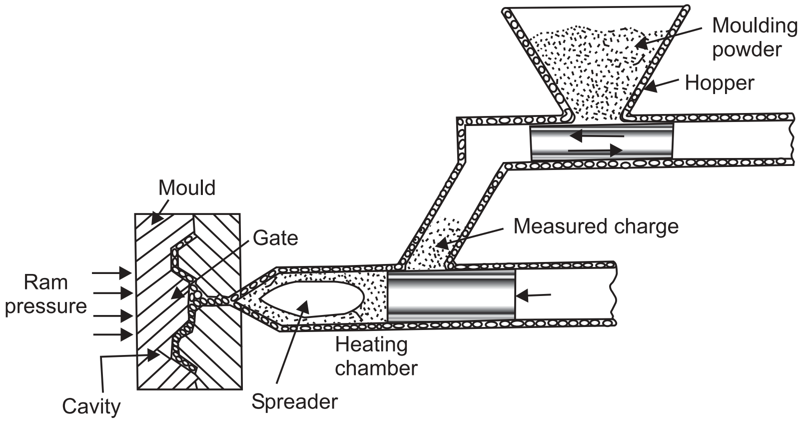

Fig. 16.12 Injection Moulding

***Transfer Moulding*** uses the principle of injection moulding for thermosetting materials. Intricate machine parts are moulded by this method. The thermosetting material powder is heated to become just plastic and injected through an orifice, as shown in Fig. 16.13, into the mould by the plunger working at high pressure. The temperature of the material rises because of the friction at the orifice and the powder becomes almost liquid which flows into the mould and in turn is heated to curing temperature.

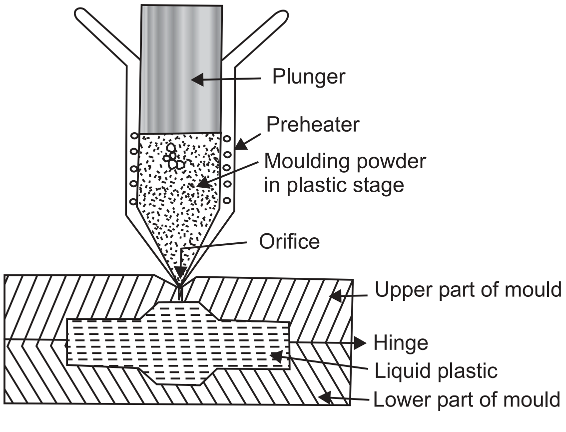

Fig. 16.13 Transfer Moulding of Plastic

***Extrusion Moulding*** is used for continuous moulding of thermoplastic materials into articles of uniform cross-section such as tubes, rods, strips, electric cables, etc. The thermoplastic material is heated to plastic state and is pushed to a die by a screw conveyer (Fig. 16.14 and Fig. 16.15). As the extruder rotates it has a mixing, smearing, and frictional heating action which changes the dry granular charge into a soft plastic mass before it reaches the end of the screw. Here the plastic mass by air jets.

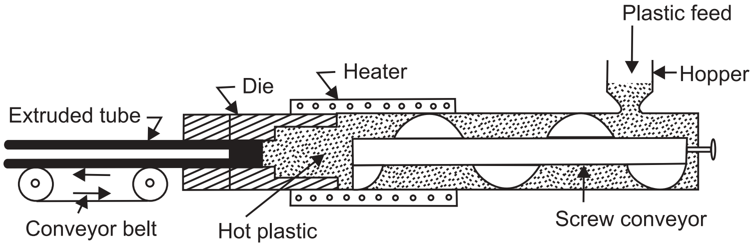

**Fig. 16.14 Moulding of Tube by Horizontal Extrusion Moulding**

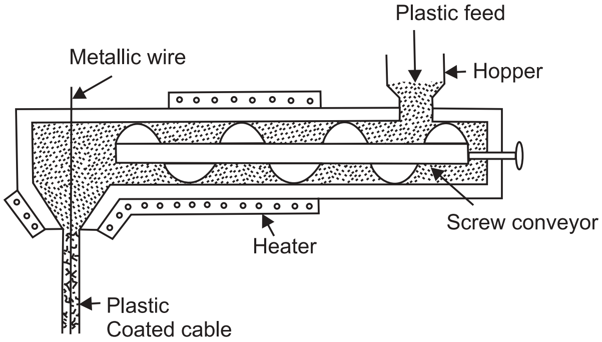

**Fig. 16.15 Moulding of Cable by Vertical Extrusion Moulding**

***Blow Moulding*** Air pressure or vacuum are employed in this method of moulding to force the softened plastic powder into the mould.

## Casting

The plastics are moulded without application of pressure. The resin is melted and poured into mould. The casting of plastics is similar to that of cast iron. Since the cast plastic is not so smooth just after casting, they are polished. This method is most suited to the plastics formed form cellulose acetate and cellulose nitrate.

## Lamination

Thin sheets of cloth or paper asbestos are impregnated with thermosetting resin. These lamins are then pressed by a hydraulic press. Under temperature and pressure the lamins are bonded together to form one sheet. The laminated plastics exhibit improved mechanical and electrical properties. The thickness of laminated plastics ranges between 0.13 mm–15 mm. Vinyl resin is most suitable for lamination.

## 16.8 APPLICATIONS OF PLASTICS

Plastics have innumerable applications either to substitute or protect other building materials, or to improve the comfort conditions. However, because of relatively low stiffness they are not used as primary load bearing materials. Some of the uses of plastics are as follows.

***Wall Facing Tiles*** Polystyrene tiles have excellent water proofing properties and are used for bathrooms, kitchens, lavatories, swimming pools and facing tiles.

***Flooring Tiles*** Polyvinyl chloride synthetic resins used for floor tiles are nonabsorbent, resistant to abrasion, wear and tear.

***Flooring Sheets*** Mastics, prepared from synthetic resins such as polyvinyl acetate with suitable plasticisers form decorative linoleum floor coverings.

***Warer-proofing Membranes*** Polythene and polyvinyl resins with suitable fillers and plasticisers, oils and antipyrene compounds are used to make films which have high elastic strength, rupture value and acid resisting properties. These films are used for damp proofing courses, covering of concrete for curing, temporary protection from rain and wind.

***Pipes and Sanitary Appliances*** Polythene, polypropylene and polyvinyl chloride are used for making pipes and sanitary wares and fittings.

## 16.9 PROPERTIES OF PLASTICS

The great diversity of plastic materials, modified by fillers, plasticisers, laminating sheets, etc. leads to a wide range of mechanical and physical properties.

***Stress-Strain Relationships*** Typical tensile stress-strain curves for various types of plastics are shown in Fig. 16.16. Curve A of Fig.16.16 is typical of hard, strong, but unyielding plastics like moulded thermosetting materials and paper laminates. Curve B relates to materials like cellulose acetate, cellulose acetate butyrate, and some fabric materials. Curve C is typical of a large number of plastics. Curve D relates to some highly extensible plastics.

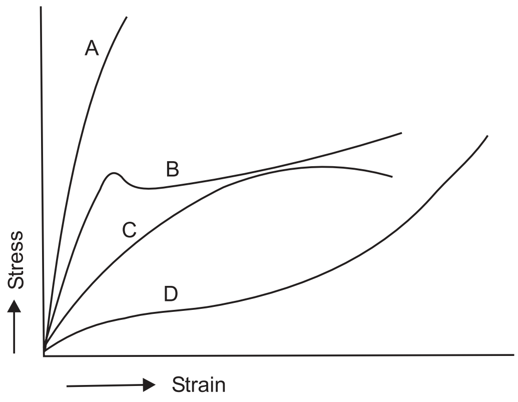

**Fig. 16.16 Tensile Stress-Strain Curves for Various Types of Plastics**

Rubbers behave similarly. The stress-strain curves for cellulose acetate sheet at various temperatures is shown in Fig. 16.17.

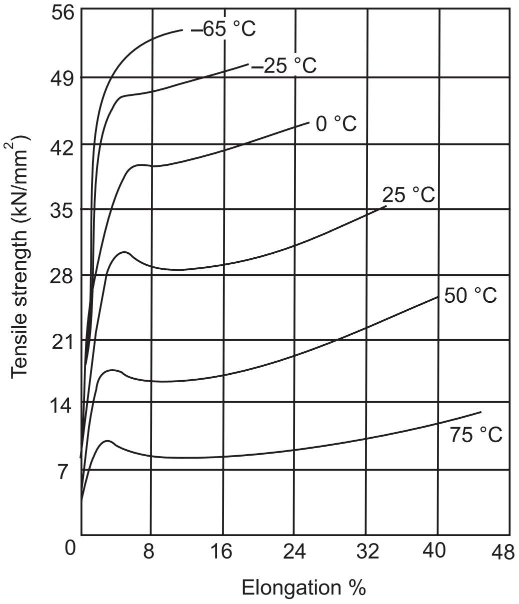

**Fig. 16.17 Stress-Strain Curve for Cellulose Acetate Sheet at Various Temperatures**

### *Creep, Relaxation, Memory*

When a load is applied to a plastic specimen it quickly deforms and the load is sustained, the specimen continues to deform at a decreasing rate. If, after creep has occurred for a period of time, the load is released, a quick partial recovery takes place immediately, followed by slow recovery which may or may not completely restore the specimen to its original size and shape (Fig. 16.18 (a)).

If the deformation caused by a load is held constant, the load decreases. The phenomena is known as *relaxation* (Fig. 16.18(b)). *Memory* means that the behaviour of a plastic specimen under stress may be influenced by its previous stress history. As shown in Fig. 16.18(c), the specimen is subjected to a succession of loads of varying intensities, directions, and durations. There may not be time for normal creep recovery before a reversal of load occurs. The final deformation may, therefore, experience a reversal.

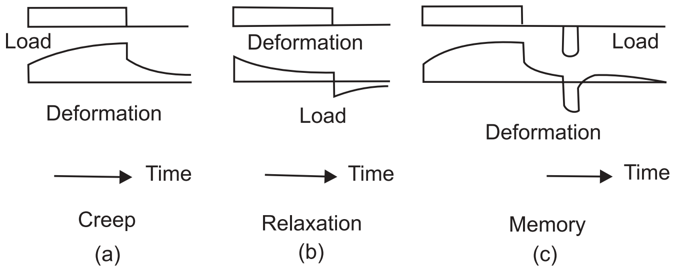

**Fig. 16.18 Diagrammatic Representation of Creep, Relaxation, and Memory**

## 16.10 EFFECT OF TEMPERATURE ON MECHANICAL PROPERTIES

Mechanical properties of all plastics are sensitive to changes in temperatures. Figure 16.19(a) and Fig. 16.19(b) show the respective effects of temperatures on thermoplastics and thermosetting plastics. The effect on ultimate elongation of thermoplastics is shown in Fig. 16.20.

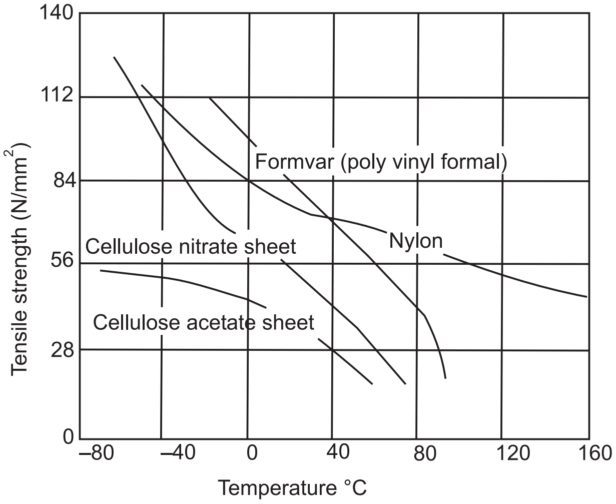

(a) Thermoplastics

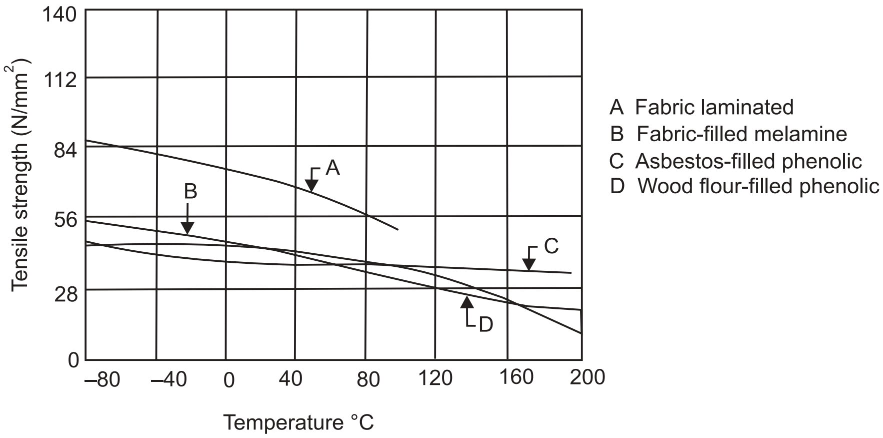

(b) Thermosetting Plastics

**Fig. 16.19 Effect of Temperature on Tensile Strength of Plastics**

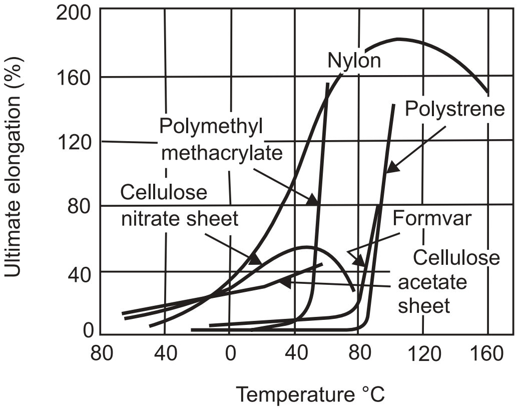

**Fig. 16.20 Effect of Ultimate Elongation on Thermoplastics**

## EXERCISES

1. (a) What do you understand by polymerisation? Explain the mechanism of polymerisation.
   (b) Differentiate between addition and condensation polymerisations.
2. (a) Explain the following terms:
   Co-polymerisation, condensation, smoked rubber.
   (b) Why are the plasticisers added to polymers.
3. (a) What is a rubber and how is it classified?
   (b) State the reasons for compounding rubber.
   (c) What is artificial rubber?
4. Differentiate between following:
   (a) Thermoplastic and thermosetting plastic.
   (b) Addition and condensation polymerisations.
   (c) Rubber and Plastic.
   (d) Injection and compression mouldings of plastics.
5. (a) What is vulcanization of rubber and how is it affected?
   (b) Give the important characteristics of plastics.
   (c) Describe the moulding of plastics.
6. (a) Give the typical uses of plastics obtained from different moulding processes.
   (b) What are the various ingredients of the plastics? Give their specific uses.
7. (a) Describe the characteristics of *PVC*.
   (b) Write a note on Bakelite.
   (c) Describe briefly the fabrication of plastics.
8. (a) How are plastics classified? State the role of plastic as a building material.
   (b) Differentiate between crepe rubber and smoked rubber.
   (c) Explain what is meant by depolymerisation. Is it harmful?
9. (a) State the properties of plastics.
   (b) What are the advantages of plastics over the other suitable building materials?
   (c) Describe briefly use of plastics as building material.
10. Discuss:
    (a) Stress-strain curve for plastics.
    (b) Creep and relaxation in plastics.
    (c) Effect of temperature on ultimate elongation of plastics.

## OBJECTIVE TYPE QUESTIONS

1. Polyvinyl chloride (PVC) is a
   (a) thermosetting material (b) thermoplastic material
   (c) elastoplastic material (d) rigid-plastic material
2. Plastics are examples of
   (a) ceramic materials (b) polymeric materials
   (c) anhydrides (d) elastomers
3. Bakelite plastics are obtained by
   (a) addition polymerisation (b) condensation polymerisation
   (c) co-polymerisation (d) de-polymerisation

4. Pick out the incorrect statement with regards to thermo-plastics.
   (a) Catalyst are not added
   (b) Formed by addition polymerisation
   (c) Once solidify cannot be softened
   (d) Example is plexiglass
5. Which of the following is not an example of thermoplastic?
   (a) Polyethylene
   (b) Nylon
   (c) PVC
   (d) Bakalite
6. Camphor in plastic is used as
   (a) resin
   (b) plasticiser
   (c) filler
   (d) catalyst
7. Which of the following is useed for making electrical switches?
   (a) PVC
   (b) Polypropylene
   (c) Bakelite
   (d) Polyvinyl accetate
8. Neoprene is suitable for use in
   (a) bearings of bridges
   (b) hard duty rubber coatings of floors
   (c) joinery works
   (d) floors of dance halls
9. The vulcanizing agent used in rubber is
   (a) wax
   (b) rosin oil
   (c) zinc
   (d) sulphur
10. To impart strength and rigidity to the rubber tyres the reinforcing filler used is
   (a) carbon black
   (b) sulphur
   (c) rosin oil
   (d) antioxidant
11. The material which provides maximum elasticity to plastics is
   (a) filler
   (b) accelerator
   (b) elastomer
   (d) solvent
12. The materials added to plastics to improve their mechanical properties and make them economical are known as
   (a) accelerators
   (b) plasticizers
   (c) fillers
   (d) stabilizers

## Answer Table

1. (b) 2. (b) 3. (b) 4. (c) 5. (d) 6. (b) 7. (c) 8. (a) 9. (d) 10. (c)
11. (a) 12. (c)

# 17

# Paints, Enamels and Varnishes

## 17.1 INTRODUCTION

Paint is a liquid surface coating. On drying it forms a thin film (60–150 $\mu$) on the painted surface. Paints are classified as oil paints, water paints, cement paints, bituminous paints and special paints such as fire proof paints, luminous paints, chlorinated rubber paints (for protecting objects against acid fumes), etc.

The functions of the paints are: to protect the coated surface against possible stresses—mechanical or chemical; deterioration—physical or environmental; decorate the structure by giving smooth and colourful finish; check penetration of water through R.C.C; check the formation of bacteria and fungus, which are unhygienic and give ugly look to the walls; check the corrosion of the metal structures; check the decay of wood work and to varnish the surface to display it to better advantage.

## 17.2 COMPOSITION OF OIL PAINT

***Base*** The base, usually a metallic oxide, is the principal constituent of the paint. It makes the paint film opaque and possesses binding properties which reduce the shrinkage cracks in the film on drying. Some of the examples of base are white lead, red lead, zinc white, aluminium powder, iron oxide, etc. Their detailed description is given in Table 17.1. Lead based paints are in general affected by atmosphere and are not recommended for final coats. Zinc white is weather resistant. For inferior works Lithophone (barium sulphate chemically combined with

**Table 17.1 Description of Bases**

| *S.No.* | *Name* | *Description* |
|---|---|---|
| 1. | White lead | This is a carbonate of lead and forms the base of lead paints. It is dense, permanent and water-proof. It is not suitable for delicate works as lead becomes discoloured when exposed to sulphur vapours. It is most suitable for wood surfaces; Since it does not afford protection against rusting, it is not suitable for iron surfaces. |
| 2. | Red lead | This is an oxide of lead and forms the base of lead paints. It is most suitable for painting iron surfaces and for providing a priming coat to wood surfaces. It solidifies in a short time with linseed oil and hence, it is used as a drier also. |
| 3. | Zinc white | This is an oxide of zinc and forms the base of all zinc paints. It is smooth, transparent and non-poisonous. It is not discoloured when exposed to sulphur vapours. It is less durable and is difficult to work. |
| 4. | Oxide of iron | This is an oxide of iron and forms the base of all iron paints. The tint of paint varies from yellowish brown to black. It mixes easily with the vehicle. It is effective in preventing rusting of iron surfaces and is cheap and durable. It is generally used for priming coat of iron surfaces. |
| 5. | Titanium white | This material possesses intense opacity. It is non-poisonous and provides a thin transparent film. It is used for receiving the coat of an enamel. |
| 6. | Antimony white | This is almost similar to titanium white. |
| 7. | Aluminium powder | This forms the bulk of aluminium paints. It keeps moisture content of wood surfaces practically the same and also prevents cracking and warping of wood. It is generally used for a priming coat to new wood work. |
| 8. | Lithophone | This is a mixture of zinc sulphide and barytes. It is similar in appearance to oxide of zinc. It is cheap and can easily be applied on the surface. However, when exposed to daylight, it changes colour, hence used for interior works only. |

zinc sulphide) is used for inside work. Aluminium powder is used as base for all aluminium paints.

***Vehicle*** Also known as *binder*, vehicle is an oil to which the base is mixed. It holds the constituents of paint in suspension and helps spread it over the surface to be painted, imparts durability, toughness and water proofness to the paint film and resistance to weathering and gloss to the painted surface and forms the body of the paint. The examples are natural drying oils such as linseed oil, nut oil, poppy oil and tung oil (Table 17.2); animal, paint, artificial and synthetic glues in glue paints and air slaking lime and polymer in lime water colours and polymer paints respectively.

The natural drying oils (glycerides of the unsaturated fatty acids) harden in this layers to form strong and elastic surface coats. These are available in oxidized and polymerized varieties. The former being obtained by blowing air through linseed oil heated to about 160°C and by introducing a manganese-lead-cobalt drier the latter is obtained by polymerising linseed oil by heating it to about 275°C and introducing a manganese-lead-cobalt siccative. Linseed oil is the most widely used vehicle. It contains acid which reacts readily with oxygen and hardens by forming a thin film known as *linoxyn*. A priming coat of pure linseed oil induces corrosion which is greatly retarded by the presence of pigments. For this reason priming coat should contain little oil. Raw linseed oil has slow drying rate as such pale boiled linseed oil having better drying properties is used. The best results are obtained by using double boiled linseed oil.

**Table 17.2 Description of Vehicles**

| *S.No.* | *Name* | *Description* |
|---|---|---|
| 1. | Linseed oil | This is most common vehicle extracted from flax seeds. Linseed oil prepared from fine full-grown ripe seeds is clear, transparent, pale, sweet to the taste and practically odourless. It is used in the following grades: |
| | (a) Raw linseed oil | Raw linseed oil is thin and pale. It requires more time for drying and is used for interior works of delicate nature. |
| | (b) Boiled linseed oil | This oil is thicker and dark coloured than that of the raw oil. It dries quickly and is prepared by adding some quantity of drier such as litharge or red lead to the raw oil. It is used for exterior surfaces only. |
| | (c) Pale boiled linseed oil | This is similar to boiled linseed oil except that it does not posses a dark colour. It is more suitable for painting plastered surfaces. |
| | (d) Double boiled linseed Oil | This oil dries very quickly and is suitable for external works. It, however, requires a thinning agent like turpentine. |
| | (e) Stand oil | Formerly this oil was prepared by exposing raw linseed oil to sun till it thickened like honey. However, at present, heat treatment is used for this purpose. This oil dries slowly and provides a durable, clear and shining finish. |
| 2. | Tung oil | This oil is far superior to linseed oil and is used for preparing paints of superior quality. |
| 3. | Poppy oil | This oil is prepared from poppy seeds. It dries slowly and its colours are long lasting. It is used for making paints of delicate colours. |
| 4. | Nut oil | This oil is extracted from ordinary walnuts. It is nearly colourless and dries rapidly. It does not provide a durable finish and is used for ordinary work. |

***Pigments*** are used to hide the surface imperfections and to impart the desired colour. They protect the paint film by reflecting the destructive ultra violet light, which acts as a catalytic agent for the destructive oxidation of the film. They also improve the impermeability of the paint film and enhance its resistance to weathering, affect the flow characteristics making it possible to paint vertical and uneven surfaces smoothly. Pigments are finely ground mineral, organic substances or metal powders; their size in organic coatings ranges from 0.1 to 5.0 microns in diameter. Their general properties are covering power, colouring capacity, fineness, fire resistance, chemical stability and weather resistance. The fine particles of the pigments have a reinforcing effect on the paint film.

The common pigments are classified as natural and artificial. The former used for preparing limestone and glue paints, putties and coloured building mortars, include ground natural white chalk, mastics, grey graphite, dry yellow ochre (a clay containing over15 per cent of iron oxide), etc. Artificial mineral pigments, obtained by chemical processing of raw mineral materials, include titanium dioxide, zinc white, lead white ($2\ PbCO_3.Pb\ (OH)_2$), lithophone ($BaSO_4 + ZnS$), chrome oxide, red lead, gas black soot, etc. metal powders such as aluminium powder, metallic powders, gold dust, etc. synthetic substances of organic origin, possessing high dyeing capacity. Some of the examples of pigments used to produce the desired colours are lamp black and ivory black (Black), Prussian blue, indigo (Blue), chrome yellow, yellow orchre (yellow), burnt umber, burnt siena (Brown), vermilion, red lead (Red) and copper sulphate (Green).

***Solvents*** are the oils used to thin the paints, increase the spread, and are also known as *thinners*. They make the paint of workable consistency and evaporate during drying of the film. The common thinning agents used are petroleum, spirit, naptha and turpentine oil—a mixture of the various terpens, obtained from the steam distillation of the resinous exudations of the pine tree, leaving resin as a by-product. Turpentine is used extensively because of high solvent power, excellent flattening properties and ideal rate of evaporation.

**Driers** also known as plasticizers, are chemicals added to paint for specific purposes, *e.g.*, as catalyst (accelerate the drying of the vehicle) for the oxidation, Polymerisation and condensation of the vehicle in paint. The quantity of drier is limited to 8 per cent, excess of it affects the elasticity of paint leading to flaking failure. Some of the examples of driers are letharge (oxidized lead, PbO), lead acetate, red lead ($Pb_3O_4$), manganese dioxide and cobalt, zinc and lead chromate. Red lead is the best for primary coat over steel and metal work; it produces an extremely hard and tough film, almost impervious to air and moisture, adheres firmly to the metal and is extremely effective in protecting steel from corrosion. The cost of zinc and lead chromates is high.

**Adultrants** bring down the overall cost, reduce the weight and increase the durability. Adultrants also help to reduce cracking of dry paint and sometimes help to keep the pigment in suspension. Barium sulphate, calcium carbonate, magnesium silicate and silica are but a few examples. The best adultrant is barium sulphate. Silica is used only in the undercoats so as to take the advantage of its roughness in development of bond with the next coat.

## 17.3 CHARACTERISTICS OF AN IDEAL PAINT

The requirements are uniform spread as a thin film, high coverage, good workability and durability, sufficient elasticity to remain unaffected by expansion or contraction of the surface to be painted or by weathering action of atmosphere. The paints should also be: impervious to air and water, cheap and economical to form a hard surface.

## 17.4 PREPARATION OF PAINT

The base is ground in a vehicle to the consistency of paste in a stone pestle known as *muller*. Linseed oil, is intermittently added to the paste in small quantities and the mixture is stirred with a wooden puddle. In case of coloured paints, the pigment is mixed with linseed oil separately and the paste is formed as explained above. Driers are also ground separately in linseed oil. The three pastes so prepared are mixed and a little linseed oil is added further to soften the paste. The mixture is continuously stirred till a consistency of cream is obtained. The mixture is thereafter strained through fine canvas or a sieve. The paint is now ready for use. The paint so prepared can be used by adding oil or a thinner to make it of workable consistency before application.

For commercial manufacturing of paints a four-storey building is used to have gravitational flow of materials. Pigments, oil, thinner, plasticizer, drier, etc. are stored on the fourth floor and are fed by means of chutes in proper proportions, to the grinding mill placed on the third floor and are ground. The thoroughly ground materials are then sent to storage tanks on the second floor. The charge in the tanks is kept in motion by agitation mechanism so that settling of materials does not take place. An additional quantity of vehicle is added here to get the desired composition. The batch is then tested for quality control. The paint material is then strained and sent to first floor, where it is packed in containers. Finally the packed material in containers is sent to the ground floor. A flow diagram of paint manufacture is shown in Fig. 17.1.

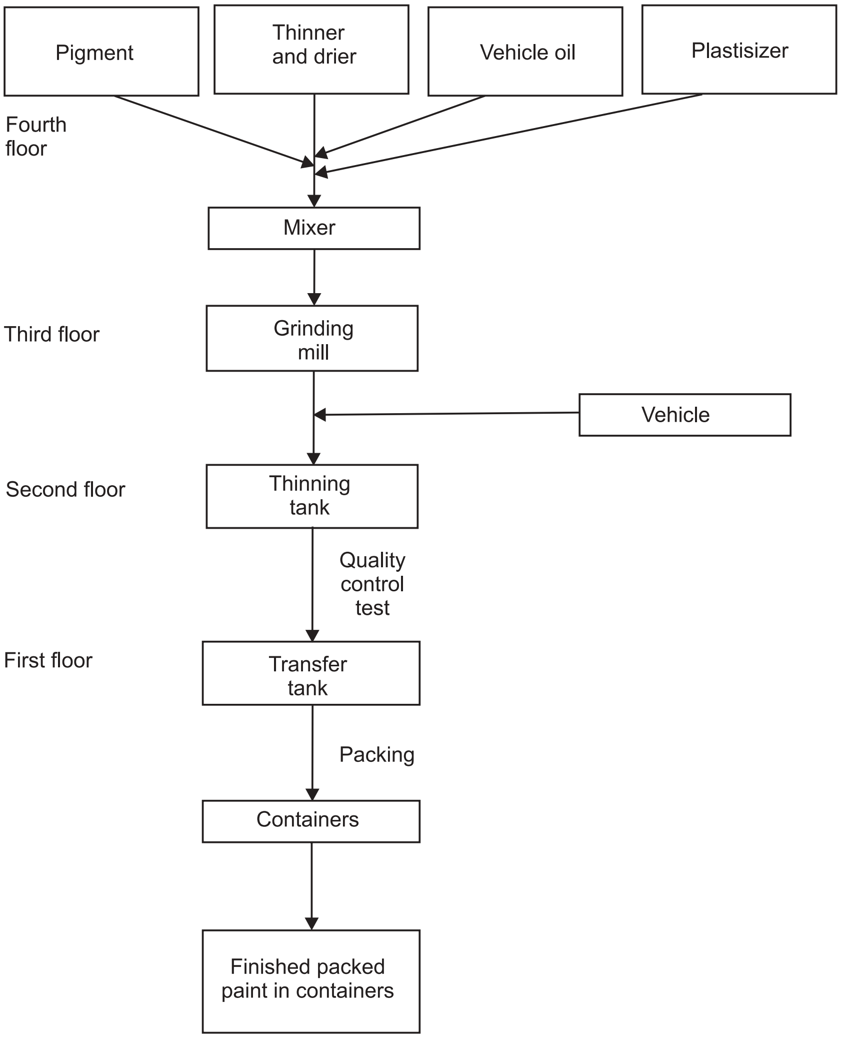

**Fig. 17.1 Flow Diagram of Paint Manufacture**

The factors affecting the quality of paint so prepared are quality of ingredients, grinding, intimate mixing and proportioning, straining, packing, etc. Ready mixed paints are also available in the market with different trade names, *e.g.*, Asian, Ducco, Shalimar, Berger Nerolac, etc.

## 17.5 COVERING POWER OF PAINTS

The covering power is the capacity, of a given quantity of the paint of the suitable consistency for application, to cover the extent of area.

The covering power, also known as *spreading capacity* of paints and varnish depends upon the type of paint and its constituents, type of surface to be painted, and number of coats to be applied. The area covered by different paints is given in Table 17.3.

**Table 17.3 Covering Capacities of Paints**

| *S.No.* | *Type of paint or varnish* | *Type of surface* | *Area covered in sq.m/litre* |
|---|---|---|---|
| 1. | Lead priming coat | Wood work | 10 |
| | | Metal work | 11 |
| 2. | Under coat | Flat surface | 11 |
| 3. | Gloss paint | Flat surface | 11 |
| 4. | Enamel | Flat surface | 11 |
| 5. | Varnish (first coat) | Flat surface | 12 |
| 6. | Varnish (second coat) | Flat surface | 15 |

## 17.6 PIGMENT VOLUME CONCENTRATION (P.V.C.)

It is the concentration by volume of the pigments expressed as a percentage of the total volume of non-volatile constituents of the paint.

Volume of pigment in paint

$$\text{P.V.C.} = \frac{\text{Volume of pigment in paint}}{\text{Total volume of nonvolatile constituents of the paint}}$$

$$= \frac{\text{Volume of pigment in paint}}{\text{Volume of (pigment + nonvolatile vehicle constituents) in paint}}$$

The PVC value is essential in determining the amount of a particular pigment that can be added to the polymer of the coating. The pigment has to have sufficient wetting to create a protective coating. Wetting means there must be sufficient polymer or binder, to completely wet or surround all the pigment particles. Also, there must be enough polymer to completely fill the voids between the pigment particles. The point at which there is just sufficient polymer to wet the pigment particles is known as critical pigment volume concentration (CPVC). Below the CPVC there is sufficient polymer for pigment wetting and above the CPVC it is not. At CPVC many physical and optical properties of paint change abruptly.

***Importance*** The pigment volume concentration largely controls such factors as gloss, washability, adhesion, undertone, hiding power, permeability and durability. With increase of PVC the gloss reduces until paint becomes flat; blistering also reduces. Above CPVC, permeability increases since above CPVC there are voids in the coating filled by air and the coating becomes discontinuous. If there is not enough polymer to wet the pigment then the pigment becomes a defect and the properties of paint decrease. With a decrease in the relative quantity of binder, the film formed looses cohesion and durability and the washability of paint film decreases. Some of the properties that can be evaluated above and below the CPVC are blistering, gloss, rusting, permeability, enamel hold out, scrub resistance, tensile strength, and contrast ratio. A range of PVC for different types of paints is given in Table 17.4.

Extenders, when added to a paint, amounts to increase in P.V.C. and thus decrease the gloss, washability, durability, and adhesion. So, if a pigment is costly and its covering power is high, a portion of the pigment may be economically replaced by extenders without sacrificing efficiency in covering power of pigment. Opacity of a white paint is created by the difference in the refractive indices of the pigment and vehicle. It is also influenced by the size of the dispersed pigment particles and by P.V.C.

**Table 17.4 Different finisher of paints and P.V.C.**

| *S.No.* | *Type of paint* | *P.V.C.* |
|---|---|---|
| 1. | Flat | 50–75 |
| 2. | Semi-gloss | 35–45 |
| 3. | Gloss | 25–35 |

## 17.7 PAINTING PLASTERED SURFACES

### Painting a New Surface

The operations are as follows:

***Surface Preparation*** Paint cannot take care of construction defects. Before applying the paint it is ensured that the surface is free from dust, dirt, loose matter, grease etc. and is rubbed with an emery paper, to provide a mechanical key between surface and paint for satisfactory adhesion.

***Sequence of Painting*** The primer (first coat) is applied with brush or spray on the prepared surface. It should be thinned with water or thinner in the recommended manner and proportion before application. After drying it is rubbed with emery paper.

Dents and cracks, if any, are filled with putty using a knife applicator. Putty should not be applied thick. If the required thickness is large, it should be applied in two coats. After the putty has dried, the whole surface is rubbed down well in order to smoothen the putty and provide a mechanical key to the finished coats.

Two or three finish coats are applied. Each coat is allowed to dry before the application of next coat.

### Painting Old Surfaces

The procedure depends on the state of the existing coating. If any of the defects discussed below is very much pronounced it is completely removed and the surface is painted as a new surface.

***Chalking*** Clean the surface, rub with an emery paper so that the chalk is removed. Apply one or two finish coats.

***Efflorescence, Blistering, Cracking and Flaking*** Scrap off the old paint from affected areas. Touch up with primer and apply one or two finish coats on effected areas. Rub the entire surface and apply the finish coats.

***Glossy surface*** Remove all gloss by rubbing with emery paper and then apply the finish coats.

***Fungus growth*** Remove the fungus. Apply fungicidal solution liberally and observe for further growth. If no further growth of fungus is observed apply the desired paint.

## 17.8 PAINTING WOOD SURFACES

Painting of wood work should be done with great care. Normally 3–4 coats are sufficient for wood work.

## New Wood Work

***Surface Preparation*** The wood should be well seasoned, dried, cleaned and the surface made smooth with an emery paper. Nails, if any, should be driven down the surface by at least 3 mm.

***Knotting*** Knots in the wood create lot of problems. These excrete resin which causes defects such as cracking, peeling and brown discolouration. Knotting is done so that resin cannot exude from the knots. Any of the following methods may be used suitably.

*Ordinary Knotting* This is also known as *size knotting*. The knot is treated with a coat of hot red lead ground with a strong glue size in water. Then a coat of red lead ground in boiled linseed oil is applied.

*Lime Knotting* The knot is covered with hot lime for 24 hours after which it is scrapped off. Thereafter, the process described in ordinary knotting is followed.

*Patent Knotting* Two coats of varnish or shelac are applied.

***Priming Coat*** The main function of priming coat or primer is to form the base for subsequent ones. After knotting priming coat is applied over the entire surface to fill all the pores. A second priming coat is applied after first has dried. In general the ingredients are same as those of the subsequent coats but with a difference in proportion. A typical composition of primer may be

| *Ingredient* | *Primer* | |
|---|---|---|
| | *Exterior work* | *Interior work* |
| Red lead | 0.03 kg | 0.12 kg |
| White lead | 4.5 kg | 3.6 kg |
| Boiled linseed oil | | 0.57 litres |
| Raw linseed oil | 2.27litres | 0.57 litres |
| Litharge | 0.06 kg | 0.45 kg |

***Stopping*** After the priming coat putty is applied to fill the pores of the surface. Then it is rubbed smooth. Colouring pigment is also added to it to match the shade of the finished coat. On drying, the selected paint is applied with brushes to bring smoothness and uniformity in colour. After painting the surface in one direction, the brush is worked in the perpendicular direction to eliminate brush marks. This is known as *crossing*. All the successive coats are applied after drying and slight rubbing of previous coats for proper bond.

## Old Wood Work

The old paint is removed with a sharp glass piece, sand paper, paint remover or with a blow lamp. Any smoky or greasy substance should be washed with lime and subsequently rubbed with pumice stone. The surface is then washed with soap and water and dried completely. Then two coats of paints are applied in a way similar to that described in painting new surfaces.

## Paints for Wood Work

A mixed pigment paint provides better protection; white lead combined with zinc oxide and a moderate amount of filler such as barytes or silica gives good results. Tinted paints have proved to be satisfactory for maintaining colour and durability. Generally enamel paints are used to give high gloss surface. When the wood is of superior quality and if the grains are to be highlighted the only choice is the varnish forming a transparent or translucent film.

## 17.9 PAINTING METAL SURFACES

### New Iron Work

The surface should be free from scales, rust and grease. Scales and rust are cleaned by hard wire brush. Grease is removed by using petroleum or by hot alkaline solution of $Na_2CO_3$ or NaOH, benzene, and lime water. A priming coat of red lead with barytes and raw linseed oil is then applied over the prepared surface. After drying of the priming coat, one or more undercoats with desired paint are applied. The second coat is given only after the first coat has dried. The finishing coat is applied carefully to produce a smooth fine surface.

### Old Iron Work

The surface is prepared by scraping properly all the scales and rust with emery paper. The greasy substances are removed with lime water. The old paint may be burned with a blow lamp or by suitable solvents. After this the surface is brushed with hot linseed oil and painted as for new iron work.

### Paints for Structural Steel Work

The major problem to overcome in painting iron and steel is corrosion due to electrolysis caused by the presence of air and moisture. Red lead is considered to be the best priming coat; it produces a tough elastic film, impervious to air and moisture. Pure linseed oil priming coat is detrimental in that it stimulates corrosion. The linseed oil film is rendered more impervious by the use of spar varnish. Graphite paint used for black colour, is very durable and is not affected by sulphur films, ammonia or chlorine gases. Silica-graphite paints are best; they do not crack and blister in course of time. Aluminium paint is also gaining popularity because of its shining and contrast properties and heat and chemical resistance. Bituminous paints may be very well adopted to paint inside of pipes, iron under waters, piles, ships and boats; they are unsatisfactory when exposed to sunlight. Lead or zinc paint should never be applied directly over the iron surface as it encourages galvanic action destroying the paint.

## 17.10 DEFECTS

A painted building with full colour effects gives complete satisfaction. But the appearance of defects, becomes a ready source of complaint. Unfortunately painting defects are by no means uncommon. They may arise from a variety of causes but the principal reasons behind them are incorrect choice of paint in relation to backing materials, application of paint to a damp surface or one to which moisture may have access and; poor workmanship.

### Effects of Background

The factors affecting durability are dampness, cleanliness, movements, chemical reactions, etc.

*Dampness* The traditional construction in brick, cement, etc. involve the use of wet procedures. If paint is applied on an insufficiently dry background the moisture is trapped and in the process of subsequent drying the adhesion of the paint breaks down. Emulsion paints are somewhat better in this respect.

*Cleanliness* Paint will not adhere to the surface if it is not cleaned of dirt or dust.

*Movements* The painting processes can be delayed for proper results for movements caused by shrinkage and special paints should be used for thermal movements.

*Chemical Reactions* between backing material and paint film may push the paint off the backing material and lead to softening or discolourise the paint. This effect generally occurs only if moisture is present and is noticeable in oil paints over materials containing cement or lime. The breakdown of bond is because of the crystallization of salts below the paint film and the discolouration is usually due to action of free lime on the pigments.

## Effect of Weather

The paint film is subjected to chemical attack of atmosphere, sunlight and heat, all deteriorating it. Special chemical resistant paints should be applied in industrial areas. Alkali resistant paints weather well in coastal areas. Blue and green colours tend to fade when exposed to bright light. In addition the fierce heat of sun may breakdown the paint film because of the disintegration of the material itself and also because of the thermal movement. The most common defects noticed after painting are as as follow:

***Blistering and Peeling*** are swelling of the paint film and can be defined as localized loss of adhesion between one or more coatings or between primer and parent surface. When swelling is because of oil or grease on the surface it is known as *blistering* and in case of moisture it is called *peeling*. It occurs in nonporous coatings such as oil based paints and enamels. A special heat-resisting type of paint should be used for hot surfaces such as radiators.

*Causes* It is brought about by moist air, oily or greasy surface, or imprisoned gases between the painted surface and the paint film, which expand under the influence of heat.

*Cure* Emulsion paints provide a porous coating and allow the moisture to pass through.

***Checking*** is a mild form of cracking. If hair cracks produced enclose small area it is known as *crazing*. In case the enclosed area is large the defects is called *crocodiling*.

*Causes* It is caused when the paint film lacks in tensile strength and occurs when paint is applied during very cold weather or because of insufficient drying of undercoat.

*Cure* When cracks are very small and do not enlarge with time, the top coating is flattened with emery paper and a fresh coat of paint is applied.

***Cracking*** The cracks extend throughout the entire paint system extending right down to the original surface.

*Causes*

1. Cracks in the plaster or masonry do not let the paint to remain intact.
2. Paint applied on glossy surface.
3. Premature application of top coat before the previous coat has completely dried.
4. Painting improperly seasoned wood.

*Cure* The causes of cracking should be attended to.

***Flaking*** is detachment of paint film from the surface.

*Cause* The moisture penetrates through the cracks on the coatings and the bond between surface and paint film is lost.

*Cure*

1. Use of plastic emulsion paints.
2. Surface should be rubbed with emery paper before applying a fresh coat.
3. All dirt or dust on surface should be removed prior to painting.

***Chalking*** Paint film becomes powder due to insufficient oil in primer.

***Alligatoring*** One layer of paint films sliding over the other one, when a hard paint is applied over a soft one or vice versa.

***Wrinkling*** or crawling appears when the paint film is quite thick or the oil in the paint is more than required. The lower portion of the paint does not dry due to greater thickness of the paint film which shrinks due to drying in course of time.

***Running and Sagging*** Paints applied over smooth and glossy surface do not stick and flow back or towards the unpainted area. This is known as *running* and *sagging*. The surface to-be painted should, therefore, be rubbed with an emery paper before painting.

***Mildew*** Mildew thrives in warm, moist and dark places. Zinc oxide and phenol mercury oleate are very useful to check its growth.

***Bloom*** is identified as dull patches on the finished, polished or painted surface due to defect in the quality of paint or poor ventilation.

***Flashing*** is characterized by the appearance of certain glossy patches on the painted surface. The reasons attributed to this defect are weathering actions, use of cheap paint, and poor workmanship.

***Grinning*** is due to the imperfect opacity of the paint film even after the final coat. The background and its defects can be clearly visible in such a case.

## 17.11 ENAMEL

Enamels consists of bases like zinc oxide, etc. ground in varnish. If desired colouring pigments may be added. They dry quickly and furnish a hard glossy surface. Enamel can be used for internal as well as external works and are generally recommended for application on wood work. Theses are acid resistant, not affected by alkalis, gases and, are waterproof.

*Process of application* The surface of the wood is rubbed with a sand paper and cleaned. A primer coat consisting of titanium white in pale linseed oil is followed by two to three coats of enamel paint.

## 17.12 DISTEMPER

Distemper is made with base as white chalk and thinner as water. Some colouring pigments and glue are added. They are available in powder and paste forms and are substantially cheaper than paints. They are most suitable for plastered surfaces as well as white washed surfaces of interior walls. Oil bound washable distemper, washable oil free distemper, and nonwashable distemper or emulsion paints are some of the types of distemper. In the oil bound distemper, the drying oil is rendered mixable with water. While using they are thinned by adding water. On drying, the oil content in distemper hardens and yields a comparatively durable coating.

#### *Characteristics*

1. The coatings are thick and more brittle compared to paints.
2. They are workable, easy in application but less durable.
3. The film being porous can be applied on even newly plastered surface.

### Distempering

Distempers are applied in the following manner:

***Preparation of Surface*** The surface is thoroughly rubbed and cleaned. In case of a new plastered surface, the surface is kept exposed, to weather, for drying before the application of distemper. If an existing (old) distempered surface is to be redone, surface is cleaned with profuse watering. The efflorescence and patches, if any, should be wiped out by a clean cloth. Cracks, etc. if any should be filled with putty.

***Priming Coat*** A priming coat as recommended by the manufacturer is applied on the prepared surface.

***Final Coat*** Two or three coats of distemper are applied. Each coat should be applied only after the previous coat has dried.

## 17.13 WATER WASH AND COLOUR WASH

Fresh lime slaked with water is mixed thoroughly with water in a tub and then screened through a fine, clean cloth. Thereafter glue, dissolved in water, is added to it. The surface is cleaned and the white wash is applied with jute brushes. A white wash when mixed with colouring pigment such as yellow earth is called *colour wash*.

#### *Characteristics*

1. Lime is toxic for germs, for which white wash is good from hygiene considerations.
2. A bright surface is provided at a very low cost.

*Uses* They are generally recommended for low and medium class houses; ceilings are white washed and walls are generally colour washed.

## 17.14 VARNISH

Varnish is a nearly homogeneous solution of resin in oil, alcohol or turpentine. The type of solvent depends upon the type of resin used and is given in Table 17.5. The oil dries with time and the other solvents evaporate leaving behind a solid transparent resin film over the surface. For rapid drying, driers such as letharage, lead accetate, etc. are used.

**Table 17.5 Materials for making Varnishes**

| *S. No.* | *Resin* | *Solvent* |
|---|---|---|
| 1. | Amber, copal, gum anime | Boiled linseed oil |
| 2. | Common resin, gum dammer, mastic | Turpentine |
| 3. | Lac, shellac, sandarch | Methylated spirit |
| 4. | Raw copal, cheaper types of resins | Wood naptha |

***Note:*** **The commonly used resins are copal, lac or shellac and rosin. Copal is a hard substance and is available from the earth at places where pine trees existed in past. It is available in variety of forms. Lac or shellac is obtained by exudation of some types of insects in India. Rosin is obtained from pine trees.**

Varnishes provide a protected coating and gloss to the surface and intensify the wood grains.

*The objects of varnishing a surface are to:*

1. Brighten the appearance of the grain in wood.
2. Render brilliancy to the painted surface.
3. Protect painted surface from atmospheric actions.

*Characteristics of an ideal varnish:*

1. It should render the surface glossy.
2. It should dry rapidly and present a finished surface which is uniform in nature and pleasing in appearance.
3. The colour of varnish should not fade away when the surface is exposed to atmospheric actions.
4. The protecting film developed by varnish should be tough, hard and durable.
5. It should not shrink or show cracks after drying.

## Varnishing

Varnish is applied as under:

***Preparation of Surface*** The wood work is made smooth by rubbing it with sand paper and the surface is cleaned.

***Knotting*** is the process of covering the knots in the wood work, using any of the following methods.

*Size knotting* A coat of red lead ground in water mixed with glue size is applied. After it dries another coat of red lead ground in oil and thinned by boiled turpentine oil is applied.

*Patent knotting* Two coats of varnish prepared by dissolving shellac in methylated sprit or wine, are used.

***Stopping*** The surface of the wood work is then rubbed again and cleaned. Before rubbing, the surface is applied with size of hot, weak glue.

***Varnish coat*** Varnish is then applied in two coats. The second coat is applied after the first has dried.

## Types of Varnishes

Varnishes are classified as oil, spar, flat, spirit and asphalt varnishes.

***Oil Varnish*** uses linseed oil and takes about 24 hours to dry. Hard resins such as amber and copal are dissolved in linseed oil. If the varnish is found unworkable, a small amount of turpentine oil may be added. It is suitable both for interior and external works.

***Spar Varnish*** derives its name from its use on spars and other parts of ships. It gives sticky effect in warm weather and is not used indoors.

***Flat Varnish*** materials such as wax, metallic soap or finally divided silica when added to varnish produce a dull appearance on drying and are known as flat varnish.

***Spirit Varnish*** is resins of soft variety such as lac or shellac dissolved in spirit. The examples are French polish, lacquer and shellac varnish. It dries very quickly. These are not durable and are easily affected by weathering action.

***Asphalt Varnish*** is made by dissolving melted hard asphalt in linseed oil with a thinner such as turpentine or petroleum spirit. It is used over shop fabricated steel works.

***Water Varnish*** is shellac dissolved in hot water to which enough quantity of either ammonia, borax, soda or potash is added. These are used for varnishing maps and pictures.

## 17.15 FRENCH POLISH

It is a type of spirit varnish, prepared by dissolving resin in methylated spirit at room temperature for use on hardwood substances to hide the grain defects. The surface is made smooth by rubbing. A filler mixed with desired colour is prepared to the consistency of a paste applied to the cracks, pores, etc. The surface is rubbed after drying and dusted off. Two coats of polish are then applied. The filler material is prepared by mixing 2 kg of whiting in 1.5 litres of methylated spirit or by mixing Plaster of Paris, red ochre and linseed oil.

## 17.16 WAX POLISH

It consists of bees wax dissolved in turpentine and is used for highlighting the grain over wooden surfaces. The polish is rubbed over the surface with rag until a bright appearance is obtained. Generally two coats are applied. It may also be used over marble with 1 part of was dissolved in 4 parts of hot turpentine or by mixing wax, linseed oil, turpentine oil and varnish in the ratio 2 : 1.5 : 1 : 05, by weight.

## 17.17 MISCELLANEOUS PAINTS

***Aluminium Paints*** consist of aluminium powder (as base) held in suspension by varnish. They are highly heat reflective and resistant to acid fumes. Aluminium paints are used for painting metal roofs, silos, machinery, poles, towers and storage tanks. It provide a very attractive appearance to the surface and the painted surface is visible even in darkness. Aluminium paints have high dispersive property—over 200m$^2$/ litre.

***Anticorrosive Paints*** Linseed oil is used as vehicle with dry red lead, sublimed blue lead, zinc oxide and iron oxide and zinc chromate as pigments. They are used for preservation of structural steel work against acid fumes and adverse weather conditions. The anticorrosive paints impede or obstruct the corrosion by reducing the direct access of air and water to the metal. These paints should have quick drying and hardening properties.

***Asbestos Paints*** The main constituent is fibrous asbestos. These are used for stopping leakage in metal roofs, painting of spouts, gutters, etc. and sometimes on the outer surface of basement wall to prevent dampness. Absestos paint is also called *fire proof paint*.

***Bitumenous Paints*** are made of asphalt bitumen dissolved in mineral spirit or nephtha. They are black in colour, but suitable colouring pigments may be added for desired colour. They are alkali resistant and are used to paint exterior brick work, concrete and plastered surfaces and to reduce the moisture permeability. Bitumenous paints are also used over iron works under water. When exposed to sunlight they deteriorate very fast.

***Bronze Paints*** Generally a pigment such as aluminium or copper powder is used with a vehicle like nitrocellulose lacquer. They are highly reflective and is applied over radiators.

***Cellulose Paints*** are made by celluloid sheets, amyl-acetate substitute or nitrocotton dissolved in petroleum. Also known as *lacquers*, they are colloidal dispersion of cellulose derivative, resin and plasticisers in solvent and dilutents. Castor oil is also added to improve adhesion, toughness and smoothness of the paint film. A cellulose paint hardens by evaporation of the thinning agent, whereas an ordinary paint hardness by oxidation. Being very costly their use is restricted to painting cars, ships and airplanes. The trade names are spray paint, Ducco etc. Cellulose paints are not affected by adverse weather conditions.

***Casein Paints*** Casein, a protein substance extracted from milk, curd, is mixed with a base like whiting and lithophone. They are available in powder or paste form. They are used over new plaster surface, walls and ceilings. A drying varnish is added when these are used over exterior surfaces of buildings. Casein paints can be tinted in any colour.

***Cement Based Paints*** (IS 5410) White or coloured Portland cement with (OPC minimum 65 per cent) forms the base. They are thinned with water during application. Proper curing is necessary for strength and durability. Cement paints are durable, strong and display better water-proofing qualities and are used on exterior surfaces of buildings. Mixed with boiled linseed oil they are also used over corrugated iron sheets. To get good results, an aqueous solution of sodium silicate and zinc sulphate is applied as primary coat on the surface to be painted.

***Rubber Based Paints*** Rubber treated with chlorine gas is dissolved in solvent and desired pigment is added. These paints are resistant to acid, alkalis and dampness. Rubber based paints are used over concrete and cement plastered surfaces.

***Plastic Emulsion Paints*** (IS: 5411 parts I & II) are essentially a dispersion of rubber-like resin polyesterene, and polyvinyl acetate in water and are prepared by grinding suitable pigments (titanium dioxide ) in an emulsion of water (vehicle) and film forming drier, *e.g.*, Co and Mn. Sometimes oil is used as vehicle. In the former case the emulsifying agents are sodium or ammonium soaps whereas in the latter case metallic soaps of magnesium or zinc are used. Stabilizers such as proteins (dextrin, starch, casein) are added to impart chemical resistance to the emulsion. Moreover, protein provides body thereby improving brushing. Antifoaming agents such as pine oil and kerosene are added to check any excessive foam formation by the agitation of emulsion paint during its manufacture. These paints should become surface dry within 15 minutes and hard dry within 4 hours and are alkali resistant. Plastic emulsion paints are useful in porous and/ or wet surface. The emulsion coats are less odorous, non-inflammable, quick drying and easier to apply than other paints.

***Plastic Paints*** have plastics as base with water as thinner. They have high covering capacity and give a neat, decorative and pleasing appearance to the surface. Owing to their high cost The plastic paints are mainly used for interiors of auditoriums, showrooms, modern houses and offices. A typical composition of one litre of plastic emulsion paint is 0.20 kg of binder, 0.50 kg of pigment, 0.10 kg of other solids and 0.60 kg of water. On drying, the water evaporates leaving behind a smooth film. One litre of plastic paint covers about 15 $m^2$ of wall surface per coat.

## EXERCISES

1. Describe briefly how the following are prepared:
   (a) Oil paint (b) French paint
   (c) Enamel (d) Wax polish
   (e) Aluminium paint (f) Cement paint
2. (a) What are the various ingredients of paints? State the functions of each of them.
   (b) What are the characteristics of good oil paints?
   (c) Why are steel structures painted? Describe the procedure of painting an old steel structure.
3. (a) What is the function of adulterant in a paint?
   (b) Discuss the reasons for the causes of defects in painting work.
   (c) What precautions should be exercised while painting?
4. (a) How painting of new wood work is done?
   (b) Describe in details the types of defects in painted work.
   (c) What are the differences between paints, varnishes and distemper?
5. Name and describe the properties of:
   (a) Bases (b) Driers
   (c) Thinners (d) Adulterants
6. Write short notes on
   (a) Ingredients of paints (b) Defects in painted work
   (c) French polish (d) Enamels
   (e) Colour wash (f) Distemper
7. (a) What are the ingredients of varnish?
   (b) Classify different types of varnish and briefly describe them.
   (c) What qualities a good varnish has?
8. (a) How would you judge the quality of an oil paint?
   (b) What is distempering? How is it done?
9. (a) What is meant by spreading capacity of paint?
   (b) Describe briefly how an oil paint is prepared.
10. (a) What are the objects of varnishing a surface? Where will you prefer a varnish to a paint?
    (b) Give the requirements of paints suitable for:
    (a) Wood (b) Iron (c) Cement concrete
11. Write shorts notes on
    (a) Aluminium paint (b) Asbestos paint
    (c) Bituminous paint (d) Fire proof paint
    (e) Anti corrosive paint (f) Graphite paint

12. (a) What are the different types of paints used for protecting steel structures in coastal regions?
    (b) What preparatory work should be done before repainting an old painted surface?
13. (a) Describe the procedure of following:
    (a) Painting of new wood work
    (b) Painting of an old iron work
    (c) Painting of a plastered surface
    (d) Distempering
    (e) Varnishing

## OBJECTIVE TYPE QUESTIONS

1. Match List-1 with List-II and select the correct answer using the codes given below the lists:

| List-I | List-II |
|---|---|
| A. Pigment | 1. Turpentine |
| B. Drier | 2. Iron oxide |
| C. Thinner | 3. Zinc sulphate |
| D. Extender | 4. Aluminium silicate |

Codes:

| | A | B | C | D | | A | B | C | D |
|---|---|---|---|---|---|---|---|---|---|
| (a) | 3 | 2 | 1 | 4 | (b) | 3 | 2 | 4 | 1 |
| (c) | 2 | 3 | 1 | 4 | (d) | 2 | 3 | 4 | 1 |

2. The function of base in paint is
   (a) to provide a film on surface
   (b) to hide imperfections of surface
   (c) to reduce shrinkage cracks in paint film
   (d) to bring down the overall cost
3. Which of the following is not a vehicle in paints?
   (a) Linseed oil (b) Poppy oil
   (c) Turpentine oil (d) Tung oil
4. Which of the following is not a drier in paints?
   (a) Lead oxide (b) Lead acetate
   (c) Red lead (d) Lithophone
5. Which of the following is not a defect in paints?
   (a) Blistering (b) Stopping
   (c) Crocodiling (d) Foxiness
6. In fire proof paints, the main constituent is
   (a) Aluminium powder (b) Red lead
   (c) Copper powder (d) Asbestos fibres
7. Which of the following is not a varnish?
   (a) Spar varnish (b) Flat varnish
   (c) Asphalt varnish (d) Methyl varnish

8. Which of the following is not a binder?

| | |
|---|---|
| (a) Linseed oil | (b) Turpentine oil |
| (c) Nut oil | (d) Poppy oil |

9. Which of the following is not a drier?

| | |
|---|---|
| (a) Letharge | (b) Lead acetate |
| (c) Lithophone | (d) White lead |

10. The quantity of drier in paints is limited to

| | | | |
|---|---|---|---|
| (a) 2% | (b) 4% | (c) 6% | (d) 8% |

11. Which of the following increases by adding extruders in paints?

| | |
|---|---|
| (a) Washability | (b) Adhesion |
| (c) Durability | (d) Pigment volume concentration |

12. Distemper is used to coat
    (a) external concrete surfaces
    (b) interior surfaces not exposed to weather
    (c) wood work
    (d) compound walls
13. Putty is made up of
    (a) white lead and turpentine
    (b) powered chalk and raw linseed oil
    (c) red lead and linseed oil
    (d) zinc oxide and boild linseed oil
14. Blistering in paints is
    (a) mild cracking of paint film
    (b) swelling of paint film
    (c) detachment of paint film
    (d) separation of paint film in layers
15. Consider the following statements:
    Casein glue is
    1. obtained from milk
    2. obtained from the blood of animals
    3. used in painting of metals
    4. used in the plywood industry
    5. white in colour
    6. red in colour

    Of these statements:

| | |
|---|---|
| (a) 1, 3 and 5 are correct | (b) 1, 4 and 5 are correct |
| (c) 2, 3 and 6 are correct | (d) 2, 4 and 6 are correct |

16. Casein paints are used over

| | |
|---|---|
| (a) new plastered surfaces | (b) wood members |
| (c) mild steel surfaces | (d) aluminium sections |

17. Varnish is a homogeneous soloution of resin in

| | |
|---|---|
| (a) kerosene oil | (b) alcohol |
| (c) naptha | (d) linseed oil |

18. Which of following is an example of spirit varnish?
    (a) French polish (b) Asphalt varnish
    (c) Oil varnish (d) Spar varnish
19. In plastic paint thinner used is
    (a) oil (b) spirit (c) water (d) naptha

## Answer Table

1. (c) 2. (c) 3. (c) 4. (d) 5. (d) 6. (d) 7. (d) 8. (b) 9. (d) 10. (d)
11. (d) 12. (b) 13. (b) 14. (b) 15. (b) 16. (a) 17. (b) 18. (a) 19. (c)

# 18

# Tar, Bitumen and Asphalt

## 18.1 INTRODUCTION

Bitumen and bituminous materials have been known and used in construction works since ancient times, approximately 6000 B.C. Asphalts were used as cements to hold stonework together in boat building and as waterproofing in pools and baths. Some asphalt was mixed with stand and used to pave streets and palace floors. The Egyptians made use of asphalt in the mummification process and as a building material. The Greeks and Romans not only used asphalt as a building material but also used burning asphalt as a military weapon. The asphalt used by these ancient civilizations was *natural asphalt* formed when crude petroleum oils rose to the earth's surface and formed pools. The action of the sun and wind drove off the lighter oils and gases, leaving a heavy residue. The residue was asphalt with impurities such as water and soil present. Using crude distillation process, cementing and waterproofing materials were obtained.

The word bitumen comes from the original sanskrit word Gwitumen applied to native asphalts as fuel. Bitumens are mainly composed of a mixture of high-molecular hydrocarbons, methane, napthane and other aromatic series and their oxygen or sulphur derivatives. Tar and asphalt are the two varieties of bituminous materials. Tars are bituminous condensates obtained in the process of destructive distillation of coal, petroleum, wood and other organic materials at high temperature without access of air. They are composed of hydrocarbons and their sulphurous, nitrous and oxygen derivatives. Asphalt on the other hand is a naturally occurring bitumen which is a combination of an inorganic mineral matter either calcareous or siliceous and an organic matter—a chemical compound of carbon and hydrogen.

Bitumens and bituminous materials are being extensively used in damp proofing the basements, floors, roofs, damp proof courses; painting timber and steel structural elements;

as adhesives and caulking compounds, and tars are used as binders in road works. When combined with aggregate these are also used to provide floor surfaces. Bitumens are now more commonly used for building purposes than is tar.

## 18.2 BITUMEN

Bitumen is a noncrystalline solid or viscous material derived from petroleum, by natural or refinery process and substantially soluble in carbon disulphide. It is asphalt in solid state and mineral tar in semi fluid state. Bitumen is brown or black in colour.

The main constituent is petrolene—a yellowish oily substance, an excess of which makes bitumen to melt at low temperature and, asphaltene—hard black substance, an excess of which makes bitumen brittle and non-plastic. Its compositions is carbon 87 per cent, hydrogen 11 per cent and oxygen 2 per cent.

Bitumen is not affected by light, air or water individually, but in combination they can make it brittle, porous and susceptible to oxidation forming blisters and cracks. It becomes soft at temperatures between 30°–100° C (no sharp melting point), and therefore must be protected from exposure to heat. It is insoluble in water and fairly resistant to most acids. Although bitumen is combustible, composite products, such as mastic asphalt, are not readily ignited. Physical and chemical requirements of bitumen for use in buildings is given in Appendix II.

### Forms

*Bitumen emulsion* is a liquid product containing bitumen to a great extent in an aqueous medium. The bitumen which is in a very finely divided state (globules of about 2 micron diameter) is kept suspended in the aqueous medium with the help of some suitable stabilizing agents. Depending upon the stability of the protective coating of the emulsifying agent, the emulsions are classed as rapid setting (RS), medium setting (MS) and slow setting (SS). These emulsions are always stored in air tight drums.

*Blown bitumen* is obtained by passing air under pressure at a higher temperature through the bitumen. It can be used as roofing and damp-proofing felts, in the manufacture of pipe asphalts and joint fillers, as heat insulating material, etc.

*Cut-back bitumen* is obtained by fluxing asphaltic bitumen in presence of some suitable liquid distillates of coal tar or petroleum. It is mainly used in road construction and in soil stabilization (2–4%). Cut-backs are commercially manufactured in the following three groups.

1. Rapid curing (RC) cut-backs containing naptha or gasoline.
2. Medium curing (MC) cut-backs containing kerosene.
3. Slow curing (SC) cut-backs containing light oils as fluxing agents.

Each of the above group of cut-backs is further subdivided into six categories from 0 to 5. The six different viscosities are named by numbers 0 to 5 in the increasing order of viscosity.

*Plastic bitumen* consists of bitumen, thinner and a suitable inert filler. The amount of inert filler is about 40 to 45 per cent. It is used for filling cracks in masonry structures, for stopping leakage, etc.

*Straight run bitumen* is the bitumen being distilled to a definite viscosity or penetration without further treatment.

## Classification

***Based on Source:*** Bitumens are classed as natural and petroleum bitumens.

***Natural Bitumen:*** Pure natural bitumen occurs rarely. Limestones, sandstones and soils impregnated with bitumen are frequently found. It originates from the accumulation of petroleum in the top layers of earth crust through migration, filling pores and cavities of rocks, under the action of high temperature and pressure.

The natural bitumen is dark-brown in colour which on heating gradually softens and passes to liquid state and on cooling solidifies. It is insoluble in water but dissolves in carbon disulphide, chloroform, benzene and very little in gasoline. Natural bitumen may be extracted from bituminous rocks by blowing in kettles or dissolving in organic solvents (extraction).

***Petroleum Bitumens*** are product of processing crude petroleum and its resinous residues. These are classified as residual asphaltums, oxidized, cracked and extracted bitumens.

*Residual Asphaltums* are black or dark-brown solid substances at normal temperatures, obtained by atmospheric-vacuum distillation of high-resin petroleum after topping of gasoline, kerosene and fractions.

*Oxidized Bitumen* are produced by blowing air through petroleum residues. Oxygen from air combines with hydrogen of the residues to give water vapour. The petroleum residues thicken because of polymerization and condensation.

*Cracked Bitumen* are obtained by the cracking—high temperature decomposition—of petroleum and petroleum oils allowing high yield of gasoline. Blowing of air through residues gives oxidized cracked bitumens.

***Based on Consistency** (at 18° C):* These are classified as solid, semi-solid and liquid bitumens.

***Based on Application:*** Bitumens are classified as road construction bitumen, building bitumen and roofing bitumen.

***Uses*** Bitumen is used for manufacture of roofing and damp proofing felts, plastic bitumen for leak stops, waterproof packing paper, pipe asphalt, joint filler, bituminous filling compounds for cable boxes, for sealing accumulators and batteries. It is also used for fixing of roofing felts, dam proofing felts and for heat insulation materials for buildings, refrigeration and cold storage equipments.

### *Properties of Bitumen*

The various properties are viscosity, ductility and softening point.

***Viscosity*** depends greatly on temperature. At lower temperature, bitumen has great viscosity and acquires the properties of a solid body, while with increase in temperature the viscosity of bitumen decreases and it passes into liquid state.

***Ductility*** depends upon temperature, group composition and nature of structure. Viscous bitumens, containing solid paraffins at low temperatures are very ductile.

***Softening Point*** is related to viscosity. Bitumen needs sufficient fluidity before specific application.

***Resilience*** Bitumen is resilient, non-rigid and as such it is capable of absorbing shocks and accommodate itself to the movement in structure due to temperature, settlement or shrinkage.

### Bituminous Sheets

These are manufactured by running refined bitumen on to paper of different thicknesses and qualities. These sheets are used for damp proof courses. These can be bent without cracking. A lead sheet sandwiched between two layers of refined bitumen makes the sheet acid-proof.

### Fluxed Bitumen

When bitumen is used in hot applications, the process is known as *hot mopping* in which case a suitable flux is added. Fluxing is essentially a softening process. The flux is usually a heavy oil added primarily to control the final setting hardness, but may also serve to reduce the temperature at which a hot applied bitumen becomes workable.

## 18.3 TAR

It is a dark (deep black) viscous liquid produced by destructive distillation of organic material such as coal, oil, lignite and wool. Depending upon the source of origin it is classified as coal tar, wood tar and mineral tar. Tar is restraint to petroleum-based solvents. It has very low bitumen content.

***Coal Tar*** is obtained, as a by product in the destructive distillation of coal, or in the manufacture of coal gas. It is heavy, strong smelling and black. These generally have high specific gravities and viscosities, and good adhesive properties. On the further distillation of coal tar (from coal gas) coal naphtha, creosote oil, dyes, etc. are obtained, coal tars for road works are obtained by coking coal or melting together coal pitch with oils or dehydrated raw tar.

*Composition* A typical composition of coal tar from coke oven plant is true pitch 72 per cent, heavy oils 15 per cent, medium oil 6 per cent, light oil 6 per cent, moisture and ash 1 per cent.

*Uses* For coating of wooden poles, sleepers, iron-poles, latrine walls, etc.

***Wood Tar*** is obtained by the destructive distillation of resinous wood (pine, etc.). It contains creosote and as such is a very strong preservative. On further distillation wood tar produces wood creosote. Compared to coal tar creosote, it is an inferior preservative for wood. The residue left after the distillation is known as pitch.

There are five grades of road tars:

RT-1 : For surface painting under exceptionally cold weather conditions, hill roads at very high elevations.
RT-2 : For standard surface painting under normal climatic conditions.
RT-3 : For surface painting and renewal coats and is also used for premixing chips in top courses.
RT-4 : For premixing tar macadam (base course).
RT-5 : For grouting.

***Mineral tar*** is obtained by the distillation of bituminous shales. Some examples are tarmac, tar paving and tar macadam.

*Tarmac* is ironstone slag impregnated with tar oils. It is impervious to water and used in road pavement.

*Tar Paving* is a composition of limestone and coaltar. It is heated before use.

*Tar Macadam* is used for road pavement. Soft rock materials such as limestones blast furnance cinder, etc. are heated in a furnace and then mixed with boiling coal tar, pitch and creosote oil. The mix is applied in road soon after cooling and rolled.

## 18.4 PITCH

Most pitches used in building are obtained either as the residue of the direct distillation of crude tar produced by the high temperature carbonization of coal as a waste product. However, by fluxing back such pitch residues with high boiling coal tar distillates the material can be suitably conditioned to give products of desired softening points for a number of particular uses.

Coal tar pitch is classified on the basis of softening point into four grades as given in Table 18.1.

**Table 18.1 Requirements for Coal Tar Pitch**

| *Grade* | *Softening* | *Sp.gr.* | *Distillate per cent by wt. below 270°C (Max.)* | *Distillate per cent by wt. below 300°C (Max.)* | *Matter insoluble in toluene as % by weight (Max.)* | *Ash % by weight (Max)* |
|---|---|---|---|---|---|---|
| Soft pitch | 45–55° | 1.20–1.30 | 4 | 8 | 25 | 0.50 |
| Soft medium pitch | 58–68° | 1.22–1.32 | 4 | 8 | 28 | 0.50 |
| Hard medium pitch | 70–80° | 1.22–1.32 | 3 | 4 | 30 | 0.75 |
| Hard pitch | 82–92° | 1.28–1.38 | – | – | 35 | 0.80 |

***Composition***

| | |
|---|---|
| Carbon | 75% |
| Hydrogen | 8% |
| Oxygen | 16% |
| Nitrogen | 1% |
| Ash and sulphur | Little |

*Uses* Pitch is extensively used as ingredient in a number of water proofing, protective and binding compounds in masonry, timber and steel structures. It is also used in the manufacture of tar felt and flooring mastics, and as a base for coal tar paints designed mainly for cold applications. The pitch paints set by drying of the solvent.

## 18.5 ASPHALT

Asphalt is a natural or artificial mixture in which bitumen is associated with inert mineral matter. It is black or brownish black in colour. At temperature between 50–100°C it is in liquid state whereas at temperature less than this it remains in solid state. Because it is a thermoplastic material it softens as it is heated and hardens as it is cooled. It is the basic paving material in use today.

***Natural Asphalt*** is also known as *native asphalt*. When obtained from lakes it is termed as *lake asphalt*. It is used for making pavements, for water proofing of structure, stopping vibrations in machine foundations, tunnels and subways, in manufacture of marine glue, and in lining trenches.

***Rock Asphalt*** is a naturally occurring rock formation, usually limestone or sandstone intimately impregnated throughout its mass with 6–14% bitumen.

***Refined Asphalt*** is obtained by heating pitch to drive off the water and to draw off the mineral matter by segregating the impurities.

*Composition*

| | |
|---|---|
| Bitumen | 52% |
| Inorganic matter | 38% |
| Organic matter | 10% |

***Mastic Asphalt*** is manufactured by adding pulverized natural rock gradually to molten refined bitumen, agitating the mixture for about 5 hours (200–250°) and placing it into moulds for cooling. The mass consolidates into hard elastic blocks which can be remelted when used for pavements. It is tough, durable, nonabsorbent, damp proof, noninflammable, and noiseless. When non-bituminous limestone is mixed with bitumen of residual type it is brown as synthetic mastic asphalt.

***Liquid Asphalt*** is the viscous residue obtained by the distillation of asphaltic base crude oil to 425°C.

***Cut-back Asphalt*** is derived by distillation of asphalt in a volatile solvent. It contains about 80 per cent asphalt and remainder the solvents.

***Artificial Asphalt*** is the pitch residue obtained by evaporation of the volatile constituent of coal tar. It is formed of an admixture of coaltar, pitch, ground iron slag, sawdust, chalk, etc.

*Composition*

| | |
|---|---|
| Bitumen | 12% |
| Minerals and sand | 87% |
| Organic matter | 1% |

***Asphaltic Cement*** is prepared by oxidizing asphalt at a high temperature the lighter oils vapourize and are drawn off at their condensation temperature, leaving a residual material–aspaltic cement. It is used for flooring and water proofing and in expansion joints in concrete.

A comparison of tar and asphalt is given in Table 18.2.

**Table 18.2 Properties of Tar and Bitumen**

| *S.No.* | *Property* | *Asphalt* | *Tar* |
|---|---|---|---|
| 1. | Colour | Brownish-black | Brownish-black |
| 2. | Viscosity | Viscous | Viscous |
| 3. | Sp.gr. | 0.92–1.02 | 1.08–1.24 |
| 4. | Manufacture | Fractional distillation of crude petroleum | Fractional distillation of organic material |

| | | | |
|---|---|---|---|
| 5. | Affinity to water | Does not weather well in presence of water | Greater surface tension and the tar coatings remain intact even in the presence of water |
| 6. | Temperature changes and softening | Has a wider range of temperature for hardening | More susceptible to temperature changes |
| 7. | Durability | High | Loses volatile matter very fast |
| 8. | Hardening | Slow | Quicker |
| 9. | Toxicity | Not | Toxic and used as preservative |
| 10. | Solubility | Soluble in $CS_2$ | Insoluble in $CS_2$ |

## 18.6 THE CHOICE OF PRODUCT

The choice of product will depend upon the use to which it is put; a broad classification of typical uses can be made as follow:

*Fluxed bitumen and pitch* Damp proof membranes; adhesives for wood block flooring; adhesive for cork slabs and insulating lining; saturants and adhesives for felts.

*Asphalt mastic* Tanking; damp proof courses; joint less flooring; tiled flooring; roofing.

*Pitch mastic* Joint less flooring.

*Pitch and bitumen ("tar base") paints* Floor paints; water proofing and decoration (external); isolating layers under plasters, etc., adhesive for linoleum and also (in emulsion form) for wood block flooring; caulking compounds (containing fillers); pipe wrappings; protection of metals against corrosion and decay; and protection of brickwork (as in factory chimneys).

## 18.7 GENERAL PROPERTIES

All bituminous substances have general property of resisting the passage of water. Other factors being equal, those products containing the highest percentage of the base material—*i.e.*, pitch or bitumen—will give the greatest protection. Pigmented products, light in colour, are therefore less efficient in this respect than those in which the quantity of pitch or bitumen necessitates a dark colour.

In general the hot applied material and those constituted with solvent—*i.e.*, not an emulsion—are more likely to withstand pressure: on other hand, emulsions are satisfactory when their purpose is to shed water from vertical or near vertical surface.

*Durability* Bituminous materials are known to have a long life—some asphalt mastic roofs are 100 years old—but they may be affected by sunlight and by other agencies such as acid, fats, etc. and also by mechanical damage. Defects due to natural weathering may be overcome by periodic maintenance and renewal of the top dressing. Effects of acid, mechanical damage etc. may be overcome by choosing the correct type and grade of material.

The decision as to choice of material is one for which the architect must rely very largely on the manufacturer, but in so far as it is possible to generalize, those product incorporating principally natural bitumens are thought to be superior to those incorporating derivative bitumens.

*The Effect of Sunlight* Exposure to sunlight over a long period is known to affect bituminous material adversely, and the degree to which they are affected will depend upon the type of material used. Experience indicates that bitumen is likely to be more durable in this respect than pitch, and its use is recommended for permanent roofing work.

*Effect of Heat* Bituminous material will revert to a plastic condition upon heating, and when used on roof or in exposed positions are liable to soften from the effect of the sun's heat, especially if insulation is provided between the surface of the structure and the covering. It is important to choose a grade of material best suited to withstand this, and to ensure that in all vertical application an adequate key is provided in order to prevent the material from flowing. Similar softening will occur if the material is applied near hot air exhausts, near radiators or other heat sources.

On roofs, a secondary effect of solar heating is the formation of blisters. These occur when the protective covering does not adhere uniformly to the substructure and the air entrapped below the covering expands upon heating. The defect may be overcome by laying the bituminous material on a sheathing felt to which it will readily adhere, thus isolating it from the surface of the structure. The likelihood of failure in this respect can be further reduced by providing a top surface which is light in colour and which reflects the sun's ray. This may be done simply by lime washing or by covering the roof with light coloured chippings; and oil paint must not be used for this purpose.

*Resistance to Fire* Mastic asphalt and pitch mastic are not readily combustible and entail no increase in the fire hazard.

*Appearance* The appearance of floors composed of bituminous material is reasonably good, though they are necessarily dark in colour and are usually limited to reds and browns. However, they have to be well maintained.

Bituminous paints may be obtained in a wider range of colours and tones, some of which are comparatively light. The paints can be manufactured to produce a high gloss if required.

*Noise* Floors composed of bituminous materials are moderately noisy.

*Slipperiness* Floors of bituminous material are reasonably non-slip, but frequent polishing increase their slipperiness.

*Effect of Physical Loading* When used under load, there is always a tendency for bituminous material to flow. The effect is sometimes to be seen in damp proof course squeezing out, and in floors which have become indented by point loads such as chair and table legs. It is important therefore to choose the correct grade of material under these conditions.

Where the flooring is softened by heat, foot traffic also will cause indentations, and the material is rarely sufficiently hard—even when polished—to resist scratching.

*Effects of Acid* Bituminous materials used for acid-resisting construction can be relied upon to be efficient, provided the nature of the acid, working temperatures and other relevant data is duly considered.

*Effects of Fats and Oils* In so far as resistance to fats and oils is concerned, products based on pitch are likely to be superior to those based on bitumen. None of the material will withstand wholly the effects of oils, and even polishes containing oils may be injurious.

### *Relation to other Material*

Substructure the more rigid products such as asphalt mastic and pitch mastic are liable to cracking if there is differential movement in the substructure, such as occurs in wood boarded roofs. They should therefore always be laid on an isolating membrane such as sheathing felt. On the other hand, an adequate key should always be provided on vertical surfaces, where there would otherwise be a tendency for the bituminous material to flow. It should be remembered that adhesion to a wet background is always liable to be weak.

Paint—Bituminous materials should not be painted with any paint having a strong binder, since to do so may cause the bituminous material to craze. They should not be painted with oil or other paints which are light in colour, since the pitch or bitumen will always bleed though. Light coloured bituminous paints are, however, satisfactory as a decorative finish to bituminous ground.

## 18.8 TESTING

Bituminous cements are tested for consistency, heat, solubility and composition, ductility, specific gravity and adhesion.

### Consistency Test

Furol viscosity test, Engler viscosity test, penetration test, or softening point test may be performed for the purpose.

***Viscometer Consistency Test*** is conducted in Fural viscometer shown in Fig.18.1. It consists of a cylindrical vessel with a standard orifice at the bottom. The vessel is filled with the bitumen sample and time taken, in seconds, for 50 ml of bitumen sample to flow out through the standard orifice denotes its viscosity.

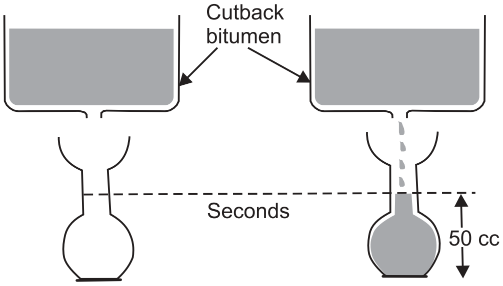

**Fig. 18.1 Furol Viscometer**

***Engler Specific Test*** In this method the time taken for a 50 cc of the tar sample is divided by the time taken, in seconds, by an equal quantity of water. The quotient gives the specific viscosity of the sample.

***Penetration Test*** determines the hardness of the bituminous materials by measuring the depth in millimeter to which a standard needle penetrates vertically under specified conditions of load, time and temperature. The needle consists of a 1.00 to 1.02 mm diameter rod tapered between 8°40′ to 9°40′. A truncated cone is formed at the pointed end, with the diameter of the smaller base: 0.14 to 0.16 mm. The test is normally conducted at a temperature of 25°C by loading the needle for 5 seconds with a weight of 100 g, and allowing it to penetrate into the sample placed in a small cup below. The apparatus used are standard penetrometer (Fig.18.2), sample cup, water bath, thermometer, benzene solution, bitumen sample, etc.

*Procedure* The bitumen sample is softened to a pouring consistency and is then poured into the cup to a depth at least 15 mm in excess of the expected penetration. The sample is placed in a temperature controlled water bath and maintained for one hour at 25°C. The sample container is taken out of bath and is placed on penetrometer table under needle. The needle is kept touching the surface of the bitumen with the dial set zero and the initial reading is recorded.

The needle is then released for 5 seconds. It will penetrate into the bitumen. The needle, is locked and the final reading is recorded. The needle is taken out from bitumen, washed with benzene solution and the process is repeated. Penetration value will be the average of the three results.

*Significance* The penetration test measures the consistency of bitumen binders so that they can be classified into standard grades but on its own has no relation to binder quality. However, bitumens are known to reduce in penetration with age and to develop cracking tendencies. Penetration values below 20 have been associated with bad cracking of road surfacings, while cracking rarely occurs when penetration exceeds 30. Pentration tests carried out at different temperatures, can also determine the temperature susceptibility of a bitumen. Where resistance to flow is important, *e.g.*, when bitumen is used to fill cracks in concrete road slabs, a small change in temperature is desirable.

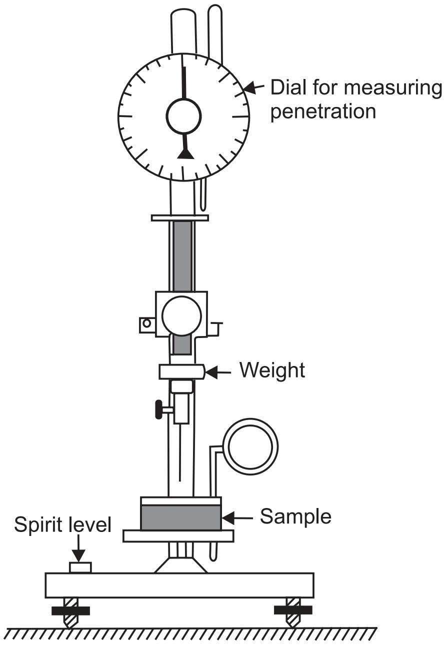

**Fig. 18.2 Penetrometer**

***Softening Point Test*** This test is done to determine temperature susceptibility of the bitumen. The ring and ball softening point test is extensively used to evaluate the consistency of bituminous binders. The test consists of placing a 9.5 mm diameter steel ball on a binder sample placed in a steel ring (Fig. 18.3) and its temperature is raised until a value is reached when the test sample is sufficiently soft to allow the ball enveloped in binder, to fall through a height of 25 mm. The water temperature at which this occurs is read to nearest 0.5°C and is called the softening point of the bituminous binder.

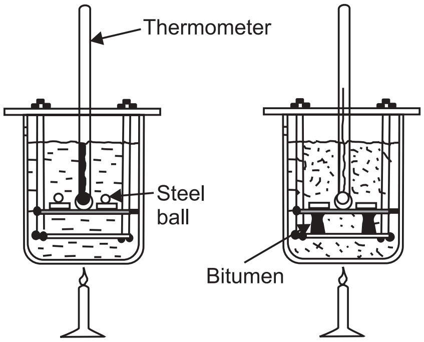

**Fig. 18.3 Softening point test (Ring & Ball Apparatus)**

*Procedure* The sample binder is heated approximately between 75°–100°C above softening point and it is ensured that the sample is completely fluid, free from water and air bubbles. If necessary it is filtered. The brass rings are also heated to a temperature approximately equal to that of molten binder and are placed on a metal plate coated with mercury or a mixture of glycerin and dextrine. The brass rings are filled with molten binder slightly above the level of ring. After cooling for about 30 minutes in air, the excess bitumen is removed with a warm sharp knife. The apparatus is assembled with the rings, thermometer and ball guides in position, and the water bath is filled to a height of 50 mm above the upper surface of the rings with freshly boiled distilled water at a temperature of 5°C for 15 minutes. A ball, previously cooled to 5°C is placed in each ball guide. The bath is then heated and the liquid is stirred so that the temperature rises at a rate of 5° ± 0.5°C per minute. The temperature, for each ring and ball is recorded at the instant the binder surrounding the ball touches the bottom plate of the support, if any, or bottom of the bath. The process is repeated. The mean of the two determinations gives the softening point. The hardest grade of bitumen available in India is 30/40, which has a softening point of 50-60°C. The softest paving bitumen is 180/200 grade, having a softening point of 30-45°C.

*Significance* Bitumen does not suddenly change from solid to liquid state, but as the temperature increases it gradually becomes softer until it flows readily. All semi-solid state bitumen grades need sufficient fluidity before they are used for application with the aggregate mix. For this purpose bitumen is sometimes cutback with a solvent like kerosene. The common procedure, however, is to liquefy the bitumen by heating. The softening point is the temperature at which the substance attains a particular degree of softening under specified condition of test. Softening point is found to be related with viscosity. The ring and ball test results with tars having softening point approximately 20°C lower than equiviscous temperatures. Bitumen with higher softening point is also sometimes used to specify hard bitumens and pitches. The range of softening point is from 30°–60°C for bitumen from Assam petroleum.

### Viscosity Test

Viscosity defined as inverse of fluidity defines the fluid property of bituminous material. It is measured by determining the time taken by a specified quantity of binder to flow from a cup through specified orifice at a given temperature. Because of the great variation of this time for different binders, it is not practicable to determine the viscosity of all binders under same conditions of temperature, heat and flow. So different viscometers are in use. A typical tar viscometer is shown in Fig. 18.4. The time taken in seconds by 50 ml of binder to flow from a cup through a 10 mm (or 4 mm) orifice under an initial head and at known test temperature is measured. The flow times should lie between 10–140 sec, so that temperatures for tars are chosen to ensure these conditions. With cutback bitumens the 10 mm orifice cup is used at 25°C for materials whose viscosities at that temperature and in that cup exceeds 10 seconds, and at 40°C for materials whose viscosities at 25°C exceeds 75 seconds. The 4 mm cup at a temperature of 25°C is used for cutbacks whose viscosities are less than 10 seconds in the 10 mm cup at 25°C.

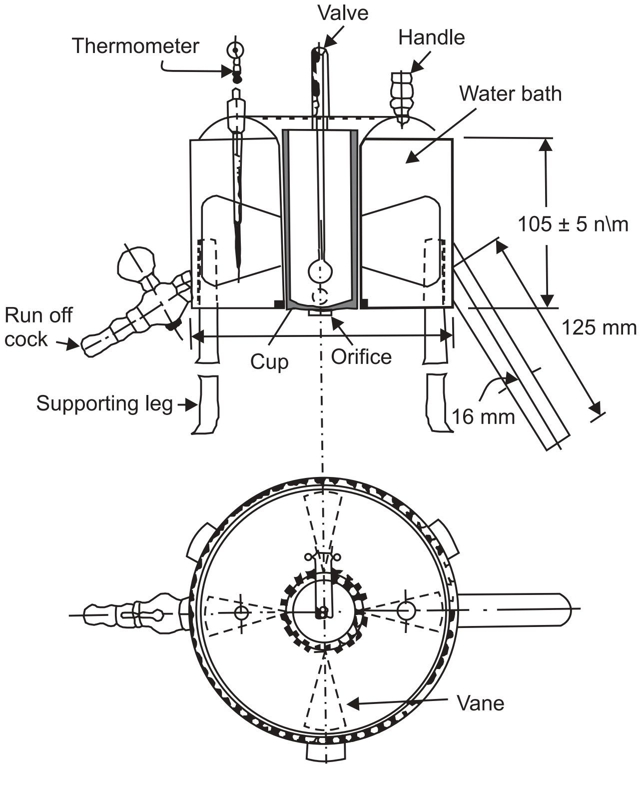

**Fig. 18.4 Tar Viscometer**

The tar cup is leveled with the help of a bubble level. The cup is immersed in the water bath cup to little above the peg mark. The water is heated to the test temperature specified and is maintained throughout the test. The binder is heated to 20°C above the test temperature and allowed to cool. The tar is poured into the cup (when it is slightly above the test temperature). The receiver is cleaned and soft soap solution (1 per cent soap by weight) up to 20 ml mark is poured. The receiver is placed under the orifice. When the binder reaches the test temperature the valve is opened. The stop watch is started when the receiver records 25 ml and is stopped when the receiver records 75 ml. The time elapsed is recorded in seconds. The observations are repeated 3 times and the mean of three values is taken as the viscosity of the given binder.

*Significance* Viscosity measurements are useful not only ensuring that material with the desired properties has been obtained, but also as a means of selecting binders for specific uses. If a binder with too low viscosity is premixed with an aggregate, it may flow off the aggregate while en route from the mixing plant. Conversely, if the viscosity is too high, the mixture may be unworkable by the time it reaches the site. If too low viscosity is used for surface dressing purposes, the result may be bleeding or loss of chipping under the traffic. With low viscosity binders, application temperatures can be kept lower and aggregates are more easily coated. The test results are very useful in classifying the grade of tars and cut-backs.

## Heat Tests

The complete tests comprise flash and fire point test, loss on heat test, distillation test and water content test.

***Flash and Fire Point Test*** Flash point is the lowest temperature at which the vapour of a substance can be ignited in air by a flame under specified conditions of test. The substance itself does not continue to burn. The sample is filled in an open metal cup suspended in air as shown in Fig. 18.5. It is heated at a uniform rate and an open flame is passed over its surface to determine the temperature at which the volatile vapours are given off and catch fire. The significance of the test is that in practice the bitumen should be heated 10°C below the flash point from safety point of view.

Fire point is the lowest temperature at which the material gets ignited and burns under specified conditions. The name of the test is Pensky-Marten test (Fig. 18.6).

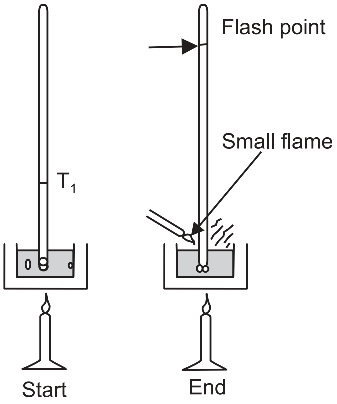

**Fig. 18.5 Flash point test**

***Loss on Heat Test*** The significance of the test is that the bitumen should contain just sufficient oil to impart consistency necessary for processing and blending. Also the loss of weight in the test is an indication of the hardening that bitumen undergoes when heated.

A bituminous sample of 50 g is headted for 5 hours in a flat-bottom cylindrical container. It should not undergo more than 1 per cent loss in weight.

***Distillation Test*** In this test the quantities of the various volatile oils added to bitumens fluxing or for cutting-back are determined. The residue left behind in the test indicates the actual bitumen quantity.

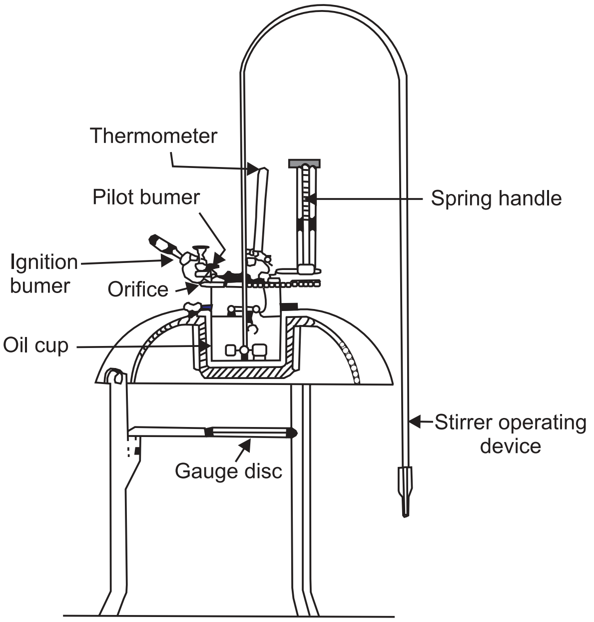

**Fig. 18.6 Pensky-Marten test**

***Water Content Test*** Foaming occurs when water is in excess of the specified amount. In this test water-free petroleum distillate is added to the sample and heated. Then the distillate is condensed and the quantity of water collected at the bottom is expressed as percentage by weight of the sample. It should not exceed 1 per cent.

### Solubility Test

This test indicates the purity of bituminous binders by finding the quantity of bitumen in binder. Insoluble impurities like free carbon, mineral salts, dusts, etc. are found by this test. The sample consists of 2 to 5 g of bitumen in 100 g of carbon-disulphide or carbon tetrachloride.

### Sulphonation Index Test

This test is performed to find the presence of paraffin, naphthalene, benzene, etc. which produce greasy effect and fail to hold the aggregate. Moreover, binder does not set in the presence of these impurities.

The tar sample is treated with sulphuric acid and the volume of unsulphonated residue is expressed in millimeter per 100 g to tar. The number denotes the index value of the sample.

### Ductility Test

All bituminous materials must have some specified ductility so that when placed in the pavement, they will distort rather than crack. The test consists of stretching the bitumen binder (in the form of a standard briquette shown in Fig. 18.7) at a standard temperature of 27°C and at a standard rate of 5 cm per minute till the thread breaks. The ductility is expressed as the distance stretched in centimeters.

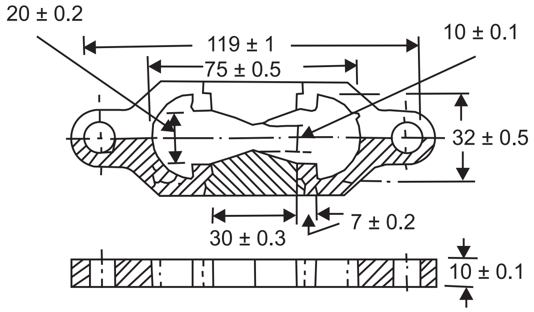

**Fig. 18.7 Briquette Mould**

***Procedure:*** The binder is heated slowly to a pouring consistency between 75°C to 100°C above the approximate softening point. The mould is placed on a brass plate and coated with a mixture of equal parts of glycerin and dextrine. The fluid bitumen is poured into the mould more than level full and is allowed to cool. The whole assembly is placed for 30 minutes in a water bath maintained at 27°C. The moulds are taken out and the excess bitumen removed by means of a hot sharp knife. The assembly is placed again in bath and kept their for 85 to 95 minutes at 27°C. The sides of the mould are removed and the clips are hooked on to the ductility machine. The pointer is set to read zero. Load is applied and the reading on the scale recorded when the bitumen thread just breaks (Fig. 18.8).

The average distance (of two normal tests) in centimeters through which the pointer has travelled to produce rupture is reported. In a normal test the material between two clips pulls to a thread and rupture occurs where the cross section is minimum. The water cover, both below and above the specimen, must remain at least 10 mm throughout the test.

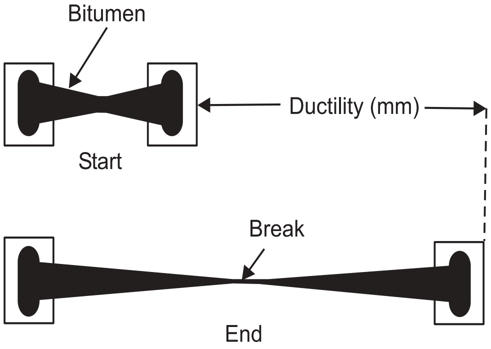

**Fig. 18.8 Ductility Test Setup**

***Significance*** This test indicates the cohesive property of the bitumen and its ability to form a thin, continuous film around the aggregate. It is also an indication of the binding strength and ability to withstand shocks. In the flexible pavement construction bitumen binders should form thin ductile film around the aggregate. The binder material which does not possess sufficient ductility would crack resulting in damping effect.

The ductility values of bitumen vary from 5 to over 100 cm. Often minimum value of 50 cm is specified for bituminous pavement construction.

## Specific Gravity Test

Specific gravity is defined as the ratio of the mass of a given volume of the substance to the mass of an equal volume of water at 27° ± 0.1°C. It can be determined by Pycnometer method or Balance method.

***Procedure*** In the Pycnometer method the specific gravity bottle is cleaned, dried and weighed along with the stopper. It is then filled with fresh distilled water and kept in water container for half an hour at temperature 27° ± 0.1°C. The bottle is removed and cleaned from outside. The bottle containing distilled water is now weighed. The bitumen is heated to a pouring temperature and is poured in the empty bottle. The material is filled up to half and inclusion of air is prevented. To permit an escape of air bubbles, the sample bottle is allowed to stand for half an hour at a suitable temperature, then cooled to 27°C before weighing.

In the Balance method the test specimen is 12 mm cube prepared by pouring the liquefied sample in brass mould. The sample is weighed in air and is then weighed in distilled water, maintained at 27° ± 0.1°C, to the nearest 0.1mg.

The specific gravity of the bitumen material is calculated as follows

### *Pyncnometer Method*

$$\text{Specific gravity} = \frac{(c - a)}{(b - a) - (d - c)}$$

where a = weight of specific gravity bottle
b = weight of the specific gravity bottle filled with distilled water
c = weight of the specific gravity bottle about half filled with material
d = weight of the specific gravity bottle about half filled with the material and the rest distilled water

### *Balance Method*

$$\text{Specifice gravity} = \frac{a}{a - b}$$

where a = weight of the dry specimen
b = weight of the specimen immersed in distilled water

*Significance* Density of bitumen is a fundamental property frequently used in classifying the binders for use in paving jobs. In most applications, the bitumen is weighed, but finally in use with aggregate system, the bitumen content is converted on volume basis. Thus an accurate specific gravity value is required for conversion of weight to volume.

### Adhesion Test

It is also known as *aggregate bitumen affinity* test. From the point of view of behaviour of aggregate towards bituminous binders, aggregate are classified into hydrophilic (which lose bituminous coating in the presence of water) and hydrophobic (which retain its bituminous coating). A number of tests have been developed to test the affinity of aggregate towards bituminous binder. The static immersion test is the simplest. The principle is immersing aggregates coated with binder in water, and estimating the degree of stripping, *i.e.*, the ratio of the uncovered area observed visually to the total area of aggregate expressed as a percentage.

*Procedure* 200 g of dry and clean aggregate passing 20 mm sieve are heated and retained on 12.5 mm sieve up to 150°C when the binder is bitumen and up to 100°C in case of tar. Then the binder, 5 per cent by weight, is heated up to 10°C more than the aggregate separately. The heated aggregate and binder are mixed thoroughly. The mixture is transferred to a 500 ml beaker and cooled at room temperature for about two hours. The coated aggregate are immersed in distilled water to cover the beaker and then kept in a water bath maintained at 40°C, taking care that level of water in bath is at least half the height of the beaker. The beaker is taken out from the water bath after 24 hours and cooled at room temperature. The percentage of stripping is estimated visually keeping the specimen still under water. The average of the three results (rounded of to nearest whole number) is reported as stripping value of the tested aggregate.

*Significance* Besides selecting road aggregates of suitable physical strength and exercising normal quality control, it is necessary to foresee the adhesion behaviour of aggregate with bitumen as otherwise road is likely to fail due to disintegration of road components under stresses of traffic. Prior knowledge of the adhesion behaviour of available road metal with bitumen helps the civil engineer to decide on the suitability of available road metal for bituminous construction. The stripping value for aggregate in bituminous constructions should not be more than 25 per cent.

## 18.9 APPLICATIONS OF BITUMINOUS MATERIALS

Bitumen and tar binders find application for preparing asphaltum concretes, for manufacturing roof waterproofing and steam proofing materials and items, roof-waterproofing pastes, and for making roof coverings and waterproofing and road construction mastics and emulsions.

*Bitumen emulsions* (bitumen 5%, emulsifier content 0.01 to 5%) are used for making water and steam-proof coatings, priming surfaces in preparation for waterproofing glueing piece and coil materials and making the surfaces of items hydrophobic. Bitumen pastes are prepared from bitumen, water and emulsifiers. The latter are non-orgamic finely dispersed mineral powder, containig active colloidal particles smaller than 0.005 mm, which are added to water to produce pastes. Common emulsifiers are lime, clay and ground tripoli. Bitumen paste is employed to protect water-and steam-proofing coatings, to prime surfaces before they are insulated, to fill roof joints and to prepare cold mastics, in which it plays the part of a binder.

*Mastics* are used for roofing and waterproofing. Bituminous wall and sheet materials for roofing and waterproofing are widely employed in building practice. These are generally of the following two types: ones prepared by impregnating special card board with petroleum bitumens or tar compounds and subsequently coating it with a compound of higher melting temperature and a granular material (gravel or sand); ones fabricated by calendering thermally and mechanically processed mixtures of binders and additives into sheets of prescribed thichkness

*Impregnated roll materials* are subclassified by the kind of binder into bitumen, tar, tar-bitumen, petroleum asphalt and bitumen-polymer varieties. By structure, impregnated roll materials are subdivided into coated and non-coated types. Coated impregnated cardborad roll materials include roofing felt, tar paper, tar-bitumen and petroleum asphalt materials.

*Roofing felt* is a roll material prepared by impregnating roof cardboard with soft bitumen, subsequently coating it on one or both sides with high-melting bitumen and finally facing it with finally-ground mineral powder, mica or coloured mineral granules. Roll roofing fibreglass cloth and felt are manufacrtured by combining fibreglass backing with bitumen, rubber-bitumen or bitumen-polymer films and coating them on one or both sides with a granular material. Fibreglass cloth and felt are laid on hot-or cold-process mastics and used in multi-layer flat roofs, and as a glued-on water-and steam-proofing material.

*Asphalt reinforced mats* are manufactured by coating impregnated fibreglass cloth on bothe sides with bitumen or waterproofing asphlat mastic. By the impregnating material and composition of the covering layer-asphalt reinforced mats are subdivided into common and high heat-resistant grades. Reinforced mats are manufactured 3.0–10.0 m long, up to 1 m wide and 4–6 mm thick. These are used for glued-on waterproofing jobs and for sealing expansion joints.

Some of the other applications of bitumen and asphalt are in the manufacture of piece waterproofing items such as waterproofing asphalt slabs, waterproofing stone and prefabricated concrete items.

*Waterproofing asphalt slabs* are manufactured by covering preimpregnated fibreglass or metal mesh by a hot-process waterproofing mastic or sand asphalt concrete mastic or by press moulding hot-process waterproofing asphalt mastic or sand asphalt concrete mixture. Slabs are either reinforced or non-reinforced. Non-reinforced slabs are made 80–100 cm long, 50–60 cm wide and 1–2 cm thick, where as reinforced slabs are 100–120 cm long, 75–120 cm wide and 2–4 cm thick. These are used for glued-on waterproofing work and filling of deformation joint. They may be employed during the cold season.

*Waterproofing stones* are manufactured by imprgnating artifical or natural porous materials (brick, concrete, tuff, opoka, chalk, limestone etc.) with bitumen or coal tar products to a depth of 10–15 mm. They are employed for making waterproof brickwork and lining with the use of cement and asphalt mortars.

*Prefabricated waterproofing reinforced concrete items* are manufactured by impregnating prefabricated reinforced concrete elements (piles, slabs, sections of pipes, tubings, etc.) with organic binders to a depth of 10–15 mm. These items are used for anticorrosion waterproofing of instalations exposed to simultaneous action of impact loads and mineralized water.

## EXERCISES

1. (a) Define bitumen, asphalt and tar and how do they differ?
   (b) What are the various types of bitumen and what are their uses?
   (c) What is meant by flash point and fire point of bitumen?
2. Describe briefly the classification of tar and the specifications of bitumen as a building material.
3. (a) Describe Penskey-Marten's test of bitumen
   (b) What are the properties of bitumen and asphalt?
   (c) What do you understand by the following terms:
   Cut-back bitumen, Straight-run bitumen, Blown bitumen
4. (a) Describe briefly the classification of bitumen
   (b) How bitumen is tested for ductility?
   (c) Give the comparison of tar and asphalt in a tabular form
5. Describe the tests for
   (a) Penetration (b) Flash point and fire point
   (c) Ductility (d) Softening point
6. Write short notes on:
   (a) Rock asphalt (b) Cut-back asphalt
   (c) Bituminous felt (d) Coal tar
   (d) Tar-macadam (f) Coal tar pitch
7. Discuss the significance of following tests:
   (a) Stripping value test (b) Ductility tests
   (c) Ring and ball test (d) Viscosity test
8. Discuss the general properties of bituminous materials.

## OBJECTIVE TYPE QUESTIONS

1. Defects such as blisters and cracks in bitumen may be caused by natural agencies such as
   1. water 2. air 3. light
   of the above, the correct agency(ies) is/are
   (a) 1 and 2 (b) 1 alone
   (c) 1 and 3 (d) 1, 2 and 3

2. Petroleum bitumen is obtained from
   (a) fractional distillation
   (b) extraction
   (c) atmospheric-vaccum distillation
   (d) destructive distillation
3. The grade of wood tar used for grouting purposes is
   (a) RT-1 (b) RT-2 (c) RT-4 (d) RT-5
4. Coal tar pitch is classified on the basis of
   (a) viscosity (b) softening point
   (c) sp.gr (d) ductility
5. Ring and ball apparatus is used for which of the following test of bitumen?
   (a) Penetration (b) Viscosity
   (c) Softening point (d) Ductility
6. The Pensky-Marten test is used for testing
   (a) fire point (b) ductility
   (c) viscosity of bitumen (d) penetration
7. Bureau of Indian Standards classifies bitumen into grades such as 65/25, 85/40 etc. The first and second numbers respectively refer to
   (a) softening point and penetration
   (b) penetration and softening point
   (c) flash point and penetration
   (d) flash point and softening point
8. The stripping value of aggregate in bituminous costruction should not be more than
   (a) 10% (b) 15% (c) 20% (d) 25%

## Answer Table

1. (d) 2. (c) 3. (d) 4. (b) 5. (c) 6. (a) 7. (a) 8. (d)

# 19

# Gypsum

## 19.1 INTRODUCTION

Gypsum is a non-hydraulic binder occurring naturally as a soft crystalline rock or sand. Pure gypsum is a white translucent crystalline mineral and is so soft that it can be scratched by a finger nail. When heated to 205°C, pure gypsum loses its luster and its specific gravity is increased from 2.3 to 2.95 due to the loss of water of crystallization. Gypsum has a unique property of moulding. When heated it gives up combined water and easily turns into powder. On adding water to the powder it can easily be shaped and moulded, and in a short time it hardens again and becomes similar to what it was in its natural state. When water is added the gypsum forms interlocking crystals. As the gypsum hardens it is this crystallisation that makes it such an effective fire resisting material.

There are two commercial varieties of crude gypsum, rock gypsum and gypsum or gypsite used for the manufacture of gypsum binding material. These substances consist principally of a hydrous sulphate of lime ($CaSO_4 + 2H_2O$) with varying percentages of silica, carbonate of lime, carbonate of magnesia, and iron oxide. Building gypsum is an air-setting binder composed mainly of semihydrate gypsum and obtained by processing gypsum at temperatures 150°C–160°C.

Gypsum items have a number of valuable properties like relatively small bulk density, incombustibility, good sound absorbing capacity, good fire resistance, rapid drying and hardening with negligible shrinkage, superior surface finish, resistance to insects and rodents and low energy input during burning to produce gypsum plaster. The major shortcomings are its poor strength in wet state and high creep under load. Gypsum plaster, *e.g.,* Plaster of Paris, wall plaster stucco, and hard finish plaster are extensively used in wall construction. Flooring plaster, made by calcining gypsum at a high temperature has been considerably used. In all of these powders, gypsum in a more or less dehydrated state is the essential element. Gypsum-based items should be used only in dry state and in premises of not more than 60 per cent relative air humidity.

## 19.2 EFFECT OF HEAT AND MOISTURE

The water of crystallization in the gypsum ($CaSO_4 \cdot 2H_2O$) is not held firmly by the mineral. Therefore, when it is heated to about 160°C it loses a part of water of crystallization and is known as *half-hydrate gypsum*.

$$\underset{\text{Gypsum}}{2CaSO_4 \cdot 2H_2O} \xrightarrow{160°C} \underset{\text{Plaster of paris}}{2CaSo_4 \cdot \frac{1}{2}H_2O} + 3H_2O$$

At still higher temperatures (About 200°C), gypsum loses all its water of crystallization and turns out into an hydrate gypsum.

$$CaSO_4 \cdot 2H_2O \xrightarrow{200°C} CaSO_4$$

The lost water of crystallization can be regained under favourable damp or moist conditions.

$$2CaSO_4 \cdot \frac{1}{2}H_2O + 2H_2O \xrightarrow{\text{Hydration}} 2CaSO_4 \cdot 2H_2O$$

$$CaSO_4 + 2H_2O \longrightarrow CaSO_4 \cdot 2H_2O$$

## 19.3 SETTING AND HARDENING

The setting and strengthening of gypsum are due to intergrowth of very fine and poorly soluble crystals of dehydrated gypsum as they precipitate from a solution which remains oversaturated as long as the hydration of gypsum proceeds. Following are the two theories of setting of gypsum.

According to the crystallization theory proposed by Le-chatelier when water is added to gypsum, the latter dissolves forming a saturated solution of dehydrate gypsum. Since the solubility of semihydrate gypsum is about 3.5 times more than of dehydrated gypsum, the soloution that is saturated with respect to the semihydrate gypsum causes dehydrated gypsum to crystallize. In this process the concentration of semihydrate gypsum is reduced causing more of it to dissolve until again the solution is oversaturated and consequently again yielding crystals of dehydrate gypsum. The process continues until all the semihydrate gypsum is hydrated and crystallized.

According to colloidal theory when water is added to gypsum, the semihydrate gypsum goes into solution until the latter is saturated. In an oversaturated solution, the interaction of water with the solid semihydrate continues on their surface due to high mutual chemical affinity. The resultant dehydrated gypsum fails to dissolve further and precipitates as an unstable disperse colloid mass in the form of gel, the process being accompanied by the setting of the mass. The resultant crystals grow both in number and size, while orienting randomly and interwining, convert the jelly like mass into a crystalline growth. The resultant $CaSO_4 \cdot 2H_2O$ crystals grow into a single crystalline concretion which on drying becomes very strong.

Gypsum sets within 20 minutes and it is difficult to use it for some purpose. Suitable setting retarders like lime-kerat in glue and sulphite -alcohol vinasse may be used.

## 19.4 CLASSIFICATION

Gypsum binders are classified as low and high burning varieties. The low burning variety is manufactured by heating dehydrated gypsum to a temperature of about 160°C. The examples of low burning variety are building and extra strong gypsums. The high burning (anhydrite) variety is obtained by burning dehydrated gypsum at 700°C–1000°C, when the chemically bound water is lost totally. Gypsum may also be classified as low strength gypsum—obtained by heating natural gypsum rock at normal pressure, the resultant gypsum ($\beta$ modification) is very hygroscopic (60–65%) and porous (40%), and extra strong gypsum—obtained by heating gypsum at pressure of 2–3 atm followed by drying at 160°C–180°C ($\alpha$ modification). The extra strong gypsum is used in metallurgical industries for manufacture of moulds.

## 19.5 MANUFACTURE

### Low Burning Variety

A 75 per cent dehydrated gypsum is referred to as Plaster of Paris. The pulverized Plaster of Paris is the basic material used to make many of the gypsum building materials. For refined grade of Plaster of Paris the oven, kettle and rotary processes are used. Hard finish plaster is made in kilns similar to that used in calcining lime.

The excavated raw materials are crushed, and if the kettle process is used, ground until about 60 per cent pass No. 100 sieve. In the rotary process the final pulverization is omitted until calcination is completed.

The kettles employed for calcinations are 2.5 or 3 m in diameter and about 2 m high. The pulverized material is chuted into the kettle and temperature raised gradually so as to drive off the mechanically held water. At about 100°C the whole mass bubbles up violently and then sinks. At 150°C the combined water begins to boil out and between 170° and 200°C the process is stopped. The kettle process requires about 2 to 3 hours to calcine a charge yielding 5 to 6 tonnes. The calcined product is then cooled partially in a vat and is sent to the screens. Residues from the screen are ground; the fines are stored in bins.

In the rotary process the raw material is crushed to pass through 25 mm mesh and is then fed into a rotating cylinder inclined to the horizontal. Calcination is accomplished with the introduction of hot furnace gases. The roasted material is conveyed to calcining vats in which further changes are bought by the heat within the material. The product is then ground screened and stored.

In case of Plaster of Paris or stucco the time of setting is delayed by adding fraction of one per cent of retardant like glue, saw dust or blood after the plaster has cooled to increase the handling time. Cattle hair or wood fibre is introduced for cohesiveness of plastics. Wall plasters made from pure raw materials are adulterated with 15–20% of hydrated lime, the addition is not required for the raw materials containing considerable amount of clay. If instead of using moderate heating the gypsum is heated sufficiently to drive off all the water, the product no longer combines readily with water to form a useful plastering material. If small quantity of accelerating salts is added to it, a useful range of materials is again formed.These are known as anhydrous gypsum plasters or hard burnt plasters.

### High Burning Variety

Anyhydrite cement is obtained by burning natural dihydrate gypsum at a temperature of about 700°C and then grinding the product together with hardening catalyzers (lime, mixture of sodium sulphate with green or blue vitriol, burned dolomite, granulated basic blast-furnace slag, etc).

A typical anhydrite binder may be of the following composition: lime, 2–5%; a mixture of sodium bisulphate or sulphate with green or blue vitriol in amounts of 0.5 to 1% each; dolomite burned at 800–900°C, 3–8%; granulated basic blast-furnace slag, 10–15%. Green and blue vitriols consolidate the surface of hardened anhydrite cement, so that the catalyzers do not seep out and discolour the item's surface. The action of the catalyzers is due to the ability of anhydrite to form complex compounds with various salts in the form of an unstable multiple hydrate, which then decomposes yielding $CaSO_4 \cdot 2H_2O$. Anhydrite cement can also be obtained by grinding natural anhydrite with the above additives.

Anhydrite cement is a slowly setting binder; its setting starts not earlier than in 30 min and ends not later than in 24 hours. It is used for preparing brick-laying and plastering mortars, concretes, heat insulating materials, artificial marble and other ornamental items.

A variety of anhydrite cements is the high-burned gypsum (estrich gypsum). It is manufactured by burning natural gypsum or anhydrite at a temperature between 800 to 1000°C followed by fine grinding. This results not only in complete dehydration but also in partial decomposition of anhydrite with the formation of CaO(3–5%) according to the reaction $CaSO_4 = CaO + SO_3$. When estrich-gypsum is mixed with water, CaO acts as a catalyzer which promotes the hardening of the anhydrite cement in a manner discussed above.

High-burned gypsum is used to prepare brick-laying and plastering mortars, to build mosaic floors, to manufacture artificial marble, etc. Items from high-burned gypsum have low heat and sound conductivity, higher frost and water resistance and a smaller tendency to plastic deformation than products from building gypsum.

## 19.6 PLASTER OF PARIS OR STUCCO

It is produced by incompletely dehydrating pure finely ground gypsum at a temperature some what lower than 185°C. Most plasters theoretically approach — $CaSO_4 + \frac{1}{2} H_2O$ — which contains about 6.2 per cent of water.

The setting of plaster of paris is attributed to the formation of gypsum crystals from a supersaturated aqueous solution. When substances of colloidal nature (for example glue) are mixed with the plaster the formation of crystals is hindered and the time of set retarded. In hardening, Plaster of Paris first shrinks then expands. The latter property makes the material suitable for making casts, since a sharp impression of the mould can be secured. For the same reason it forms an excellent material for filling cracks, holes in the plastered surfaces and also on the wooden surfaces before painting/polishing.

Owing to the rapidity of set and difficulty in working, its use in structures is limited to ornamental works. Being unstable in water it should be used for indoor works only.

### *Properties*

1. White in colour
2. Setting time is 5 to 10 minutes
3. Specific gravity is 2.57.

## 19.7 GYPSUM WALL PLASTERS

Gypsum wall plasters gain one-half of their one-month strength in a day. Plaster and sand mortars of 1:1 proportions may be expected to develop 80 per cent of the neat strength at corresponding ages, while those of 1:2 proportion generally possess one-half to two-third of the neat strength.

The gypsum to sand neat plaster in proportion of 1:3 should set in 2 to 32 hours and in 1.5 to 8 hours when mixed with wood fibres. The dry set density of gypsum wall plaster is 850–1040 kg/m$^3$, and compressive strength of 1:2 gypsum wall plaster is 6 to 15 N/mm$^2$.

Gypsum wall plasters are divided into following four categories.

*Gypsum Neat Plaster* is 60.5 per cent or more of calcined gypsum (plaster of paris) with material added to control workability, time of set and cohesiveness.

*Gypsum Wood Fibre Plaster* is 60.5 per cent or more of calcined gypsum and, wood fibre 1.0 per cent or more to increase cohesiveness, and the remaining material to control workability and time of set.

*Calcined Gypsum* is used for finishing coat. It may or may not carry a retardent. Calcined gypsum may be white or grey.

*Gypsum Ready Sanded Plaster* consists of cementing material, predominantly calcined gypsum, which has been mixed at the mill with the proper proportions of sand and other desirable constituents. It is prepared for use simply by adding water. There are two grades of Gypsum Ready Sanded Plaster, the *scratch* or first coat, and the *browning* or second coat.

The scratch coat contains 2 sand to 1 cementing material by weight. The browning coat contains 3 sand to 1 cementing material by weight. The cementing material carries at least 60.5 per cent by weight of calcined gypsum and other ingredients to control set and workability. Some of the properties of gypsum plasters are given in Table 19.1

**Table 19.1 Properties of Gypsum Plasters**

| *Setting time (minutes)* | | *Type* | *SO$_3$* | *CaO* | *Magnesium* | *Sodium* |
|---|---|---|---|---|---|---|
| *Neat* | *Sand mixed* | | *%* | *%* | *salts (%)* | *salts (%)* |
| 20–40 | 120–900 | i) Plaster of Paris | 35 | 23.5 | 0.3 | 0.3 |
| 60–180 | 120–900 | ii) Retarded semihydrated gypsum plaster | 35 | 23.5 | 0.3 | 0.3 |
| | | *Type I undercoat:*<br>Browning plaster, and<br>Metal lathing plaster<br>*Type II final coat*<br>Finish plaster, and<br>Board finish plaster | | | | |
| 20–360 | | iii) Anhydrous gypsum plaster (for finishing only) | 40 | 27 | 0.3 | 0.3 |
| 20–360 | | iv) Keene's plaster (for finishing only) | 47 | 31.5 | 0.3 | 0.3 |

## 19.8 HARD FINISH PLASTER

When gypsum is burnt at considerably high temperature than that for calcining of cement plaster, and treated with certain solutions like alum and Glauber's salt ($Na_2SO_4$), the plasters so produced show slow setting but ultimately become very hard. Such plasters may be polished to form a smooth surface and make a very satisfactory finish for interior walls. Often walls of these plasters are marked to imitate tiling with pleasing effects.Two commercial hard finish plaster cements are available.

***Keene's Cement*** is made by burning a very pure rock gypsum at a red heat (700°C), cooling, and then adding 1.0 per cent of potassium and aluminium sulphates to accelerate the set. Subsequently the material is ground so that 90 per cent or more passes No. 100 sieve. It is pure $CaSO_4$ of pure white colour. Keene's cement is not injured by storage and mortars of it may be retempered. Set occurs between 20 minutes to 6 hours. At 7 days the tensile strength is 3.16 $N/mm^2$. It is used as a finish plaster only where a greater resistance to moisture and surface abrasion is required.

***Mack's Cement*** is made by burning gypsum at a very high temperature and adding about 0.4 per cent of burnt Glauber's salt or potassium sulphate. It is said to form unusually hard, dense and durable surface which will take paint very well.

## 19.9 GYPSUM PLASTER BOARDS

It is a gypsum product of recent origin made of thin layers of card board or wood cemented together with wall plaster, used for lining walls and ceiling of buildings. The boards may be strengthened by incorporating fibres as fibrous gypsum plaster boards. Sissal or coconut fibres are generally used. The weight of plaster in the later variety is 10 $kg/m^2$ of board and that of fibre is 250 $g/m^2$ of board. They are very light weight and have high fire resisting properties. Gypsum plaster boards can be sawn to desired size and shape. They are available in widths 400, 600, 800, 900, 1200 mm; in length 1200, 1500, 1800, to 3600 mm in steps of 100 mm and; in thickness 9.5 to 15 mm. They are classified as

| | |
|---|---|
| *Gypsum wall boards* | It has a face to which decoration may be applied. |
| *Gypsum wall board with reduced water absorption rate* | These boards have additives in the core and/or the paper liners to reduce water absorpation rate. |
| *Gypsum wall boards with improved core cohesion at high temperature* | These boards have mineral fibres and/or other additives in the gypsum core to improve core cohesion at high temperature. These have a face suitable for direct direction. |
| *Gypsum plaster base board* | These boards have a face suitable to receive gypsum plaster and may be perforated during primary manufacturing. |
| *Gypsum plaster base board with improved cohesion at high temperature* | It is a combination of the above two. |
| *Fire resistant gypsum wall boards* | These boards have cores containing special mineral materials. |

The breaking load of the boards are given in Table 19.2.

**Table 19.2 Breaking Load of Gypsum Plaster Boards**

| *Type* | *Thickness (mm)* | *Transverse (N)* | *Longitudinal (N)* |
|---|---|---|---|
| Plaster board | 9.5 | 140 | 360 |
| | 12.5 | 180 | 500 |
| | 15 | 220 | 650 |
| Base board | 9.5 | 125 | 180 |
| | 12.5 | 165 | 235 |

***Note:*** For fibrous boards the deflection should not exceed 19 mm when subjected to a proof load of 340 N.

## 19.10 NON-LOAD BEARING GYPSUM PARTITION BLOCKS

These can be solid or hollow, rectangular with straight and square edges and true surfaces. The compressive strength of these partition blocks should not be less than 50 N/m$^2$ on gross area. These boards are available in sizes as given in Table 19.3.

**Table 19.3 Dimensions of Gypsum Partition Blocks**

| *Length (mm)* | *Height(mm)* | *Breadth (mm)* | *Hollow blocks* | |
|---|---|---|---|---|
| | | | *Circular holes (mm)* | *Elliptical or rectangular holes (mm)* |
| 700 maximum in step of 100 mm | 300 maximum | 75 | 15 | 20 |
| | | 100 | 20 | 20 |
| | | 125 | 25 | 30 |
| | | 150 | 15 | 20 |

## 19.11 PYROCELL

It is finely ground powder containing an admixture, forms a gas on being mixed with water and expands the mixture to 3 or 4 times its volume. This inflated paste hardens into a light, cellular, fire resistant mass possessing good acoustical and insulating properties.

## EXERCISES

1. (a) What is gypsum?
   (b) How is gypsum classified?
   (c) What is Keene's cement?
2. (a) What is Plaster of Paris?What are its uses?
   (b) What are the various types of gypsum wall plasters?
   (c) Briefly describe the effect of heat and moisture on gypsum.
3. Write notes on:
   (a) Stucco (b) Hard finish plaster (c) Pyrocell

4. (a) Describe setting and hardening of gypsum.
   (b) Give the salient features of keene's and Mack's cements.
   (c) How is Plaster of Paris manufactured?

## OBJECTIVE TYPE QUESTIONS

1. Consider the following statements regarding pure gypsum.
   1. It is translucent crystalline mineral
   2. It can be scratched by a finger nail
   3. When heated up to about 200°C its sp.gr increases from 2.3 to 2.95.

   Of the above the correct statements are:
   (a) 1 and 2 only
   (b) 1 and 3 only
   (c) 2 and 3 only
   (d) 1, 2 and 3
2. Gypsum has
   (a) high bulk density
   (b) negligible shrinkage
   (c) damp proofing property
   (d) low creep
3. Hardened gypsum
   (a) is fire resistant
   (b) can be used in places of high relative humidity
   (c) shrinks
   (d) has high bulk density
4. In metallurgical industries the moulds are manufactured from gypsum of variety having
   (a) $\alpha$-modification
   (b) $\beta$-modification
   (c) hygrosocopicity
   (d) porus structure
5. The setting time of Plaster of Paris is delayed by adding retardant
   (a) cattle hair
   (b) clay
   (c) hydrated time
   (d) glue
6. Gypsum loses all its water of crystallization at about
   (a) 50°
   (b) 100°C
   (c) 200°C
   (d) 300°C
7. Plaster of Paris $CaSO_4.\frac{1}{2}H_2O$ contains about
   (a) 3% of water
   (b) 6% of water
   (c) 8% of water
   (d) 11% of water
8. Keene's Cement is made from
   (a) lime
   (b) slag
   (c) gypsum
   (d) puzzalana

### Answer Table

1. (d) 2. (b) 3. (a) 4. (a) 5. (d) 6. (c) 7. (b) 8. (c)

# 20

# Special Cements and Cement Concretes

## 20.1 INTRODUCTION

The conventional cements and cement concretes described in Chapters 5 and 10 are commonly used for structures in normal environmental conditions. With the advancement of technology and pressing demands of better mechanical properties and durability than the conventional ones as well as improvements in selected properties of interest has lead to the development of special cements and cement concretes.

## 20.2 ACID-RESISTANT CEMENTS

Acid-resistant cements consist of an aqueous solution of sodium silicate (soluble glass), an acid-resistant aggregate and an additive (hardening accelerant). The micro aggregates are quartz, quartzites, andesite, diabase and other acid-resistant materials; the hardening accelerant is sodium fluosilicate. The binding material in the acid-resistant cement is soluble glass—a water solution of sodium silicate $Na_2O.nSiO_2$ or potassium silicate $K_2O.nSiO_2$. Here $n$ is the ratio of the number of silica molecules to that of alkali oxide molecules, called the glass modulus, whose value lies between 2.5 to 3.5.

Soluble glass is melted from quartz sand, ground and thoroughly mixed with soda ash, sodium sulphate or potassium carbonate in glass tanks at a temperature between 1300 and 1400°C. Melting takes from 7 to 10 hours. The resultant glass mass flows from the furnace into cars where it cools rapidly and breaks up into pieces called "silicate lumps". This glass is soluble in water under normal conditions, but when exposed to the action of high-pressure steam (5–6 atm at about 150°C), it fairly readily becomes liquid.

Soluble glass hardens in the air because atmospheric carbon dioxide causes amorphous silica $SiO_2.2H_2O[Si(OH)_4]$ to settle out and dry according to the reaction

$$Na_2SiO_3 + CO_2 + 2H_2O \rightarrow Si(OH)_4 + Na_2CO_3$$

But this process is very slow in the air. Hardening of soluble glass is accelerated by adding a catalyzer sodium fluosilicate ($Na_2SiF_6$) which interacts rapidly with soluble glass to produce a silicate gel.

$$Na_2SiF_6 + 2Na_2SiO_3 + 6H_2O \rightarrow 6NaF + 3\,Si\,(OH)_4$$

The introduction of sodium fluosilicate not only accelerates hardening, but also enhances the water and acid-resistant properties of cement.

The acid resistant cement should not be used in constructions subjected to the action of water, alkalis and phosphoric, hydrofluoric or fluosilicic acids for long periods of time. To enhance the water resisting property of cement, 0.5% of linseed oil or 2% of ceresit are added to it. The hydrophobic cement thus obtained is known as the acid and water-resistant cement.

***Uses*** Acid-resistant cements are used for lining chemical apparatus and for building towers, tanks and other installations for chemical industry. Soluble glass is also used for preparing acid-resistant and heat-resistant coatings.

## 20.3 EXPANDING CEMENTS

This group of binding material encompasses cements that show a slight increase in volume in the course of hardening under moist conditions, or that do not shrink when hardened in the air. Two kinds of expanding cements are available the water-impermeable and gypsum-aluminous varieties.

**Water Impermeable Expanding Cement** is a quick-setting and quick hardening hydraulic cementing material obtained by grinding or mixing finely ground aluminous cement, gypsum and high basicity calcium aluminate in a ball mill. Calcium aluminate of high basicity ($4CaO.Al_2O_3.12H_2O$) is obtained by hydrothermal curing over a period of 5 to 6 hours at a temperature between 120 to 150°C of a 1:1 mixture of aluminous cement and lime, mixed with 30% of water. The product is dried and ground. Setting begins not earlier than in 4 min and ends not later than in 10 min after water is added. Setting may be retarded by the addition of such ingredients as acetic acid and borax. Compressive strength of specimens from cement paste should not be lower than: in 6 hours, $7.5N/mm^2$ in 3 days, $30N/mm^2$; in 28 days, $50N/mm^2$. After one day of hardening, the specimens should be fully impermeable to water applied under pressure of 6 atm. Linear expansion after one day of hardening should not be less than 0.2 and not more than 1%.

***Uses*** Water impermeable expanding cement is used for repairing concrete and reinforced concrete constructions, for water-proofing tunnels and pit shafts, in underground and underwater constructions, for water-impermeable joints.

**Gypsum-Aluminous Expanding Cement** is a quick-hardening hydraulic binding material obtained by combined fine grinding or mixing of high-alumina slag and natural dihydrate gypsum (30%). Setting of gypsum-alumina cement begins not earlier than in 20 min and ends not later than in 4 hours after mixing with water. Specimens from gypsum-aluminous cement paste should be, after one day, impermeable to water applied at a pressure of 10 atm. Linear expansion of cement after one day of hardening should not be less than 0.15% and not more than 1.0%, its average value after 28 days being 0.1 to 0.3%.

***Uses*** Gypsum-aluminous cement is used for the manufacture of non-shrinking and expanding water-impermeable mortars and concretes, for caulking joints, for waterproofing underground mines.

## 20.4 OIL-WELL CEMENT

The oil well cement is used for the purpose of securing oil-well pipe casing with the surrounding earth and rocks. It is manufactured by grinding clinker consisting essentially of hydraulic calcium silicates. No material other than calcium sulphate be interground or blended during manufacture of cement. However, set modifying agents such as lentonite, barite and fly ash may be added in classes D, E and F types of oil well cement. The oil-well cement are classified as A, B, C, D, E, F, G, H and J-class depending upon its use at particular depth from ground level and the ground condition.

(a) *Class A* — intended for use from surface to 1830 m depth, when special properties are not required.
(b) *Class B* — intended for use from surface to 1830 m depth, when conditions require moderate to high sulphate resistant type of the cement.
(c) *Class C*— intended for use from surface to 1830 m depth, when conditions require ordinary to high sulphate resistant type of the cement and high early strength.
(d) Class D — intended for use from 1830 to 3050 m depth, when conditions require moderate to high sulphate resistant type of the cement under moderately high temperatures and pressures.
(e) Class E — intended for use from 3050 to 4270 m depth, when conditions require moderate to high sulphate resistant type of the cement under high temperatures and pressures.
(f) *Class F* — intended for use from 3050 to 4880 m depth, when conditions require moderate to high sulphate resistant type of the cement under extremely high temperatures and pressures.
(g) Class G — intended for use as a basic cement from surface to 2440 m, when conditions require moderate to high sulphate resistant type of the cement and can be used with accelerators and retarders to cover a wide range of well depths and temperatures. No additions other than calcium sulphate or water or both, shall be interground or blended with the clinker during manufacture.

(h) Class H — intended for use as a basic cement from surface to 2440 m, when conditions require moderate sulphate resistant type and can be used with accelerators and retarders to cover a wide range of well depths and temperatures. No additions other than calcium sulphate or water or both, shall be interground or blended with the clinker during manufacture.

(j) Class J— intended for use as manufactured from 3660 to 4880 m depth, when conditions require moderate to high sulphate resistant type under extremely high temperatures and pressures and can be used with accelerators and retarders to cover a wide range of well depths and temperatures. No additions other than calcium sulphate or water or both, shall be interground or blended with clinker during manufacture.

The chemical and physical requirements of oil-well cement are given in Tables 20.1 and 20.2, respectively.

**Table 20.1 Chemical Requirements for Oil-well Cement**

| *S. No.* | *Characteristic* | *Requirement* | | | | | | | |
|---|---|---|---|---|---|---|---|---|---|
| | | *Class A* | *Class B* | *Class C* | *Class D* | *Class E* | *Class F* | *Class G* | *Class H* |
| | | | | *Ordinary type* | | | | | |
| i) | Magnesium oxide (MgO), per cent, Max | 6.00 | — | 6.00 | — | — | — | — | — |
| ii) | Sulphur trioxide ($SO_2$), per cent, Max | 3.50 | — | 4.50 | — | — | — | — | — |
| iii) | Loss on ignition, per cent, Max | 3.00 | — | 3.00 | — | — | — | — | — |
| iv) | Insoluble residue, per cent, Max | 0.75 | — | 0.75 | — | — | — | — | — |
| v) | Tricalcium aluminate ($3CaO.Al_2O_3$), per cent, Max | — | — | 15.00 | — | — | — | — | — |
| | | | | *Moderate Sulphate Resistant Type* | | | | | |
| vi) | Magnesium oxide(MgO), per cent, Max | — | 6.00 | 6.00 | 6.00 | 6.00 | 6.00 | 6.00 | 6.00 |
| vii) | Sulphur trioxide ($SO_2$), per cent, Max | — | 3.00 | 3.50 | 3.00 | 3.00 | 3.00 | 3.00 | 3.00 |
| viii) | Loss on ignition, per cent, Max | — | 3.00 | 3.00 | 3.00 | 3.00 | 3.00 | 3.00 | 8.00 |
| ix) | Insoluble residue, per cent, Max | — | 0.75 | 0.75 | 0.75 | 0.75 | 0.75 | 0.75 | 0.75 |
| | Tricalcium silicate ($3CaO.SiO_2$), per cent: | | | | | | | | |
| | a) Max | — | — | — | — | — | — | 58.00 | 58.00 |
| | b) Min | — | — | — | — | — | — | 48.00 | 48.00 |
| xi) | Tricalcium aluminate | — | 8.00 | 8.00 | 8.00 | 8.00 | 8.00 | 8.00 | 8.00 |
| xii) | Total alkali content, expressed as sodium oxide ($Na_2O$) equivalent, per cent, Max | — | — | — | — | — | — | 0.75 | 0.75 |
| | | | | *High Sulphate Resistant Type* | | | | | |
| xiii) | Magnesium oxide (MgO), per cent, Max | — | 6.00 | 6.00 | 6.00 | 6.00 | 6.00 | 6.00 | 6.00 |

| | | | | | | | | | |
|---|---|---|---|---|---|---|---|---|---|
| xiv) | Sulphur trioxide ($SO_3$), per cent, Max | — | 3.00 | 3.50 | 3.00 | 3.00 | 3.00 | 3.00 | 3.00 |
| xv) | Loss on ignition, per cent, Max | — | 3.00 | 3.00 | 3.00 | 3.00 | 3.00 | 3.00 | 3.00 |
| xvi) | Insoluble residue, per cent, Max | — | 0.75 | 0.75 | 0.75 | 0.75 | 0.75 | 0.75 | 0.75 |
| xvii) | Tricalcium silicate ($3CaO.SiO_2$), per cent: | | | | | | | | |
| | a) Max | — | — | — | — | — | — | 65.00 | 65.00 |
| | b) Min | — | — | — | — | — | — | 48.00 | 48.00 |
| xviii) | Tricalcium aluminate ($3CaO.Al_2O_3$), per cent, Max | — | 3.00 | 3.00 | 3.00 | 3.00 | 3.00 | 3.00 | 3.00 |
| xix) | Tetracalcium aluminoferrite ($4CaO.Al_2O_3.Fe_2O_3$) plus twice the tricalcium aluminate ($3CaO.Al_2O_3$), per cent, Max | — | 24.00 | 24.00 | 24.00 | 24.00 | 24.00 | 24.00 | 24.00 |
| xx) | Total alkali content, expressed as sodium oxide ($Na_2O$) equivalent, per cent, Max | — | — | — | — | — | — | 0.75 | 0.75 |

***Notes:*** 1. When the tricalcium aluminate content (expressed as $C_3A$) of the class A cement is 8 per cent or less, maximum $SO_2$ content shall be 3 per cent.

2. When the ratio of the percentage of $Al_2O_3$ to the percentage of $Fe_2O_3$ is 0.64 or less, the $C_3A$ content is zero. When the $Al_2O_3$ to $Fe_2O_3$ ratio is greater than 0.64, the compounds shall be calculated as follows:

$C_3A = (2.65 \times \text{percentage of } Al_2O_3) - (1.69 \times \text{percentage of } Fe_2O_3)$

$C_4AF = 3.04 \times \text{percentage of } Fe_2O_3$

$C_3S = (4.07 \times \text{percentage of } CaO) - (7.60 \times \text{percentage of } SiO_2)$

$- (6.72 \times \text{percentage of } Al_2O_3) - (1.43 \times \text{percentage of } Fe_2O_3)$

$- (2.85 \times \text{percentage of } SO_3)$

When the ratio of $Al_2O_3$ to $Fe_2O_3$ is less than 0.64, an iron-alumina-calcium solid solution [expressed as ss:$C_4AF + C_2F$)] is formed and the compounds shall be calculated as follows:

$ss\ (C_4AF + C_2F) = (2.10 \times \text{percentage of } Al_2O_3) + (1.70 \times \text{percentage of } Fe_2O_3)$

$C_3S = (4.07 \times \text{percentage of } CaO) - (7.60 \times \text{percentage of } SiO_2)$

$- (4.48 \times \text{percentage of } Al_2O_3) - (2.86 \times \text{percentage of } Fe_2O_3)$

$- (2.85 \times \text{percentage of } SO_3)$

3. The total alkali content (expressed as $Na_2O$ equivalent) shall be calculated as follows:

$Na_2O \text{ equivalent} = (0.658 \times \text{percentage of } K_2O) + (\text{percentage of } Na_2O)$

**Table 20.2 Physical Requirements for Oil-well Cement**

| *Sl No.* | *Characteristic* | *Requirement* | | | | | | | | |
|---|---|---|---|---|---|---|---|---|---|---|
| | | *Class A* | *Class B* | *Class C* | *Class D* | *Class E* | *Class F* | *Class G* | *Class H* | *Class J* |
| I) | Water, per cent by mass of cement | 46 | 46 | 56 | 38 | 38 | 38 | 44 | 38 | see Note 1 |
| ii) | Fineness (Specific surface) by Blaine, $m^2/kg$, Min | 225 | 225 | 225 | — | — | — | — | — | — |
| iii) | Soundness (autoclave expansion), per cent, Max | 0.8 | 0.8 | 0.8 | 0.8 | 0.8 | 0.8 | 0.8 | 0.8 | — |

| | | | | | | | | | |
|---|---|---|---|---|---|---|---|---|---|
| iv) Free water content of slurry, per cent by volume, Max | — | — | — | — | — | — | 1.4 | 1.4 | — |
| v) Compressive strength, N/mm$^2$ Min: | — | — | — | — | — | — | — | — | — |
| (a) With 8-hour curing (see Note 2) | | | | | | | | | |
| 1) 38°C at atmospheric pressure | 1.7 | 1.4 | 2.1 | — | — | — | 2.1 | 2.1 | — |
| 2) 60°C at atmospheric pressure | — | — | — | — | — | — | 10.3 | 10.3 | — |
| 3) Schedule 6 S | — | — | — | 3.5 | — | — | — | — | = |
| 4) Schedule 8 S | — | — | — | — | 3.5 | — | — | — | — |
| 5) Schedule 9 S | — | — | — | — | — | 3.5 | — | — | — |
| (b) With 12-hour curing (see Note 2) | | | | | | | | | |
| 1) Schedule 8 S | — | — | — | — | — | — | — | — | 3.5 |
| (c) With 24-hour curing (see Note 2) | | | | | | | | | |
| 1) 38°C at atmospheric pressure | 12.4 | 10.3 | 13.8 | — | — | — | — | — | — |
| 2) Schedule 4 S | — | — | — | 6.9 | 6.9 | — | — | — | — |
| 3) Schedule 6 S | — | — | — | 13.8 | — | 6.9 | — | — | — |
| 4) Schedule 8 S | — | — | — | — | 13.8 | — | — | — | — |
| 5) Schedule 9 S | — | — | — | — | — | 6.9 | — | — | — |
| 6) Schedule 10 S | — | — | — | — | — | — | — | — | 6.9 |
| vi) Thickening time (maximum consistency during 15 to 30 minutes stirring period: 30 Bc, minutes, Min (see Notes 2, 4, 5 and 7) | | | | | | | | | |
| (a) Schedule 1 S | 90 | 90 | 90 | — | — | — | — | — | — |
| (b) Schedule 4 S | 90 | 90 | 90 | 90 | — | — | — | — | — |
| (c) Schedule 5 S(see Note 6) | — | — | — | — | — | — | 90<br>(120 Max) | 90<br>(120 Max) | |
| (d) Schedule 6 S | — | — | — | 100 | 100 | 100 | — | — | 180 |
| (e) Schedule 8 S | — | — | — | — | 154 | — | — | — | — |
| (f) Schedule 9 S | — | — | — | — | — | 190 | — | — | 180 |

## 20.5 REINFORCED CEMENT CONCRETE

Reinforced cement concrete is a composite material made up of cement concrete and reinforcement in which the concrete resists compression with reinforcement resisting the tension and shear. It is the most versatile building material available and is extensively used in the construction industry ranging from small structural elements such as beams and columns to massive structures like dams and bridges.

The idea of reinforcing concrete with steel has resulted in a composite material, having the potential of resisting significant tensile stresses. The steel bars are embedded in the tensile zone of concrete to compensate the poor tensile resistance of concrete (Fig. 20.1 (a) (b)). The bond between steel and the surrounding concrete ensures strain compatability. Moreover, the reinforcing steel imparts ductility to this composite material. The reinforcing steel also supplements concrete in bearing compressive forces, as in the case of columns. Here the bars are confined with lateral ties, in order to maintain their positions and to prevent their local buckling. In addition, the lateral ties also serve to confine the concrete, there by enhancing its compression load bearing capacity (Fig. 20.1 (c)). Figure 20.1 depicts the advantages of reinforcing steel bars in beams and columns.

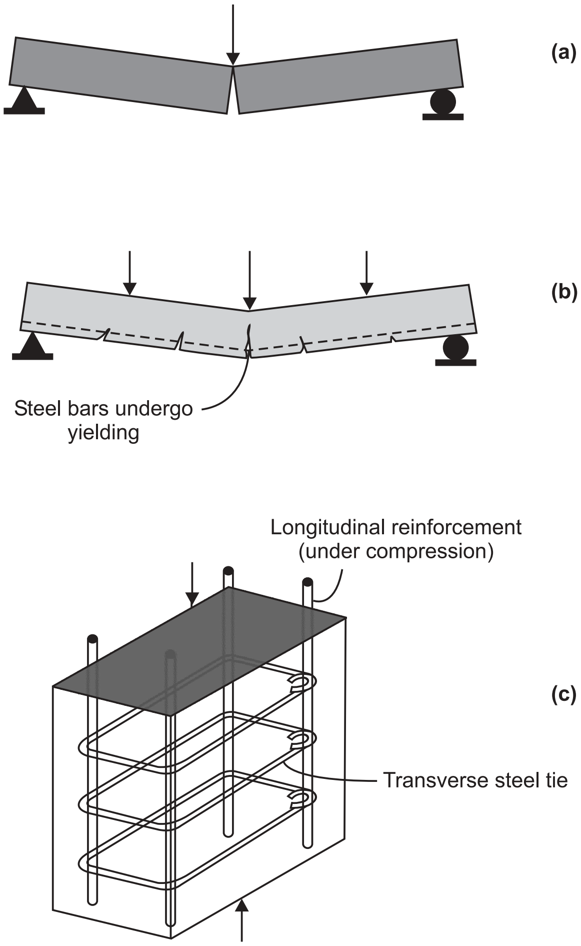

**(a)** Plain concrete beam cracks and fails in flexural tension even under small load

**(b)** Reinforced concrete beam supports loads with acceptably low deformations and fails in a ductile mode under heavy loads

**(c)** Reinforced concrete column

**Fig. 20.1 Contribution of steel bars in reinforced concrete**

## 20.6 PRESTRESSED CONCRETE

One of the serious limitation of reinforced cement concrete is the cracking which is a natural phenomenon for concrete constructions. Once cracks occur they do not disappear even after removal of load. If the width of these cracks is to be kept within permissible limits, the steel stress has to be kept low. Presence of cracks lowers the capacity of structure to bear reversal of stresses, impact vibration and shocks. Also, the reinforcing bars may get corroded in due course of time and the concrete deteriorates. Besides these disadvantages, the presence of cracks makes theory of reinforced concrete quite irrational. Efforts were made to eliminate the cracking of concrete by artificially introducing in it either before or simultaneously with the application of external loads, a compressive force of permanent nature. This force is so applied that it causes compressive stresses in that zone of the member where tensile stress will be caused by external loads. The tensile stress in concrete will thus be neutralized and it will not crack.

A prestressed concrete may thus be defined as a concrete in which stresses of suitable magnitude and distribution are introduced to counteract, to a desired degree, the stresses resulting from external loads. The concept of prestressing concrete was first used by Mandl of France in 1896. In prestressed concrete high strength concrete and steel are desirable. The former is required because of following:

1. The use of high strength concrete results in smaller cross-section of member and hence smaller self weight; longer spans become technically and economically practicable.
2. High bearing stresses are generated in anchorage zones.
3. The shrinkage cracks are reduced, with higher modulus of elasticity and smaller creep strain resulting in smaller loss of prestress.

The loss of prestress at the initial stages is very high and for this reason high strength steel is required. High tensile strength wires with ultimate tensile strength up to 2010 $N/mm^2$ are the choice. For prestressed concrete members, the high tensile steel used generally consists of coires, bars or strands.

Prestressing is achieved by either pre-tensioning or post-tensioning. In the former the wires or cables are anchored, tensioned and concrete is cast in the moulds. After the concrete has gained strength the wires are released. This sets up compression in concrete which counteracts tension in concrete because of bending in the member. In the post-tensioning prestressing force is applied to the steel bars or cables, after the concrete has hardened sufficiently. After applying the full prestress the cable passages are grouted. The minimum 28-day cube compressive strength for concrete is 40 $N/mm^2$ for pre-tensioned members and 30 $N/mm^2$ for post-tensioned members.

### Advantages

1. The cracking of concrete is eliminated enabling the entire cross-section of the member to take part in resisting moment.
2. As dead load moments are neutralized and the shear stresses are reduced, the sections required are much smaller than those for reinforced concrete. This reduces the dead weight of structure.
3. In ordinary reinforced concrete (RCC) the economy is not as pronounced as in pre-stressed concrete (PSC). The prestressing force in most cases is computed strictly from dead load of the structure; consequently, a weight reduction of 25% results in a substantial reduction in the weight of prestressing tendons.

It is widely used for construction of precast units such as beams, floors, roofing systems, bridges, folded plate roofs, marine structures, towers and railway sleepers.

## 20.7 POLYMER CONCRETE

The strength of concrete is greatly affected by porosity and attempts to reduce it by vibration, pressure application, spinning, etc. are of little help in reducing the water voids and the inherent porosity of gel which is about 28 per cent. The impregnation of monomer and subsequent polymerisation reduces the inherent porosity of the concrete. Polymers—polyvinyl acetate, homopolymer emulsions and vinyl acetate copolymer emulsions—are added to increase strength, resistance to oil, grease, and abrasion. They also improve bond between new and old concrete and are useful for prefabricated structural elements and prestressed concrete. The disadvantages are that they are very brittle and expensive.

For heavy duty Industrial floor the concrete mix used is 1:2:2. Concrete to PVA emulsion in the ratio 3:1 is then prepared.

For domestic or office floor cement and sand in the ratio of 1:2 is mixed. The cement mortar: PVA emulsion is then made in the ratio 2:1.

***Types*** The available polymer concrete materials are polymer impregnated concrete (PIC), polymer cement concrete (PCC), polymer concrete (PC) and, partially impregnated and surface coated polymer concrete.

*Polymer Impregnated Concrete* is a conventional concrete, cured and dried in oven. A low viscosity manomer is then diffused and polymerised by using radiation, heat or by chemical initiation. The manomers used are, methylmethacrylate (MMA), styrene, acrylonitrile, t-butyl styrene, etc.

*Polymer Cement Concrete* is made by mixing cement, aggregates, water and manomers, such as polyester-styrene, epoxy styrene, furans, venylidene chloride. The plastic mix is moulded, cured, dried and polymerised.

*Polymer Concrete* In this type of concrete cement is not used and the aggregates are bound with a polymer binder. It is most suitable for structures with a high ratio of live load to dead load and composite construction.

*Partially Impregnated and Surface Coated Concrete* is made by initially soaking the dried specimens in liquid manomer like methyl methacrylate and then sealing them by keeping under hot water at 70°C to prevent loss due to evaporation. The polymerisation is achieved by adding 3 per cent by weight of benzoyl peroxide to the manomer as catalyst. It finds its application in improving durability of bridge decks.

***Application*** Polymer concrete finds its application in the production of prefabricated elements, prestressed concrete, ferrocement products, marine works, nuclear power plants and industrial applications. Because of its high sulphate and acid resistance properties it is most suitable for sewage disposal works.

## 20.8 FIBRE REINFORCED CONCRETE

Conventional concrete is modified by random dispersal of short discrete fine fibres of asbestos, steel, sisal, glass, carbon, poly-propylene, nylon, etc. Asbestos cement fibres so far have proved to be commercially successful. The improvement in structural performance depends on the strength characteristics, volume, spacing, dispersion and orientation, shape and their aspect ratio (ratio of length to diameter) of fibres. A fibre-reinforced concrete requires a considerably greater amount of fine aggregate than that for conventional concrete for convenient handling. For FRC to be fully effective, each fibre needs to be fully embedded in the matrix, thus the cement paste requirement is more. For FRC the cement paste required ranges between 35 to 45 per cent as against 25 to 35 per cent in conventional concrete.

The behaviour of fibre reinforced concrete (FRC) is shown in Fig. 20.2. The tensile cracking strain of cement matrix is about 1/50 of that of yield of steel fibres. Consequently when FRC is loaded, the matrix cracks long before the fibres are fractured. Once the matrix is cracked the composites continue to carry increasing tensile stress, provided the pullout resistance of fibres at the first crack is greater than the load at the first cracking. The bond or the pullout resistance of the fibres depends on the average bond strength between the fibres and the matrix, the number of fibres crossing the crack, the length and diameter of fibres, and the aspect ratio.

The first flexural cracking load on a FRC member increases due to crack arresting mechanism of the closely spaced fibres. After the first crack fibres continue to take load provided the bond is good. Thereafter the fibres, reaching the breaking strain fracture. The neutral axis of the section shifts and the fibres of adjacent layers fracture on reaching the breaking strain. Failure occurs when the concrete in compression reaches the ultimate strain.

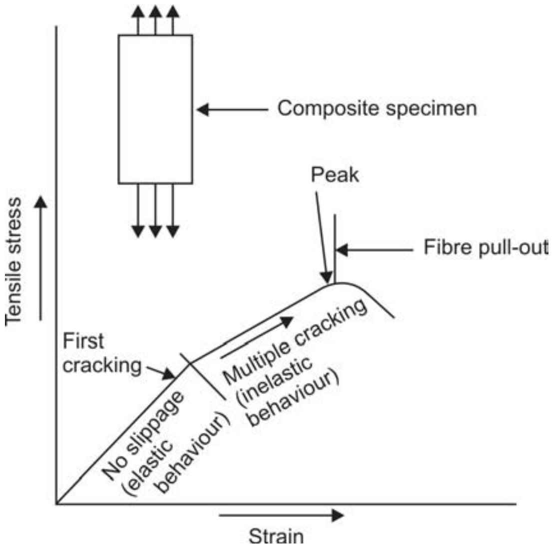

**Fig. 20.2 Behaviour of Fibre Reinforced Concrete**

### *Advantages*

1. Strength of concrete increases.
2. Fibres help to reduce cracking and permit the use of thin concrete sections.
3. Mix becomes cohesive and possibilities of segregation are reduced.
4. Ductility, impact resistance, tensile and bending strength are improved.

### *Disadvantages*

1. Fibres reduce the workability of a mix and may cause the entrainment of air.
2. Steel fibres tend to intermesh and form balls during mixing of concrete.

***Applications*** Fibre reinforced concrete is useful in hydraulic structures, airfield pavements, highways, bridge decks, heavy duty floors, and tunnel linings.

## 20.9 FERROCEMENT

Ferrocement is a composite material in which the filler material (called matrix), cement mortar, is reinforced with fibres, usually steel mesh dispersed throughout the composite, which results in better structural performances than individual ones. The fibres impart tensile strength to the mass.

In rationally designed ferrocement structures the reinforcements consist of small diameter wire meshes wherein uniform distribution of reinforcement is made possible throughout the thickness of the element. Because of the distribution of such reinforcement over the entire matrix, high resistance to cracking is achieved. Toughness, fatigue resistance, impermeability, etc. are also improved. This material which is a special form of reinforced concrete, exhibits a behavior so different from conventional reinforced concrete in performance, strength and potential application that it must be classed as a separate material.

The reinforcement may be hexagonal wire mesh (0.5–1.00 mm diameter at 5–25 mm spacing) welded wire mesh (18–19 gauge), woven mesh, expanded metal sheet and Watson mesh (Fig. 20.3). Generally characteristics of different types of meshes are given in Table 20.3. The skeletal steel may be placed 300 mm apart to serve as a spacer rod to the mesh reinforcement. A rich mix of Portland cement and sand usually 1:2 to 1:1.5 is used as mortar. The thickness of the ferrocement element is kept 10–40 mm, with a clear cover of 1.5–2 mm to reinforcement. No form work is required since the wire mesh and chicken mesh receive the mortar wherein the mortar applied with pressure is held in position by mechanical interlocking.

(a) Square woven wire mesh (b) Square welded wire mesh

(c) Hexagonal wire mesh (d) Expanded metal lath

**Fig. 20.3 Different types of Welded Wire Meshes**

**Table 20.3 General Characteristics of different types of Meshes**

| *Mesh Type* | *Weight of one layer per unit area (kg/m²)* | *Mesh thickness (mm)* | *Steel content (kg/m³)* | *Estimated steel surface per unit volume (mm²/mm³)* |
|---|---|---|---|---|
| Hexagonal wire mesh 12.5 mm × 22 gauge | 0.58 | 0.4 | 410 | 0.275 |
| Square welded mesh 12.5 mm × 12.5 mm × 19 gauge | 1.08 | 2.0 | 540 | 0.248 |
| Expanded metal | 1.22 | 2.5 | 490 | 0.245 |
| Watson mesh | 3.53 | 5.5 | 605 | 0.236 |

Steel bars, generally provided to make the formwork of the structure are known as skeletal steel. The size of the rod varies from 4 to 10 mm and at a spacing of 300 mm apart. In highly stressed structures like boats, barages and tubular sections this spacing is reduced to 75 mm. For structures steel rods, along with wire mesh, are considered as a component of reinforcement imparting structural strength and stiffness, whereas in most of the terrestrial structures wire mesh is treated as the main reinforcement. The steel content in ferrocement various from 1–8%.

Portland cement, rapid hardening Portland cement, Sulphate resisting Portland cement or Portland blast-furnace cement may be used.

Ferrocement which is specially advantageous in spatial structure has relatively better mechanical properties and durability than ordinary reinforced concrete. Within certain loading limits, it behaves as homogeneous. The high surface area to volume ratio (specific surface) of the reinforcement results in better crack arrest mechanism, *i.e.*, the propagation of cracks are arrested resulting in high tensile strength of the material. Recent studies show that the inclusion of short steel fibres in ferrocement increases further the first crack strength of the composite. Its ultimate strength depends almost entirely upon the volume fraction of the wire mesh.

Ferrocement is used in thin-walled structures where strength and rigidity are developed through form or shape. It has the distinct advantage of being moldable and of one piece construction. Other major advantages are its low cost and its non-flamability and high corrosion resistance characteristics. The advantages of ferrocement are:

1. Easy availability of raw materials.
2. Reduction in weight consequent of thin section.
3. Moulding can be done without any formwork.
4. No machinery or sophistication is required in construction.

## Mechanical Properties

Ferrocement, a homogeneous composite material, contains a high percentage of ductile steel wire mesh with a high surface area to volume ratio in a brittle cement-mortar matrix, enables the matrix to assume the ductile characteristics of the reinforcement. The strength of ferrocement, as in ordinary concrete, is commonly considered as the most valuable property, although in many practical cases other characteristics, such as durability and permeability may in fact be more important. Nevertheless, strength always gives an overall picture of the quality of ferrocement, as strength is directly related with the properties of its hardened cement paste and reinforcement. Some of the properties of steel were meshes and rainforcement are given in Table 20.4.

**Table 20.4 Mechanical properties of steel wire meshes and reinforcing bars**

| *Property* | *Woven Square mesh* | *Welded square mesh* | *Hexagonal mesh* | *Expanded metal lath* | *Logitudinal bars* |
|---|---|---|---|---|---|
| Yield strength, $f_y$, MPa | 450 | 450 | 310 | 380 | 410 |
| Effective modulus, $E_{RL}$, Gpa | 140 | 200 | 100 | 140 | 200 |
| Effective modulus, $E_{RT}$, Gpa | 160 | 200 | 70 | 700 | — |

**Notes: $E_{RL}$ = Value of modulus in the longitudinal direction.**
**$E_{RT}$ = Value of modulus in the transverse direction.**

Ideally, ferrocement acts as a homogeneous material in the elastic range and the stress of the composite is obtained from the laws of mixture. When a ferrocement specimen is subjected to increasing tensile load, three stages of behavior are observed. These stages are classified according to the width of cracks. Experimental studies on the behavior of ferrocement specimens in tension show a typical stress strain curve as shown in Fig.20.4. An idealized curve of a ferrocement section in tension is also shown in Fig. 20.4. A brief description of the stress-strain curve of ferrocement at different stress levels are described as follows:

***Elastic Range*** The stress-strain curve is essentially linear in this stage. Elastic deformations occur at this stage in both metal and crystalline grids as well as in colloids. There is no evidence of crack formation even when observed with magnification. The limit of elasticity of ferrocement is also higher than that of unreinforced concrete.

With a further increase of stress, ferrocement become quasi-elastic. The relatively small plastic strains of the colloids are restrained by the elastic deformation of metal wires. The micro cracks are invisible to the naked eye and are difficult to observe even when optical instruments

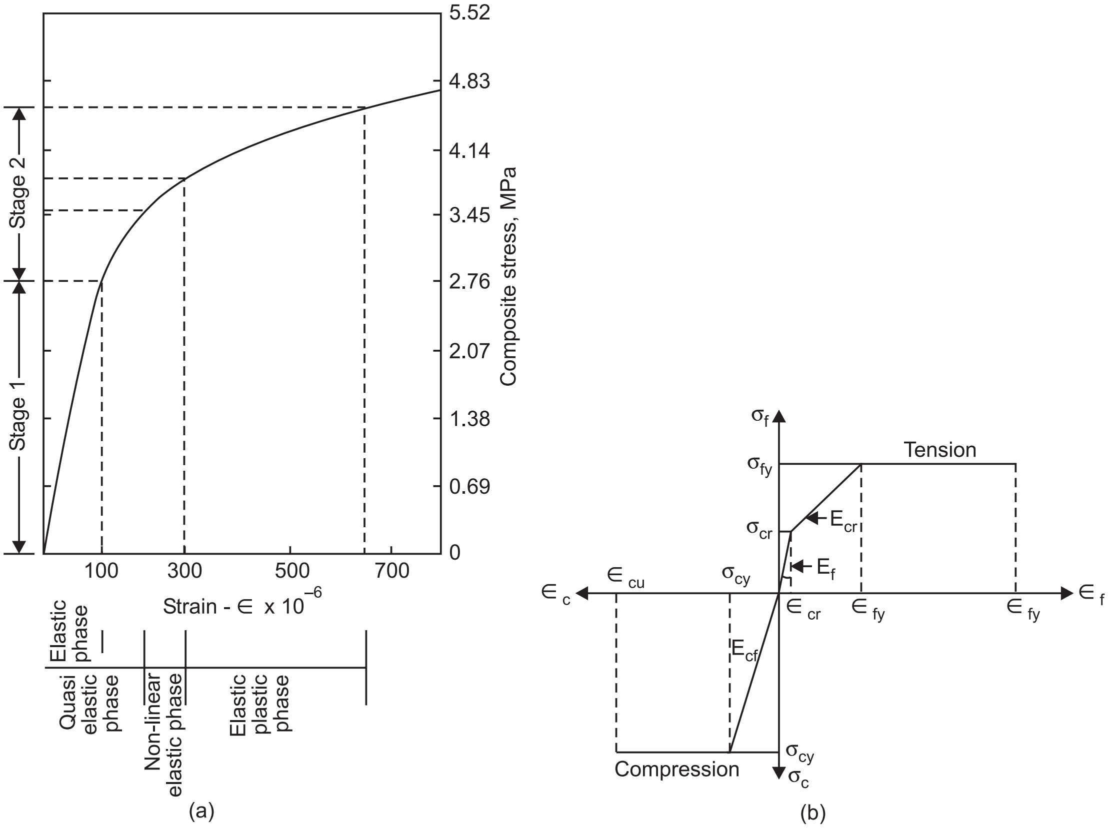

**Figure 20.4 Stress-strain Curves of Ferrocement in Tension and Compression**
**(a) A typical Curve of Ferrocement in Tension**
**(b) A idealized Curve in Tension and Compression**

are used. These two stages–the linearly elastic and quasi elastic constitute the practical elastic working ranges of ferrocement.

***Cracked Range*** Further increase of stress causes very definite plastic deformation of the colloids as well as the crystalline grids, which in turn is resisted by the reinforcement. This is the time of the formation and widening of the exploitation cracks. The stress-stain curves deviates from linearity and an increasing number of cracks rather than increasing width of cracks are observed with increasing stress. The cracks are very fine in this stage and are a function of the specific surface of the reinforcement.

***Yield Range*** As the load is increased the process of crack widening continues at a uniform rate. The maximum number of cracks that are going to develop have already developed before this stage. Increasing mortar stains are caused due to the increasing width of cracks. Composite action between the mortar and reinforcement continues up to the attainment of crack width of about 100 microns and thereafter, the reinforcement carries all the tensile forces.

### Factor Affecting the Cracking Behavior

As stated earlier, ferrocement specimens exhibit finer and more numerous cracks than conventionally reinforced concrete. Research studies have shown that crack width in reinforced concrete can be reduced by increasing the bond between reinforcement and concrete, by increasing the distribution of reinforcement and by reducing the thickness of cover. All these factors are favorable in ferrocement. Crack width is nearly zero at the interface between the steel and mortar and increases from the interface towards the surface. Therefore the smaller distance between the interface and the surface of structure, *i.e.*, the cover, the smaller is the crack width. Specific surface and volume fraction of the reinforcement are found to play a significant role in the cracking behavior of ferrocement and their influences are described below.

### Effect of Specific Surface on the First Crack Strength

The stress and strain at first crack increases with increasing specific surface, up to certain point. This means that the total bond forces between the steel and the mortar play an important role in influencing the cracking behavior of ferrocement. After the occurance of first crack, the number of cracks increase with increasing load. The optimum value of specific surface, considering stresses at first crack, seems to lie between 1.4 $cm^2/cm^3$ to 2.0 $cm^2/cm^3$.

### Effect of Volume Fraction on the First Crack Strength

By increasing volume of reinforcement the stress at first crack increases. However, this increase is different for each size of mesh employed. In addition, it not increases always that smaller the dimension of the mesh, that is the smaller the spacing between longitudinal wires, the higher the first crack stress for the same volume.

**Applications** The excellent crack control and impermeability characteristics of ferrocement make it suitable for liquid retaining structures, boat building, gas containers, caissons, canal lining, etc. Since it is cheaper than steel and R.C.C. and can be cast in thin sections it is most suitable for low cost roofing, precast units, manhole covers, casings, etc. and is the most appropriate building material for the construction of domes, vaults, shells, grid surfaces, corrugated sheets and folded plates.

## 20.10 LIGHT WEIGHT CONCRETE

Conventional cement concrete is a heavy building material. For structures such as multistorey buildings it is desirable to reduce the dead loads. Light weight concrete (LWC) is most suitable for such construction works. Lightweight aggregate concrete is particularly suitable for use where low density, good thermal insulation or fire protection are required but not all of the available aggregate are equally suitable for any particular application. It is best produced by entraining air in the cement concrete and can be obtained by anyone of the following methods:

1. By making concrete with cement and coarse aggregate only. Sometimes such a concrete is referred to as *no-fines concrete.* Suitable aggregates are—natural aggregate, blast furnance slag, clinker, foamed slag, etc. Since fine aggregates are not used, voids will be created and the concrete produced will be light weight.

2. By replacing coarse aggregate by porous or cellular aggregate. The concrete produced is known as *cellular concrete* which is further classified as follows:

***Based on Manufacturing Method***—classified as foam concrete and gas concrete.

***Based on Type of Binding Material***—classified as gas and foam concrete (Portland cement), gas and foam concrete (lime and sand), gas slag and foam slag concretes (lime and finely divided blast furnace slag or fly ash).

***Foam Concrete*** is obtained by mixing cement paste or mortar with stabilized foam. After hardening, the foam cells form concrete of a cellular structure. The foam is obtained by stirring a mixture of resin soap and animal glue. The best foaming agents are alumino sulpho napthene compounds and hydrolysed slaughter blood. This concrete is very suitable for heat insulation purposes.

*Heat insulating foam concrete* is cast into blocks measuring 100 × 50 × 50 cm and over, which, once hardened, can be sawn into slabs of 100 × 50 × 50 to 100 × 50 × 12 cm. Heat insulating foam concrete has a strength of up to 2.5 $N/mm^2$ and a coefficient of heat conductivity of 0.10–0.20 k Cal/m.h.°C. This kind of foam concrete is used as heat insulating material for reinforced concrete floors, partitions, etc.

*Structural-and-heat insulating foam concrete* has a strength of 2.5 – 7.5 $N/mm^2$ and a coefficient of heat conductivity of 0.20–0.40kCal/m.h.°C and is used for exterior walls.

*Structural foam concrete* is used to make reinforced floor components, the items being reinforced by two wire meshes from wires of 3–5 mm thick. Structural foam concrete has a strength up to 15 $N/mm^2$ and a coefficient of heat conductivity of 0.40–0.60 kCal/m.h°C. Heat insulating foam concrete is widely used in three-layer exterior walls of heated buildings.

***Gas Concrete*** is manufactured by expanding the binding material paste, which may or may not include aggregates. It is also known as *aerated* concrete. The mix is expanded by gas forming substances, but care should be taken to synchronize the end of gas formation with the beginning of mix setting. The setting time of cement may be regulated with the aid of accelerators (such as dihydrate gypsum) or retarders (such as industrial sugar, or molasses, introduced in amounts from 0.1 to 2.5 $kg/m^3$).

The approximate relative proportions of gas concrete ingredients are as follows: 90% Portland cement, 9.75% powdered lime, 0.25% aluminium power (for a water to cement ratio of 0.55–0.65). About 2/3 of sand are ground in a wet state. The basic considerations in choosing the proportion of light weight concrete are economy consistent with placability and adequate strength, and attainment of specified bulk density with the lowest consumption of cement.

Lime for preparing gas concrete should be of the top grade, quick-slaking and low-magnesium variety. In sand intended for gas concrete, the content of clay impurities should not exceed 1.5% by weight, since the impurities lower the strength and slow down gas evacuation and concrete expansion. The gas forming agent used is finely ground aluminium powder. The evolving hydrogen produced during the chemical reaction between hydrate calcium oxide and aluminium according to the equation

$$2Al + 3Ca(OH)_2 + 6\ H_2O = 3\ CaO.Al_2O_3.6H_2O + 3H_2$$

expands the cement paste which retains its porous structure as it hardens.

Items from gas concrete are manufactured in the manner described below. A mixture of ground sand and water is fed to the stirrer and mixed with cement, aluminium powder, water and un-ground sand, after which the mix is cast into moulds. After 4–5 h of hardening, gas concrete is cut into slabs and loaded into autoclaves where the items finally harden at a temperature of 175°C and at a pressure of 8 atm. Autoclaving enhances the strength of gas concrete and, in addition, substantially reduces the consumption of cement which can thus be fully or partially replaced by lime.

Gas concrete is similar to foam concrete in properties and is used for the same purpose. However, it is simpler to manufacture, and items form it have more stable qualities than from foam concrete: in particular, this applies to their bulk densities. These are the chief advantages of gas concrete over foam concrete. Among the main shortcomings of cellular concrete are high tendency to deformation, shrinkage, etc.

## Characteristics

*Density* The density of LWC varies from 300–1200 kg / $m^2$

*Workability* Due to low density and the characteristic texture of porous aggregate especially in the crushed state, the workability of concrete needs special attention. In general, placing compacting, and finishing lightweight aggregate concrete requires relatively less effort; therefore, even 50 to 75 mm slum may be sufficient to obtain workability of the type that is shown by 100 to 125 mm slump of normal-weight concrete.

*Unit Weight* Unit weight and strength are the two properties generally sought from lightweight concrete. With given materials, it is generally desired to have the highest possible strength / unit weight ratio with the lowest cost of concrete. The air-dried unit weight of concrete is limited to a maximum of 18.40 kN / $m^3$. The use of normal sand to control the properties of hardened concrete tends to increase the unit weight, although this tendency is partially offset from the balancing effect of entrained air, which is invariably prescribed for improving the workability. Most structural lightweight concretes weigh between 16.00 to 17.60 kN / $m^3$; however, job specifications in special cases may allow higher than 18.40kN / $m^3$.

*Strength* Design strengths of 20 to 35 MPa, 28 day compressive strengths are common, although by using a high cement content and good quality light weight aggregate of small size (9 to 13 mm maximum) has made it possible, in some precast and prestressing plants, to produce 40 to 48 MPa concrete. Lightweight aggregates with controlled micro porosity have been developed to produce 70 to 75 MPa lightweight concrete which generally weigh 18.40 to 20.00 kN / $m^3$. The ratio between the splitting tensile strength and compressive strength decreases significantly with increasing strength of lightweight concrete.

*Thermal Insulation* is about 3–4 times more than that of bricks and about 10 times than that of concrete.

*Fire resistance* is excellent.

*Sound insulation* is poor.

*Durability* Aerated concrete is slightly alkaline. Due to its porosity and low alkalinity the reinforcement may be subjected to corrosion and as such, require special treatments.

*Repairability* Light weight cellular element can be easily sawn, drilled or nailed which makes for easy construction and repairs.

*Economy* Due to light weight and high strength to mass ratio, the cellular products are quite economical.

### *Advantages*

The basic economy of LWC can be demonstrated by the savings achieved in associated reinforcement requirment. LWC has superior resistance of shear elements to earthquake loading since seismic forces are largely a direct function of deal weight of a structure, is also one among the other advantages of LWC. Due to lower handling transportation, the construction cost, the light weight concrete is ideally suited for the production of precast concrete elements and prefabricated elements.

### *Applications*

1. Low density cellular concrete is used for precast floor and roofing units.
2. As lood bearing walls using cellular concrete blocks.
3. As insulation cladding to exterior walls of structures.

## 20.11 HIGH STRENGTH CONCRETE

For mix made with normal weight aggregates, high strength concrete (HSC) is considered to be the one having a compressive strength in excess of 40 MPa. To produce concrete above this strength more stringent quality control and more care in selection and proportioning of materials are needed. The tentative classification of HSC is as given in Table 20.5. The tricalcium aluminate component is kept as low as possible (<8%). Most cements used to produce HSC have fineness in the range of 300–400 $m^2/kg$ with an exception of high early strength cement for which fineness should be at least 450 $m^2/kg$. For HSC a smaller maximum size of coarse aggregate leads to higher strength. Fine aggregate should have a F.M >3.

Experimental studies also show that in many respects the microstructure and properties of HSC are considerably different from those of conventional or normal concretes.

**Table 20.5 Classification of high strength concretes**

| *S.No.* | *Type* | *w/c ratios* | *28-day strength (MPa)* | *Remarks* |
|---|---|---|---|---|
| 1. | Normal consistency | 0.35–0.40 | 35–80 | 50–100 mm slump, high cement contents |
| 2. | No-slump | 0.30–0.45 | 35–50 | Less than 25 mm slump, normal cement contents |
| 3. | Very low w/c ratios | 0.20–0.35 | 100–170 | Use of admixtures |

The porosity of the three phases of concrete (*i.e.*, aggregate, the hardened cement paste and the aggregate-cement bond) is the most important strength determining factor in HSC. Determination of porosity of the individual micro-structural phases of concrete *i.e.*, the matrix and the transition zone is impractical, therefore, precise models of predicting strength cannot be developed. However, over a period of time many useful empirical relations have been propounded which for practical purposes account for the influence of numerous factors including porosity of individual micro-structural phases on compressive strength. One such relation is Abram's water/cement ratio rule.

$$f_c = \frac{A}{B^{w/c}}$$

where w/c represents the water-cement ratio of the concrete mix and A and B are empirical constants. When the workability is adequate, it appears that the water-cement ratio holds the key to the porosity of both the hydrated cement paste (HCP) and transition zone. Furthermore, with a low water cement ratio it is generally observed that considerable high strength gains are achieved for very small decreases in the w/c ratio. The main problem with this is that with the decreasing water content, fresh concrete becomes more and more difficult to mix, place, and consolidate. So for the production of HSC, the opposing effects of w/c ratio on consistency and strength of concrete cannot be harmonized without the use of water reducing admixtures like superplasticizers. As discussed earlier, since it is the transition zone that is the weakest component of the HSC, so at a given w/c ratio, the strength of concrete mix can be increased significantly by simply reducing the maximum size of coarse aggregate. This has a beneficial effect on the strength of transition zone due to increased surface area.

The requirements of low water cement ratio and small aggregate size mean the cement content of concrete mix will be high, generally above 385 kg/m$^3$. Cement contents of approximately 600 kg/m$^3$ and even higher have been investigated, but found undesirable. With the increasing proportion of cement in concrete a strength plateau is reached, that is, there will by no more increase in strength with further increase in cement content. This is probably due to the inherent inhomogeneity of the HCP, in which the presence of large crystals of calcium hydroxide represent weak area of cleavage under stress. Such inhomogeneous and weak area in transition zone are vulnerable to micro cracking even before the application of external load which can happen as a result of development of stresses due to thermal-shrinkage or drying-shrinkage. The increase in cement content results in increased heat of hydration, and drying shrinkage of concrete. As a result of this micro-cracking, considerable differences arise between the elastic response of the cement paste and that of the aggregate.

When this inhomogeneity becomes strength limiting in concrete, the solution is to modify the microstructure so that components causing inhomogeneity are eliminated or reduced. In case of plain cement concrete (PCC), an inexpensive and effective way to achieve this is by incorporation of puzzolanic materials into concrete mixture such as fly ash. Fly ash reacts with calcium hydroxide to form a reaction product that is similar in composition and properties to the principal distributions of OPC; also the puzzolanic reaction is accompanied by a reduction in large pores—an effect that is equally important for the enhancement of strength of the system. At a given w/c ratio, when low calcium fly ash with calcium oxide content less than (6%) is used as a partial replacement of OPC, the early strength (1-and 7-day) of concrete at normal temperatures may be reduced almost in direct proportion to the amount of fly ash present in the total cementing material (cement + fly ash). However, high calcium fly ash with calcium oxide content more than 15% or ground blast furnace slag shows a significant strength within the first 7 days of hydration. Highly reactive puzzolanas such as condense silica fume and rice husk can make a strength contribution even at 3 days.

Although normal water reducing admixtures can be used for making high-strength concrete mixes, concretes with very high consistency (200 to 250 mm slump) and more than 70 MPa strength (less than 0.3 w / c ratio) are more easily produced by application of high range of superplasticizing admixtures. It is generally known that the addition of 0.5 to 1.5% of a conventional superplasticizer by weight of cement to a concrete mix with 50 to 75 mm slump will cause a dramatic increase in the consistency (200 to 250 mm); however, this high consistency concrete tends to revert back to original consistency within 30 to 60 minutes. One way is to maintain large increases in the slump of superplasticized concrete by repeated dosages of the admixture. However, segregation may occur, when the second or third dosage of admixture is added after slump loss. The other approach involves modification of the admixture composition with a retarding agent so that the original high consistency may be maintained for 3 to 6 hrs.

## Characteristics

*Workability* In the early stages of its development, the HSC has a tendency to be sticky and stiff due to large amounts of fines (high cement content, and pozzolana), a low water-cement ratio, and a normal water-reducing admixture. However, with the advent of superplasticizers it is possible to have a desired high workability without causing segregation even at a lower w / c ratio of 0.3.

*Strength* The most noteworthy point about HSCs is their capacity to develop strength at a rapid rate without steam curing. Concrete can develop 20 to 27 MPa on normal curing within 24 hours and the ultra HSC can develop 42 MPa in 12 hours and 64 MPa in 24 hours.

*Microstructure, Stress-Strain Relation, Creep and Fracture* As a result of reduction in the size and number of micro cracks in HSCs, its stress-strain relation, creep and fracture behaviour is different from the normal concretes. HSCs, having compressive strengths in the range of 30 to 75 MPa behave more like a homogeneous material as compared to PCC. For HSCs the stress-strain curves are steeper and more linear to a higher stress-strength ratio than in normal strength concretes, because of a decrease in the amount and extent of micro-cracking in the transition zone. Thus it shows a more brittle mode of fracture and less volumetric dilation. Also the amount of micro-cracking in HSC associated with shrinkage, short term loading, and sustained loading is significantly less.

*Durability* It has been found that primarily due to low permeability, HSCs exhibit excellent durability to various physical and chemical agents that are normally responsible for concrete deterioration. Due to high cement content thermal cracking can be durability problem in structures using HSC. It has also been found that there is an expected temperature rise of 10–40°C for every 100 $kg/m^3$ cement content.

***Applications*** The use of the highest possible strength concrete and minimum steel offers the most economical solution for columns of high rise buildings. It has been found that there is an increase of only 3.1 times in price for an increase of 4.7 times in load carrying capacity. This clearly demonstrates the economy of using HSC in multistorey buildings With concrete, one can “fast track”, that is, start construction even when the superstructure is only partially built and thus get the building completed sooner, as against with the use of a steel frame. So far industrial application, HSCs are limited to structural members that are not exposed to freeze thaw cycles. It seems that superplasticized, low w / c ratio HSC containing high cement content and a good quality puzzolana should have a great potential of use where impermeability or durability, not strength, is the main consideration. Such applications include floors in the chemical and food industry, and bridge deck overlays that are subject to severe chemical and physical processes of degradation. The first known use of HSC was in the construction of the 53 storey Helmsley Palace Hotel in New York in 1979. The HSC was used to reduce the size of columns.

As is well known, an important advantage of the use of puzzolanas in concrete is that relatively less heat of hydration is generated per unit strength; therefore the rise of thermal cracking is reduced. The construction of New Tjorn Bridge in Sweden in 1981 is documented to be the first known use of condensed silica fume in HSC and where heat of hydration was the main consideration. HSC is being increasingly selected for the construction of islands in ocean due to the high durability in sea water environment.

## 20.12 SHRINKAGE COMPENSATING CONCRETE

Shrinkage compensating concrete (SCC) is an *expansive cement concrete* which, when properly restrained by reinforcement or other means, will expand an amount equal or slightly greater than the anticipated drying shrinkage. Because of the restraint, compressive stresses will be induced in the concrete during expansion. Subsequently drying shrinkage will reduce these stresses. Ideally, a residual compression will remain in the concrete, eliminating the risk of shrinkage cracking. As the expansive cement used in the concrete hydrates, large amount of ettringite are formed. When the concrete sets and develops strength, it will offer bond to the reinforcement and at the same time start expanding if sufficient quantity of curing water is present. Since the concrete is bonded to steel, its expansion under the restraining influence of steel induces tension in the latter while the concrete itself goes into compression. At the end of moist curing, when the element is exposed to drying conditions, it will shrink like a PCC. However, the shrinkage will first relieve the precompression before inducing tensile stress in concrete. By preventing the build up of high tensile stress, the risk of cracking of concrete due to drying shrinkage is reduced.

Current design and construction practices assume that concrete will crack, and try to get around the problem in many ways, such as selection and proportioning of concrete mixes that will shrink less, provision of adequate joints in floor slabs or pavements, and reinforcement of concrete elements with steel. The advent of expansive cement has offered an alternative and cost effective approach. The same basic materials and methods necessary to produce high quality PCC are required to produce satisfactory results in the use of SCC. Additional care, however, is necessary to provide continuous moist curing for at least 7 days after placement, in order that the expansion does take place, and the structural design must be such as to ensure adequate expansion to offset subsequent drying shrinkage. A comparison of PCC with SCC is given in Table 20.6.

### Characteristic

*Workability* Because of the water-imbibing characteristics of ettringite, which forms in relatively large quantities during very early stages of hydration, the concrete mix tend to stiff but is highly cohesive. Compared to OPC, the use of a somewhat higher w/c ratio (without the possibility of strength impairment) than recommended by the standard water-cement strength relationships of PCC is, therefore, permitted with expansive cements for achieving a reasonable consistency. The slumps in the range of 100 to 150 mm are recommended for most structural members, such as slabs, beams, reinforced walls and columns.

*Slump Loss* Slump loss under hot (concrete temperature 32°C or higher) and dry conditions is more serious a problem in shrinkage-compensating concrete than in PCC. As a result of slump loss, excessive retempering of concrete on the job site will not only reduce the strength but also the expansion, which defeats the purpose for which the concrete is used.

*Plastic Shrinkage* Because of lack of bleeding and quicker stiffening and setting of concrete under hot, dry, and windy conditions, plastic shrinkage cracking is another problems for which extra precaution must be taken when using the shrinkage-compensating concrete. When fresh concrete is likely to be in contact with an absorptive surface such as a dry soil or an old concrete, the base should be thoroughly strutted by soaking it the evening before placement.

**Table 20.6 Comparison of Properties of SCC with PCC**

| *S. No.* | *Types of Property* | *Characteristics of SCC relative to PCC of similar w/c ratio* |
|---|---|---|
| 1. | Workability | |
| | • Consistency | Stiffer |
| | • Cohesiveness | Better |
| 2. | Time of set | Quicker |
| 3. | Strength | Better |
| 4. | Impermeability | Better |
| 5. | Drying Shrinkage | Similar |
| 6. | Creep | Similar |
| 7. | Elastic modulus | Similar |
| 8. | Overall Dimensional Stability | Better |
| 9. | Durability | |
| | Resistance to | |
| | • Abrasion | Better |
| | • Erosion | Better |
| | • Sulphate attack | Similar to expansive PCC |
| | • Frost action | Similar when equivalent air entertainment present |

*Strength* The development of compressive, tensile, and flexural strength in shrinkage-compensating concrete is generally influenced by the same factors as PCC. In the case of SCC, a denser cement paste matrix and a stronger transition zone between the cement paste and coarse aggregate are the factors responsible for strengths higher than those of PCC made with an equivalent w/c ratio.

*Volume Changes* The drying shrinkage characteristics of a SCC are comparable to those of a corresponding PCC; the rate and the magnitude of shrinkage in both the cases are affected by the same factors, such as aggregate content and type, and water content. However, in the case of SCC, the influence of the w/c ratio on expansion during the early moist curing period is quite important. Since the degree of needed pre-compression in SCC may reduce considerably with w/c ratio above 0.6, it is recommended that low w/c ratios be used even when this is not needed from the standpoint of strength.

*Durability* For several reasons, such as the restrained expansion of concrete, lack of bleeding, and little or no micro-cracking by drying shrinkage, the SCC provides a more dense and essentially impermeable mass than does PCC of an equivalent w/c ratio in the range of 0.4 to 0.6.

***Applications*** The higher cost of the expansive cement used can be balanced by the reduced amount of drying shrinkage reinforcement required, large placement sections, and fewer construction joints and water stops compared with PCC construction. Since 1990s, expansive cements have been used in several countries for the purpose of producing both shrinkage-compensating concrete and self-stressing concretes. Most of the applications have been in structural elements, such as slabs, payments, prestressed beams and roofs.

## 20.13 HEAVYWEIGHT CONCRETE

The heavy weight concrete also known as *high density concrete* is used in the construction of radiation shields. These concretes are produced generally by using natural heavyweight aggregates. The unit weights are in the range of 33.60 to $38\text{kN}/\text{m}^3$ which is about 50% higher than that of normal weight aggregates. Concrete is usually the most economical material when it comes to use in biological shielding in nuclear plat, medical units, and atomic research and testing facilities. However, where the usable space is limited, the reduction in the thickness of the shield is accomplished by the use of heavyweight concrete. Concrete is an excellent shielding material that possesses the needed characteristics for both neutron and gamma ray attenuation, has satisfactory mechanical properties, and has a relatively low initial as well as maintenance cost. Since concrete is a mixture of hydrogen and other light nuclei, and nuclei of higher atomic number, and can be produced within a relatively wide range of density, it is efficient in absorbing gammas, slowing down fast neutrons, and absorbing resonance and slow neutrons. The hydrogen and oxygen, contained in chemically combined form in the hydrated cement, moderate the neutron flux satisfactorily.

Because of the high density of aggregate particles, segregation of fresh concrete is one of the principal concerns in mix proportioning. From the standpoints of high unit weight and less tendency for segregation, it is desirable that both fine and coarse aggregates be produced from high-density rocks.

## 20.14 ROLLER COMPACTED CONCRETE

Roller-compacted concrete (RcC) presents a relatively recent development in the construction technology of dams and locks. It is based on the concept that a no-slump concrete mixture transported, placed, and compacted with the same construction equipment that is used for earth and rockfill dams, can meet the design specifications for conventional mass concrete. It is a mixture of aggregates, cement (with or without puzzolanas), water and sometimes water reducing admixtures, proportioned to support external compaction equipment. The stiff (dry or lean), zero slump concrete mixture has consistency of damp gravel. The air entraining, water reducing and set controlling admixtures are effective in reducing the vibration time required for full consolidation of RcC. This lowers the entrapped air-void content, increases strength and lowers the permeability of concrete.

RcC differs from conventional concrete principally in its consistency requirement; for effective consolidation, the concrete must be dry to prevent sinking of the vibratory roller equipment but wet enough to permit adequate distribution of the binder mortar throughout the material during the mixing and vibratory compaction operations. The conventional concept of minimizing water-cement ratio to maximize strength does not hold; the best compaction gives the best strength, and best compaction occurs at the wettest mix that will support an operating vibratory roller. So consistency requirement play a major part in the selection of materials and mix proportions. From the standpoint of workability, fly ash is commonly included in RcC mixtures.

As compared to conventional concrete typical RcC mixes contain less cement and cementitious material paste (250–350 $kg/m^3$) and significantly high fly-ash proportion (25-70%) by weight of cementitious material. The 28 day strength is comparable with OPC and even sometimes greater.

A problem created by the drier consistency of RcC is the difficult bonding of fresh concrete to hardened concrete. The use of special high consistency bedding mixtures for starting the new concrete placement is helpful in reducing the tendency to form cold joints. The creep and thermal properties of RcC are within the range of those of conventional normal concrete.

**Advantages**

1. Cement consumption is lower because much leaner concrete can be used.
2. Form work costs are lower because of the layer placement method.
3. Pipe cooling is unnecessary because of the temperature rise.
4. Cost of transporting concrete is lower than with the cable crane method because concrete can be hauled by end dump trucks; it is spread by bulldozers and compacted by vibratory rollers.
5. Rates of equipment and labour utilization are high because of the higher speed of concrete placement.
6. The construction period can be shortened considerably.

**Applications** RcC finds its best application in the construction of concrete pavements because of good aggregate interlocking, rapid construction in short time and fast rate of development of strength permitting early opening for traffic. It also finds its applications in construction of dams, heavy duty parting runways, storage areas and yards.

## 20.15 READY MIXED CONCRETE (RMC)

Ready mixed concrete (RMC) is a concrete, delivered at site or into the purchaser's vehicle, in plastic condition and requires no further treatment before being placed in a position in which it is to set and harden. It is a high quality concrete of required grade produced under strictly controlled conditions in a centralised automatic batching plant and supplied to the customer in a transit mixer truck for its placement at site. The concrete can be mixed either dry at the batching plant, loaded into agitator truck mixers and water added during transportation; or it can be mixed wet at the batching plant, discharged into the agitator truck mixers and transported to site. The first RMC plant was established in the year 1992 in Pune. At present, RMC plants are located in almost all the cities of India.

Use of RMC to its full advantage requires more careful planning on the site as compared to the site mixing. Due to better quality control measures adopted, RMC can be considered to be almost a factory-made product, yet it is not. It is advantageous not only for mass concreting but also for small quantities of concrete to be placed at intervals. RMC is extremely useful on congested sites or in road construction where limited space is available for aggregate stock piling and mixing plant. The major set back to the use of RMC is its cost. Though a little bit expensive, the increasing emphasis on quality, with skilled labour becoming expensive, and its inherent advantages out weigh the cost.

Quality of RMC is generally specified in terms of performance parameters, *i.e.*, purchaser specifies the strength level and intended use. To maintain the quality of RMC the uniformity requirements listed in Table 20.7 must be observed strictly.

**Table 20.7 Typical requirements for Uniformity of Concrete**

| *S. No.* | *Test* | *Requirement* |
|---|---|---|
| 1. | Weight per cubic metre calculated on an air-free basis | 16 kg/m$^3$ |
| 2. | Air-content, per cent by volume of concrete | 1.0 |
| 3. | Slump: | |
| | If average slump is 10 cm or less | 2.5 cm |
| | If average slump is 10 to 15 cm | 3.8 cm |
| 4. | Coarse aggregate content, per cent (portion by weight of each sample retained on 4.75 mm IS Sieve) | |
| | Unit weight of air-free mortar, per cent based on average of all comparative samples tested | 6.0 |
| 5. | Unit mass of air-free mortar, per cent based on average for all comparative samples tested | 1.6 |
| 6. | Average compressive strength at 7 days for each sample based on average strength of all comparative specimens, per cent. | 7.5 |

A comparison of RMC and site mixed concrete is presented in Table 20.8.

**Table 20.8 Comparison of RMC and site mixed concrete**

| *Particulars* | *Site Mixed Concrete* | *Ready Mixed Concrete* |
|---|---|---|
| *Production* | | |
| Raw material | Required near mixer | At batching plant |
| Weigh batching | Manually (appx. Qty) | Computerized |
| Adjustment for moisture | Approximate | Computerized |
| Water-cement ratio | Manually (appx.) | Computerized |
| Admixture dose | Manually (appx.) | Computerized |
| Mixing | Tilting mixers | Auto mixers |
| Batch size | 140 litres | 1000 litres |
| Discharge | Platform | Transit mixers/Pump |
| Rate | 3 m$^3$/hr/mixer | 56 m$^3$/hr/plant |
| *Quality* | | |
| Degree of control | Fair | Very good |
| Yield | Variable | Consistent |
| Testing of fresh concrete | Once/25 batches | Each batch |
| *Raw material* | | |
| Selection/Sourcing | Client/Consultant | Concrete supplier |
| Testing | Client/Consultant | Concrete supplier |
| Storage | Multi locational | Single point |
| Space requirements | Large | Limited area |
| *Delivery* | Manual with mixers placed near the Pour/Hoist/Crane | Transit mixer (to the site) |
| *Placing* | | |
| Mode | Manual/Hoist/Crane | Concrete pump |
| Rate | 1.5 m$^3$/hr | As per requirement up to 56 m$^3$ hr |
| *Time frame* | | |
| Foundations | 100 m$^3$/day | Up to 500 m$^3$/day |
| Columns/slab | 70 m$^3$/day | Up to 200 m$^3$/day |

## Admixtures in RMC

Generally RMC is transported to sites which are located at long distances from the batching plants. At the delivery point, concrete should be workable and plastic. The transit period is sometimes four to five hours. The ordinary concrete will suffer slump loss due to the time lost in transit and evaporation of water due to atmospheric conditions such as high temperature. Therefore, admixtures will be required to extend the setting time and, retention of specified slump of concrete. Superplasticizers are, therefore, used to assure quality, workability, and strength of ready mixed concrete. Two types of admixtures are in use—the high performance water reducing admixtures and a high range water-reducing super-plasticizers. High performance water reducing admixtures have been specially designed to retain workability even in high ambient temperature. The examples are conplast RMC P 333 and conplast RMC P 505. The advantages of using high performance water reducing admixtures are:

1. Improved cohesion and reduced bleeding and segregation.
2. Makes the mix cohesive even if the aggregates are of slightly poor grading.
3. Since chloride free it is safe for use in reinforced and prestressed concrete.
4. Improved workability and workability retention with controlled extended setting time and hence ideal for use in hot weather condition.
5. Workability increases without extra water addition.
6. Assists in producing dense, close textured, low permeability concrete thus enhancing durability.
7. Water reduction helps in improvement of compressive strength at all ages.

The high range water-reducing superplasticizers are designed to impart high workability and slump retention for low and medium grades of concrete. Some of the high range water-reducing superplasticizers are conplast RMC SP 444, conplast RMC SP 555. Another admixture, the high early strength superplasticizer, *e.g.*, Zentrament FBV is used to impart high early strength to RMC. The concrete produced with this admixture is homogeneous and free from segregation and bleeding. Also a saving of 20% of cement is achieved for the same slump and strength. The advantages of using high range water-reducing super plasticizers are:

a) Speedy construction.
b) Increased workability and reduced segregation.
c) Longer placing time.
d) Improved pumpability.
e) Chloride free.
f) Safe for use in prestressed and marine structures.
g) Safe for use with sulphate resisting cement and marine aggregate.
h) Higher ultimate strength.
i) Improved workability.

### *Advantages of RMC*

1. Enhanced quality and durability resulting in lower maintenance costs and increased speed of construction.
2. Ready mix concrete is consistently of the same quality and provides a high quality of construction material; construction time is also reduced.

3. It reduces congestion at the site and prevents traffic jams.
4. It hastens infrastructure development and thus provides more employment opportunities.
5. It is an environmentally safer alternative.
6. With ready mixed concrete, modern construction techniques can be followed.
7. Convenience—Ready Mix Concrete is delivered at the site with minimum logistical hassles.
8. Different types of concretes can be made for different applications.
9. Use of RMC obviates the need to set up the infrastructure required for site manufactures of concrete. This also reduces the working capital to be invested by the customers, as they will not be required to maintain stock of aggregates, cement, plant and machinery etc.

## 20.16 SELF-COMPACTING CONCRETE

Self-Compacting concrete (SSC) first introduced in Japan is a very special type of concrete which can flow and fill into every corner of formwork, even in the presence of congested reinforcement, purely by means of its own weight and without the need of vibrating compaction, tamping etc. Self-Compacting concrete as it sounds is nothing different from normal concrete. It is just usage of extra admixtures (super plasticizers and viscosity modifying admixtures) and different amounts of composite materials that makes SSC act different to normal one. In SSC, high amount of supplementary cementitious materials, up to 70% of the total powder content, are added. Normally these supplementary materials are fly ash, silica flume, blast furnace slag etc. Since SSC does not require any compaction, it saves time, labour and energy. Also, good surface finish is produced.

Self-Compacting concrete is characterized by high powder content. The parameter that is important in SSC is water-powder ratio, water-cement ratio is completely ignored. Other important parameters are fly ash content, sand-aggregate ratio, paste percentage, types of admixture used. etc. The aggregate content in SSC is smaller than that for conventional concrete requiring vibration.

The degree of packing of coarse aggregate in SSC is approximately 50%. It is to reduce the interaction between coarse aggregate particles when the concrete deforms. The degree of packing of fine aggregate in SSC mortar is approximately 60% so that the shear deformability when the concrete deforms may be limited. On the other hand, the viscosity of the paste in SSC is highest among the various types of concrete due to is lowest water-powder ratio. This characteristic is important in inhibiting segregation.

The comparison of mix proportion between Self-Compacting concrete and normal conventional concrete is shown in Table 20.9.

**Table 20.9 Parameters and their values normally adopted**

| *Parameters* | *Normal Concrete* | *Self-Compacting Concrete* |
|---|---|---|
| Water-Powder ratio | 0.35–0.55 | 0.35.45 |
| Paste pecentage | Up to 0.35 | Up to 0.45 |
| Fly ash content | May or May not use | Used Up to 70% |
| Admixtures | Plasticizers/Super-Plasticizers | |

### *Self-Compactability of Fresh Concrete*

The method for achieving self-compactability involves not only high deformability of paste or mortar, but also resistance to segregation between coarse aggregate and mortar when the concrete flows through the confined zone of reinforcing bars. To achieve self-compactability, the aggregate content are limited, the water-powder ratio is kept low, and super plasticizers are used. The methods to achieve self-compactability are shown in Fig. 20. 8, and the influence of all these factors are as to follow.

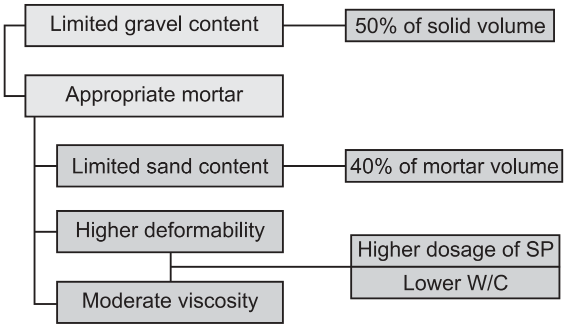

**Fig. 20.8 Methods for achieving Self-Compactability.**

The frequency of collision and contact between aggregate particles can increase as the relative distance between the particles decreases and then internal stress can increase when concrete is deformed, particularly near obstacles. The energy required for flowing is consumed by the increased internal stress, resulting in blockage of aggregate particles. Limiting the coarse aggregate content, whose energy consumption is particularly intense, to level lower than normal will be most effective in avoiding this kind of blockage.

Highly viscous paste is also required to avoid the blockage of coarse aggregate when concrete flows through obstacles (Fig. 20. 9). When concrete is deformed, paste with a high viscosity also prevents localized increase in internal stress due to the approach of coarse aggregate particles. High deformability can be achieved only by employment of super-plasticizer, keeping the water-powder ratio to a very low value.

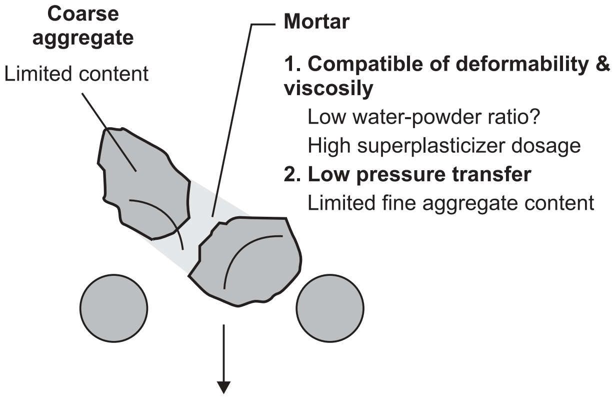

**Fig. 20.9 Mechanism for achieving Self-Compactability**

## Characteristics

**Non-Segregating:** The aggregate stay in suspension in the mix as it flows into the form.

**Non-Bleeding:** Water does not rise to the top of the mix or is observed on the outer edges of a flow test.

**Vibration:** No vibration is required during placement. SCC flows around rebar and other inclusions in the form under its own weight.

**Flow spread:** Flow spreads of 45 cm diameter or grater are obtainable.

**Set time:** The initial set time in many SCC mixes increase upwards of 90 minutes, depending on the admixtures used and water content of the mix.

**Workability:** Workability of Self-Compacting concrete is equilibrium of its fluidity, deformability and resistance to segregation and filling ability. This equilibrium has to be maintained for a sufficient time period to allow for its transportation, placing and finishing. For specific uses, for example Ready Mixed Concrete this time could be 90 minutes or more, if required, while for the precast concrete production, 30 minutes could be sufficient.

### Limitations

Self-Compacting concrete has been used as a "special concrete" only by large construction companies. In order for Self-Compacting concrete to be used as a standard concrete rather than a special one, new systems for its design, manufacturing and construction need to be established and standardized.

***Applications*** The main reason for the employment of Self-Compacting concrete are the shortened construction period, assured compaction in the structural elements; especially in confined zones where vibrating compaction is difficult and, to eliminate noise due to vibration; effective especially at products plants. Other applications of Self-Compacting concrete are bridge (anchorage, arch, beam, girder, tower, pier, joints between beam and girder); box culvert; building; concrete filled steel column; tunnel (lining, immersed tunnel, fill of tunnel); dam (concrete around structure); concrete products (block, culvert wall, water tank, slab, and segments); diaphragm wall; tank (side wall, joint between side wall and slab).

## 20.17 SHOTCRETE

Shotcrete is the concrete conveyed through a hose and pneumatically projected at a high velocity on a surface. It is similar to gunite (mortar) but with coarse aggregates. The normal specifications with respect to cement, aggregate and water also apply to shotcrete but the coarse aggregate used should be harder to account for attrition and of small size. The w/c ratio is kept quite low. The admixtures such as accelerators are used to permit quick setting of shotcrete. Consolidation of shotcrete is achieved by the impact of the high-velocity jet impinging on the surface.

Shotcrete can be made by dry-mix or wet-mix process, the former being more successful and generally used. In the dry-mix method the cement and aggregates are mixed dry, conveyed through a hose into a special nozzle by compressed air. Water is sprayed, inside the nozzle, under pressure and intimately mixed. Shotcrete is projected at high velocity on the surface to be gunited. In the wet process the mixing is done as for normal concrete. The maximum rate of deposition of shotcrete is $15 m^3/hr$ for the dry process but it can be more with the wet process. The high cost of shotcrete and the wastage due to rebound has to be weighed with other techniques before recommending it. It is also to be remembered that it is not eco friendly as lot of dusting problem and waste due to rebound is there.

***Properties*** The strength and other properties of shotcrete are same as that for high quality concrete. Normal shotcrete mixes are capable of strengths above 35 N/mm$^2$. Shotcrete is highly durable. Shrinkage and creep for wet shotcrete is likely to be high, but for dry-mix shotcrete shrinkage is low and creep similar to high quality concrete.The drying shrinkage usually falls with in the range of 0.06 to 0.10 per cent.

***Applications*** Shotcrete finds its applications in tunneling, repairing of old concrete and thin sections. Though costly, shotcrete requires shuttering and formwork only on one side resulting in economy and making it particularly suitable for thin sections. The fact that it can be conveyed over a considerable distance in a small diameter pipe makes shotcrete suitable for sites where access in difficult. However, it cannot be used in confined spaces as the expansion of compressed air causes turbulences, which make accurate placing difficult. Also the variable quality of the finished product, highly skilled personals and its cost are some of the main disadvantages limiting its application.

## 20.18 HIGH-PERFORMANCE CONCRETE

High-performance concrete (HPC) is relatively new technology. HPC originated in France in 1980, followed by Canada in 1990. In 1989, under the direction of paul Zia of North Carolina State University, a major effort in HPC technology began in the United States with the initiation of the Strategic Highway Research Program (SHRP). SHRP defined HPC in terms of strength, low w/c, and freeze/thaw durability. These early efforts were in response to alarming deterioration rates of the nation’s roads and bridges.

The concept of HPC has certainly evolved with time. What exactly is “high-performance?” Various parameters have been attached to HPC, with high strength being a popular descriptor. While equating HPC with high strength certainly has some merit, it doesn’t present a complete or, in some cases, accurate picture. Other properties of the concrete must also be considered, and may even override the strength issue. Three influences must be considered: the structure in which the concrete will be used, including support; the environment in which the structure will be placed; and the type and number of forces to which the structure will be subjected. These considerations are discussed in detail, before defining HPC.

### Structure

What are we building? A plain (unreinforced) floor slab-on-grade will require vastly different strength properties than a bridge deck; or a bridge structural member; or a slip-formed building or cooling tower. And yet, for each respective application, these greatly different strength ranges can certainly result in a HPC. Other concrete properties which the type of structure may dictate include allowable heat generation during curing; volume stability; creep; crack susceptibility/brittleness; bond to reinforcing; workability; pumpability; and the list goes on and on. Basically, the structural and construction requirements of the structure must be met by the concrete to be used.

### Environment

What environment conditions will the structure be exposed to? Under this factor consideration must be given to climatic conditions, *i.e.*, heating and cooling, wetting and drying, and freezing and thawing, and the requirements they place on the concrete. Further, potential chemical attack must also be considered for those structures in contact with the ground, exposed to chemicals in the air or exposed to chemicals because of the end use. In short, the concrete must be resistant to the environment in which it is placed. As with the structural requirements, the environmental requirements can vary widely: a concrete pavement built on a sulphate rich subgrade and subject to deicing chemicals in a freeze/thaw climatic zone will certainly have different requirements to achieve long term durability than a second story interior floor slab in a climatically controlled high rise building.

### Expected Loads

Depending on the breadth of the definitions, either structural or environmental considerations could easily include the loads to which a structure will be subjected. For buildings the engineer must consider loads, including those from wind or earthquakes. Marine structures present another set of conditions and requirements. The loads may be compressive, flexural or tensile, or include multiple types. In short, the type, magnitude and number of expected loads must be carefully considered.

### Other Factors

Beyond the three basic influences discussed above, additional factors must also be considered. First, no matter how good the potential of our mix design is for meeting the three influences, in order to be practical the concrete must be constructable. That is, while in the plastic state the concrete must be workable, pumpable (as required) and easily consolidated within the confines of any form-work or reinforcement. It must maintain this plasticity for the time period necessary to transport, place and consolidate the concrete. Any desired concrete properties, such as the entrained air void system, must not be adversely affected during transportation, placement or consolidation. A wide range of specific materials requirements may be placed on the mix components, depending on the environmental exposure and type of structure in which the concrete is placed, and the concrete must meet these requirements while still remaining construction-friendly.

Secondly, good practices must be followed during construction. The base or form-work must be well prepared: adequate coverage must be provided for reinforcement: placement techniques must be such as to avoid segregation of the concrete components; consolidation techniques must be adequate to attain target densities, but not so great as to adversely affect the air void system or produce segregation; and finishing and curing techniques must be properly timed and adequate for environmental conditions.

Thirdly, the interaction of the concrete at an early age with the environment and any loads must be considered. Heat generated during hydration must be estimated and combined with the effects of expected environmental conditions. Hot weather concreting requires special considerations, and changes in mix proportions may become necessary to prevent excessive internal temperatures, thermal gradients and thermal stresses. Similar concerns must be addressed for cold weather, or where large swings in ambient temperature are expected in short periods of time. These factors, and others which may influence the maturity of the concrete, must be considered when determining the allowable load for the concrete at any given age. The load may be (for instance) construction traffic, for pavements, or the mass of movable form-work in the case of some structures. Without paying attention to these and other factors during the early life of the concrete, damage may occur which will prevent the concrete from attaining the design properties or design life which were intended.

## Definition

High performance concrete is defined as concrete which meets special performance and uniformity requirements that cannot always be achieved routinely by using only conventional materials and normal mixing, placing, and curing practices. The requirements may involve enhancements of characteristics such as placement and compaction without segregation, long-term mechanical properties, high early-age strength, toughness, volume stability, durability service life (greater than 75 years) in severe environments, flow ability and self-leveling capability, or low heat of hydration. Often a higher modulus of elasticity, not compressive strength, is the controlling requirement in HPC construction.

A high-strength concrete is always a high-performance concrete, but a high-performance concrete is not always a high-strength concrete. A high-strength concrete has a specified compressive strength for design of 40 MPa or greater. The specification of high-strength concrete generally results in a true performance specification in which the performance is specified for the intended application, and the performance can be measured using a well-accepted standard test procedure. The same is not always true for a concrete whose primary requirement is durability.

Durable concrete specifying a high-strength concrete does not ensure that a durable concrete will be achieved. In addition to requiring a minimum strength, concrete that needs to be durable must have other characteristics specified to ensure durability. In the past, durable concrete was obtained by specifying air content, minimum cement content and maximum water-cement ratio. Today, performance characteristics may include permeability, deicer scaling resistance, freeze-thaw resistance, abrasion resistance or any combination of these characteristics. Given that the required durability characteristics are more difficult to define than strength characteristics, specifications often use a combination of performance and prescriptive requirements, such as permeability and a maximum water-cement ratio to achieve a durable concrete. The end result may be a high-strength concrete, but this only comes as a by-product of requiring a durable concrete.

## Materials

Most high-performance concretes produced today contain materials in addition to portland cement to help achieve the compressive strength or durability performance. These materials include fly ash, silica fume and ground-granulated blast furnace slag used separately or in combination. These cementitious materials can exceed 25% of the total cement by weight. Typical HPC today can include 5% to 15% silica fume, 50% to 65% slag cement (as much as 80% in mass concrete), and up to 50% fly ash. Silica fume contributes to strength and durability; fly ash and slag cement result in better finishability, decreased permeability, and increased resistance to chemical attack. HPC mixtures are often proportioned to achieve low permeability. Lower concrete permeability provides corrosion resistance for reinforcing steel by reducing the rate of chloride ion migration into the concrete. Slag cement improves the workability, placeability, and consolidation of concrete, resulting in better finishing.

Coarse aggregates in HPC occupy 35–70% of the volume of concrete, their properties influence the properties of hardened concrete significantly. Usually an aggregate with specific gravity more than 2.55 and water absorption less than 1.5% (except for light weight aggregates) is desirable.

Chemical admixtures such as high-range water-reducers are needed to ensure that the concrete is easy to transport, place and finish. Retarding admixtures are used to check the early setting problems. For high-strength concretes, a combination of mineral and chemical admixtures is nearly always essential to ensure achievement of the required strength. Typically, high-range water-reducing admixtures are used. Concrete for bridge decks typically include water-reducing admixtures. Natural wood resins and sulphonated compounds are used for air entrainment.

Most high-performance concretes have a high cement content and a water-cement material ratio of 0.40 or less. However, the proportions of the individual constituents vary depending on local preferences and local materials. Mix proportions developed in one part of the country do not necessarily work in a different location. Many trial batches are usually necessary before a successful mix is developed.

High-performance concretes are also more sensitive to changes in constituent material properties than conventional concretes. Because many characteristics of high-performance concrete are interrelated, a change in one usually results in changes in one or more of the other characteristics. Consequently, if several characteristics have to be taken into account in producing a concrete for the intended application, each must be clearly specified. Variations in the chemical and physical properties of the cementitious materials and chemical admixtures need to be carefully monitored. Substitutions of alternate materials can result in changes in the performance characteristics that may not be acceptable for high-performance concrete. This means that a greater degree of quality control is required for the successful production of high-performance concrete.

### Examples

Some of the examples of HPC are: High workability concrete, Self compacting concrete (SCC), Foamed concrete, High strength concrete, Lightweight concrete, No-fines concrete, Pumped concrete, Sprayed concrete, Waterproof concrete, Autoclaved aerated concrete, Roller compacted concrete.

## 20.19 BACTERIAL CONCRETE

Cracks in concrete are inevitable and are one of the inherent weaknesses of concrete. Water and other salts seep through these cracks, corrosion initiates, and thus reduces the life of concrete. So there was a need to develop an inherent biomaterial, a self-repairing material which can remediate the cracks and fissures in concrete. Bacterial concrete is a material, which can successfully remediate cracks in concrete. It has been found that use of bacteria improves the stiffness and compressive strength of concrete.

The “Bacterial Concrete” can be made by embedding bacteria in the concrete that are able to constantly precipitate calcite. Bacillus Pasteurii and sporosorcina, a common soil bacterium, can continuously precipitate a new highly impermeable calcite layer over the surface of an already existing concrete layer. The favorable conditions do not directly exist in a concrete but have to be created for the bacteria not only to survive in the concrete but also to feel happy and produce as much calcite as needed to repair cracks.

## EXERCISES

1. Write short notes on:
   (a) Oil-well cement (b) Acid resistant cement
   (c) Expanding cements (d) Ferrocement
2. (a) What is ready mixed concrete? How is it manufactured and transported?
   (b) What are the salient features of ready mixed concrete?
   (c) State the advantages and disadvantages of ready mixed concrete.
3. Write notes on:
   (a) Ferrocement (b) Fibre reinforced concrete
   (c) Light weight concrete (d) Heavy weight concrete
4. Give the characteristics and uses of the following concretes:
   (a) Roller compacted concrete (b) Polymer concrete
   (c) Cellular concrete (d) Shrinkage compensating concrete
5. Give the uses and applications of following concretes.
   (a) High strength concrete (b) Foam concrete
   (c) Prestressed concrete (d) Reinforced cement concrete
6. Describe in details about the ready mixed concrete.
7. What is shotcrete?
8. High performance concrete can be a high strength concrete but the converse is not true, comment.
9. What makes high performance concrete different from high strength concrete?
10. Write notes on:
    (a) High performance concrete (b) Accreted concrete
    (c) Bacterial concrete (d) Self-Compacting concrete
11. Write short notes on
    (a) Light weight concrete (b) Fibre-reinforced concrete
    (c) Ferrocement (d) Air entrained concrete

## OBJECTIVE TYPE QUESTIONS

1. In prestressed concerete concrete of high strength is used.
   Consider the following statements:
   1. It results in smaller cross-section
   2. Bearing stresses are generated in anchorage zones
   3. Shrinkage cracks are reduced

   Of the above the correct statements are:
   (a) 1 and 2 (b) 2 and 3
   (c) 3 and 1 (d) 1, 2 and 3
2. The ultimate tensile strength of high tensile strength steel is about
   (a) 250 $N/mm^2$ (b) 450 $N/mm^2$
   (c) 515 $N/mm^2$ (d) 2000 $N/mm^2$
3. Which of the following is not modified for betterment in polymer concrete?
   (a) Bond (b) Strength
   (c) Oil resistance (d) Brittleness

4. The commercially successful fibres in fibre reinforced concrete are of
   (a) asbestos (b) glass
   (c) steel (d) carbon
5. The pull out resistance of fibres in fibre reinforced concrete does not depend upon
   (a) number of fibres crossing the crack
   (b) length of fibres
   (c) diameter of fibres
   (d) tensile strength of fibres
6. The thickness of ferrocement may be
   (a) 20 mm (b) 50 mm
   (c) 75 mm (d) 100 mm
7. No fines concrete is
   (a) light weight concrete (b) heavy weight concrete
   (c) fibre reinforced concrete (d) ferrocement
8. Which of the following is not a light weight concrete
   (a) No fines concrete (b) Cellular concrete
   (c) Foam concrete (d) Prestressed concrete
9. Concrete recommended for radiation shielding is
   (a) light weight concrete (b) heavy weight concrete
   (c) fibre reinforced concrete (d) ready mixed concrete
10. Which one of the following types of concrete is most suitable in extreme cold climates?
    (a) Air-entrained (b) Ready mix concrete
    (c) Vacuum concrete (d) Heavy weight concrete
11. Bacterial concrete is one that
    (a) is affected by bacteria
    (b) is placed in marine conditions
    (c) is used in polluted environment
    (d) has auto crack healing capacity
12. Self-compacting concrete is characterized by
    (a) high powder component
    (b) high water-powder ratio
    (c) cementitious materials up to 30%.
    (d) rough surface finish.

## Answer Table

1. (d) 2. (d) 3. (d) 4. (a) 5. (d) 6. (a) 7. (c) 8. (d) 9. (b) 10. (a)
11. (d) 12. (a)

# 21

# Miscellaneous Materials

- Adhesives
- Asbestos
- Linoleum
- Thermocol
- Heat Insulating Materials
- Sound Insulating Materials
- Water Proofing Materials
- Fiber
- Geosynthetics
- Sand Lime Brick
- Smart Materials
- Composite Materials

## 21.1 ADHESIVES

Adhesives are natural or synthetic binders used for surface coatings. Natural binders like plant juices, glues, etc. have been in use since prehistoric age but have gradually lost their social acceptance and have been replaced by synthetic binders derived from plant minerals or mineral oil. These may be applied hot, or as an emulsion, or with a solvent. High load bearing adhesives have been developed for engineering applications. Structural adhesives are based on specially cured rubber-toughened epoxies, acrylics and silanes. Silane resins are used to prevent moisture penetration.

### *Advantages*

Adhesives have an advantage over rivets and bolts by distributing stress over larger areas of a joint. This reduces galvanic corrosion between dissimilar metals and provides the ability to cement together extremely thin sheets. The process of bonding with adhesives is economical.

### *Disadvantages*

Adhesives lose stability at high temperatures and the resistance to peeling is poor. Special care is to be exercised in their application. They take lot of time to form the bond.

### Properties

Adhesives should have high tensile strength. The important physical properties of adhesives are cohesive strength, adherence, fluidity, and wettability of the substrate.

***Cohesive Strength*** Adhesive should have more cohesive strength than either of the surfaces being held together. Usually the adhesive becomes more brittle as its cohesive strength is increased.

***Adherence*** For an adhesive to hold two surfaces together the former should form a strong bond at each of the interfaces between the surface and the adhesive, and the adhesive must have strong cohesive strength. Since adhesive failure occurs in the weakest bond, failure can occur at either interface, as also for cohesive failure. Failure may also occur inside the adhesive itself. In practice the bond failure at the interface is rare. Regardless of the quality of the adhesive clean surfaces are necessary to get the best results.

***Fluidity*** When the liquids are stirred, they become temporarily more fluid because of alignment of their tiny crystals. The fluid thickens as soon as stirring is stopped. This property, called thixotropy of adhesives and paints helps to prevent a sag or run when these coatings are applied on vertical surfaces. If the viscosity of a liquid increases with the shear stress of stirring, it is called *dilatency*. Since the viscosity decreases with increase in temperature, an adhesive should be applied while hot.

***Wettability*** Adhesive must wet the surface thoroughly as it spreads. It must be able to flow into the surface crevices displacing dirt, moisture, and trapped air. For this purpose the surface tension of adhesive can be lowered by adding a surfactant wetting agent.

### Types of Adhesives

Following are the types of adhesives in use.

***Organic Solvent Thinned Adhesives*** are applied to each of the two surfaces and the solvent is allowed to escape before the two surfaces are put together. Solvents are classified as active and nonpolar, *e.g.*, ethyl acetate, methyl ketone, and poor and polar such as aliphatic paint thinner.

***Latex Adhesives*** are natural or synthetic rubber or vinyl copolymers. These water-dispersed or latex adhesives contain, elastomeric film former, emulsifiers, thickeners, and antifoaming agents. The examples of synthetic rubber-based adhesives are styrene butadiene and neoprene.

***Water-dispersed Adhesives*** depend on natural materials for bonding. The bond of these can be destroyed by soaking in water. The examples are glue made by hydrolysis of collagen extracted from skin and bones of fish and animals. Natural adhesives are casein and soybean used in wood working industry. Dextrin adhesives are made from starch for use with paper products.

***Two-package Adhesives*** In this type of adhesive solvent is not required. The examples are epoxy adhesives. These are made by using a low-molecular-weight partially polymerised polymer.

## 21.2 ASBESTOS

Asbestos occurs in nature mostly in form of veins among rock of specific composition. Asbestos minerals are fibrous in structure and split into fine fibres under mechanical force. Natural asbestos may be subdivided into two groups: acid-resistant and non-acid-resistant.

Acid-resistant asbestos comprises crocidolite asbestos, anthophyllite asbestos, amosite asbestos, actinolite asbestos and tremolite asbestos. The group of non-acid-resistant asbestos is represented by chrysotile asbestos only, which is of great industrial importance. In chemical composition chrysotile asbestos (theoretical) is a magnesium hydrosilicate $3MgO.2SiO_2.\ 2H_2O$.

Asbestos molecules are strongly bound together only in one direction, whereas the lateral bond with adjacent molecules is quite weak. This property explains the very high tensile strength of asbestos along the fibres and its good fluffing ability and ready transversal (across the fibres) splitting. Diameter of chrysotile-asbestos fibres lies between 0.00001 to 0.000003 mm, but in practice chrysotile-asbestos can be fluffed to fibres of a mean diameter of 0.02 mm, and, therefore, such a fibre is actually a bunch of numerous elementary fibres. On the average, the tensile strength of asbestos fibres is 3000 $N/mm^2$, but since the fibres are subjected to compression, impact and other types of action in the process of fluffing, their strength drops to 600–800 $N/mm^2$ which corresponds to the strength of high-quality steel wire.

Asbestos has a good absorption capacity. When mixed with Portland cement and wetted by water, it absorbs, *i.e.*, retains firmly on its surface, the products of cement hydration, which bind the asbestos fibres, and, therefore, asbestos-cement can be considered a finely reinforced cement stone. Chrysotile-asbestos is incombustible, however, at about 110°C it begins to lose absorption water and its tensile strength drops by 10 %; at 368°C all of the absorption water evaporates and asbestos strength decreases by 25–30%. However, after asbestos is cooled, it readsorbs from the air the moisture it has previously lost and regains its original properties. When asbestos is heated to over 550°C, chemically bound water is removed, asbestos loses elasticity and strength, becomes brittle and fails to restore its properties on cooling. Chrysotile-asbestos melts at a temperature of about 1550°C.

Asbestos has low heat and electric conductivity, high resistance to alkali and poor resistance to acids. The quality of asbestos-cement items depends greatly on that of asbestos and on fineness of cement.

***Uses*** Asbestos is used to make sheets (A.C. sheets) and boards for roofing, false-ceilings, paneling, partitions, wall linings, door panels, window panes, sign boards, wardrobes, etc. In the form of pipes it is used to drain rain water, soil water, etc. It is also used for making paints.

## 21.3 LINOLEUM

It is a plastic material obtained by oxidizing linseed oil into a rubber like substance mixed with ground cork, wood flour and pigments. The resulting material is pressed upon a backing of burlap.

Linoleum is classified as plain, printed and inlaid. It is available in the form of tiles and rolls. The plain linoleum of a uniform colour is available in thickness 2–4.5 mm. The printed linoleum has a pattern printed on it in oil paints. Its thickness ranges from 1.25–2 mm. The inlaid linoleum has small units of linoleum in different colours and shapes patterned and pressed on a burlap back.

### Properties

Linoleum floors are durable, resilient, quiet and comfortable. They are cheap easy to install and maintain.

***Uses*** This is most suitable decorative floor covering for wood and concrete floors.

## 21.4 THERMOCOL

Thermocol is a light and cellular plastic material used for sound and heat insulation of ceiling, walls, refrigerators and for air conditioning of the buildings.

It is soft, light, strong and durable having compressive strength in the range of 11.7 to 14.4 $N/mm^2$. It has excellent heat, sound and electric insulating properties.

## 21.5 HEAT INSULATING MATERIALS

The purpose of thermal insulation is to restrict the heat transfer from warmer to cooler areas.

The commonly used heat insulating materials work on principle of either air spaces formed between structural components, surface insulation or internal insulation. Well known products are aerated concrete, gypsum boards, fibre boards, asbestos cement boards, chip boards, cork boards, foam plastic, aluminium foil, reflecting paints, expanded blast furnance slag, vermiculite*, fibre glass, glass wool, etc. Cavity wall, though costly, provides good insulation.

### Properties

Heat insulating material should be impermeable to water, fire proof, resists insect attacks, have low thermal conductivity (0.0228 $kCals\text{–}cm/m^{2}{}^\circ C$). Since a good heat insulating material has porous structure the strength is lowered affecting its stability.

## 21.6 SOUND INSULATING MATERIALS

A well designed building should incorporate sound insulation to restrain noise level. High noise conditions results in uncomfortable living conditions, mental strain, fatigue and may even lead to nervous break down or temporary deafness. Adequate insulation can be achieved by using sound absorbing or sound repellent materials.

The commonly used sound insulating materials are cellular concrete, asbestos, rock wool, glass wool, glass silk, mineral wool boards, cane fibre and porous tiles. Acoustic plastics such as gypsum plaster is very effective in sound insulation.

### Properties

A good sound insulator should have low density, porous texture, resistance to moisture and pleasing look. It should be incombustible, light in weight and easy to handle and fix, resistant to attacks of vermins, insects, termite and dry hot.

## 21.7 WATER PROOFING MATERIALS

Dampness in a building is the main cause of the deterioration of the building as well as for the ill-health of the occupants. The main cause of dampness is the absorption of water by the materials because of high ground water table, rain, exposed top of parapet walls, inadequate slope of roof, pounding of water in adjoining areas of the structure and condensation. The

---

*** Vermiculite is the geological name given to a group of hydrated, laminar materials which are aluminium-iron-magnesium silicates and resemble mica in appearance. When subjected to temperature of 700–1000°C, it expands to many times its volume.**

damp-proofing of a building is done by interposing a layer of damp-proofing material between source of dampness and building and this layer is known as *damp-proofing course* (D.P.C.). The principle of damp-proofing is to provide D.P.C. horizontally or vertically without any break and thought the thickness of wall.

A good water-proofing material should be impervious, durable and should be able to resist loads to which it will be subjected. It should be in position to accommodate some structural movement without fracture. The materials commonly used to check dampness can be divided into the following four categories:

1. *Flexible materials* the examples are bitumen felts, plastic sheeting (Polythene sheet) etc.
2. *Semi-rigid materials* the examples are mastic asphalt or a combination of materials or layers.
3. *Rigid materials* the examples are first class bricks, stones, slates, cement concrete etc.
4. *Grout* consists of cement slurry and acrylic based chemicals / polymers.

The choice of a material to function as an effective damp-proof course requires a judicious selection. It depends upon the climatic and atmospheric conditions, nature of structure and the situation where D.P.C. is to be provided.

## 21.8 FIBER

Fiber is a class of materials that are continuous filaments or are discrete elongated pieces, similar to lengths of thread. Fibers are of great importance in the biology of both plants and animals, for holding tissues together. Fibers used by man can be classified as follows.

**Natural fibers** include those produced by plants, animals, and geological processes. They can be classified according to their origin and are described as follows:

Vegetable fibers are generally based on arrangements of cellulose, often with lignin: examples include cotton, linen, hemp jute, flax, ramie, and sisal. Plant fibers serve in the manufacture of paper and cloth.

Wood fiber, distinguished from vegetable fiber, is from tree sources. Forms include groundwood, thermomechanical pulp (TMP) and bleached or unbleached kraft or sulfite pulps. Kraft and sulfite, also called sulphite, refer to the type of pulping process used to remove the lignin bonding the original wood structure, thus freeing the fibers.

Animal fibers consist largely of particular proteins. Instances are spider silk, sinew, catgut and hair (including wool). Polar bear fibers are noted for being hollow.

Mineral fibers comprise asbestos. Asbestos is the only naturally occurring long mineral fiber. Short, fiber-like minerals include wollastinite, attapulgite and halloysite.

**Man-made fibers** may be from natural raw materials or from synthetic chemicals.

Many types of fiber are manufactured from natural cellulose, including rayon, modal, and the more recently developed Lyocell. Cellulose-based fibers are of two types, regenerated or pure cellulose such as from the cupro-ammonium process and modified or derivitized cellulose such as the cellulose acetates. Fiberglass made from specific glass formulas and optical fiber made from purified natural quartz, are also man-made fibers that come from natural raw materials. Metallic fibers can be drawn from ductile metals such as copper, gold or silver and extruded or deposited from more brittle ones such as nickel, aluminum or iron.

Synthetic fibers are a subset of man-made fibers, which are based on synthetic chemicals (often from petrochemical sources) rather than arising from natural materials by a purely physical process. Such fibers are made from polyamide nylon, PET or PBT polyester, phenol-formaldehyde (PF), polyvinyl alcohol fiber (PVOH), polyvinyl chloride fiber (PVC), polyolefins (PP and PE), or acrylic polymers, although pure polyacrylonitrile PAN fibers are used to make carbon fiber by roasting them in a low oxygen environment.

Traditional acrylic fiber is used more often as a synthetic replacement for wool. Carbon fibers and PF fibers are noted as two resin-based fibers that are not thermoplastic, most others can be melted. Aromatic nylons such as Kevlar and Nomex thermally degrade at high temperatures and do not melt. More exotic fibers have strong bonding between polymer chains (*e.g.* aramids), or extremely long chains (*e.g.* Dyneema or Spectra). Elastomers can even be used. *e.g.* spandex although urethane fibers are starting to replace spandex technology.

Coextruded fibers have two distinct polymers forming the fiber, usually as a core-sheath or side-by-side. Coated fibers exist such as nickel-coated to provide static elimination, silver-coated to provide anti-bacterial properties and aluminum-coated to provide radar chaff. Radar chaff is actually a spool of continuous glass tow that has been aluminum coated. An aircraft-mounted high speed cutter chops it up as it spews from a moving aircraft to foil radar signals.

Micro fibers in textiles refer to sub-denier fiber (such as polyester drawn to 0.5 dn). Denier and Detex are two measurements of fiber yield based on weight and length. Microfibers in technical fibers refer to ultrafine fibers (glass or meltblown thermoplastics) often used in filtration. Newer fiber designs include extruding fiber that splits into multiple finer fibers. Most synthetic fibers are round in cross-section, but special designs can be hollow, oval, star-shaped or trilobal. The latter design provides more optically reflective properties. Synthetic textile fibers are often crimped to provide bulk in a woven, nonwoven or knitted stucture. Fiber surfaces can also be dull or bright. Dull surfaces reflect more light while bright tends to transmit light and make the fiber more transparent.

Very short and /or irregular fibers have been called fibrils. Natural cellulose, such as cotton or bleached kraft show smaller fibrils jutting out and away from the main fiber structure.

Uses of fibers are diverse. They can be spun into filaments, thread, string or rope. They can be used as a component of composite materials. They can also be matted into sheets to make products such as paper or felt. Fibers are often used in the manufacture of other materials.

## 21.9 GEOSYNTHETICS

Geosynthetics are made of polypropylene, nylon, PVC and other synthetic materials. These are being used for a variety of innovating usage in civil engineering construction works (Table 21.1). Some of the popular usages are for reinforcement, separation, drainage, filtration and moisture barrier, seepage control, foundations and pavements. The success and increasing popularity of geosynthetic application in various civil engineering works can he attributed to a number of advantages associated with its usage, some of which are:

**Table 21.1 Functions of Fabrics in Various Civil Engineering Applications**

| | *Function* | | | |
|---|---|---|---|---|
| *Application* | *Separation* | *Filtration* | *Drainage in the plane* | *Reinforcement* |
| Roads, Railways and Area sub-grade stabilization | ░ | | | ▓ |
| Drainage | ▓ | ░ | | |
| Wet fill enbankments | ▓ | ░ | ░ | ▓ |
| Coastal and river protection | ░ | ░ | | ▓ |
| Land reclamation | ▓ | | | ▓ |
| Asphalt reinforcement | | | | ░ |
| Earth reinforcement | | | | ░ |

| Dominant function | Secondary function | Not important |
|---|---|---|
| ░ | ▓ | ☐ |

1. They can be good replacement for scarce and costly conventional construction materials like cement and steel for several types of applications.
2. They may be very useful, or perhaps the only alternative, at some of the poor site conditions.
3. They can be used and installed rapidly and have proved economical in mass usage.
4. Compared to other reinforcing materials (*e.g.* steel) they are better resistant to atmospheric weathering action.
5. They have added advantage of being useful in environment protection works.

Geosynthetics have been classified as Geotextiles, Geogrids, Geomembranes and Geocomposites.

***Geotextiles*** are any permeable textile material used with foundation, soil, rock, earth or any geotechnical engineering related material, as an integral part of man-made project, structure or system. These are generally synthetic polymeric materials and consist of either woven or non-woven fabrics and are generally used for separation, drainage, filtration and reinforcement.

***Geogrids*** are relatively stiff materials with large apertures of sufficient size (10 to 50 mm) to allow interlocking with surrounding soil, rock, earth or any other geotechnical material. They are also characterised by high dimensional stability and tensile modulus at very low elongation. Because of the large openings, they cannot be used in filtration and as moisture barriers but are quite useful for the purpose of separation and reinforcement. They can be used in road pavements, or in improvement of bearing capacity.

***Geomembranes*** are a continuous membrane type linen and barrier composed of asphaltic, polymeric or a combination There of materials with sufficiently low permeability so as to control fluid migration in a geotechnical engineering-related man made project, structure or system.

***Geocomposites*** consist of combinations of geotexites, geogrids, geomembranes and / or other materials. In geocomposites best features of different types of geosynthetics are incorporated in such a way that the joint action of the materials provide optimal performance in a particular situation.

## Applications

***Subgrade Stabilization*** A geosynthetic can improve the load carrying capability and reduce rutting when constructing roads over weak soils. The geosynthetic provides a separation barrier to prevent fill from punching into the subgrade under construction traffic, as shown in Fig. 21.1. The subgrade can develop its full bearing capacity and the fill can better distribute the loads from traffic. The geosynthetic may also provide filtration and drainage functions if required.

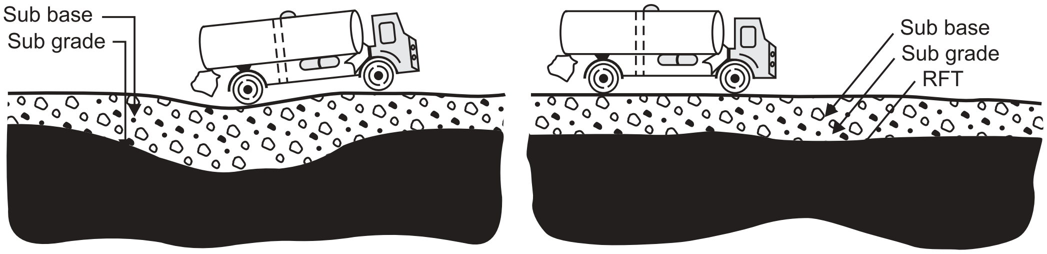

Road surface deformation caused by penetration

Stabilised road construction

**Fig. 21.1 Geosynthetic in Pavements**

Geosynthetic used under railway track, as shown in Fig. 21.2 may provide for additional roadbed filtration, lateral permeability strength and modulus improvement, and separation of subgrade and ballast.

***Asphalt Overlay*** When installed between the old and new asphalt layers, a geotextile helps retard reflective cracking and improve the overlay service life. The geotextile absorbs the tack coat sprayed on the surface of the old pavement, formulating a permanent moisture barrier. This barrier created by the geosynthetic protects the subgrade from water intrusion and subgrade strength loss. Pavment service life is extended, maintenance costs are reduced, and costly resurfacing is postponed considerably, when compared to conventional repaving techniques.

The pavment overlay fabric or geogrid-asphalt system illustrated in Fig. 21.3 also retards reflective crack development in the overlay by providing flexible stress relieving layer between the pavement and overlay.

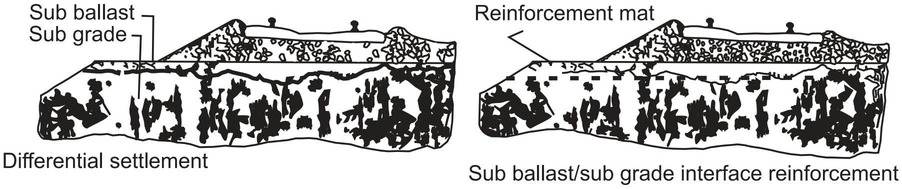

**Fig. 21.2 Geosynthetics in Rail Beds**

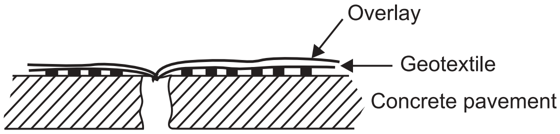

**Fig. 21.3 Interface Protection**

***Reinforced Embankments Over Soft Soils*** If the foundation soils underlying the embankment are too weak to permit the construction of an embankment to the required height, then geosynthetic-reinfored embankments (Fig. 21.4) can provide considerable savings over conventional construction method including soil displacement and stabilizing berms. Both geotextiles and / or geogrids can serve this function.

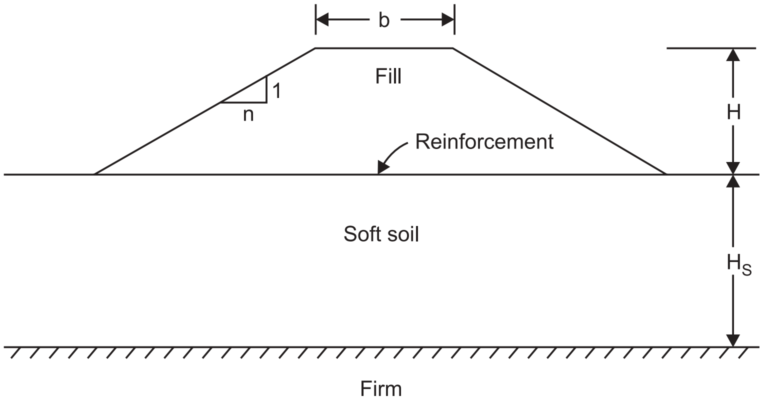

**Fig. 21.4 Rainforced Embankment on Soft Soil**

***Steep Slope Rainforcement*** In highway construction, roads may be widened without increasing necessary right-of-way by replacing a conventional flat slope with a steep reinforced one. This allows for more efficient land use. In private developments, the amount of useable land within a given area is increased without the cost of a traditional retaining wall. Figure 21.5 illustrates typical uses.

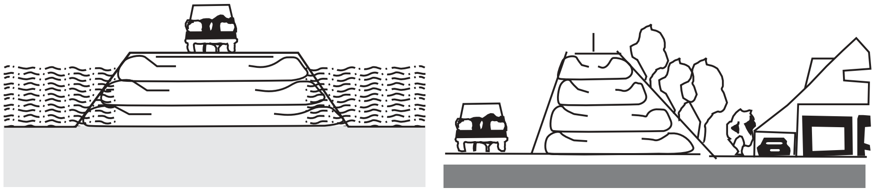

Fig. 21.5 Geotextile Reinforced Steep Slopes

***Geosynthetic Reinforced-Retaining Walls*** Geotextiles and geogrids in internally reinforced soil walls allow reinforcement of the soil mass, creating a stable fill area behind the wall face. Such a structure shown in Fig. 21.6 is an alternative to conventional gravity or cantilever retaining walls used in many civil engineering structures. These have been found to be quite economical in forest and hilly area.

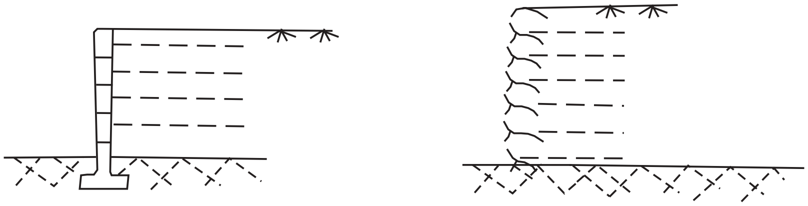

Fig. 21.6 Geotextile Reinforced Retaining Walls

***Erosion Control/Truf Reinforcement*** Three-dimensional erosion control mats are used to establish a reinforced truf in ditches, channels and slopes. The mats entangles with the root and stem network of vegetation to greatly enhance its resistance to flow velocity. Top soil cover may be used to enhance temporary erosion protection and early vegetative growth.

***Erosion Control Under Rip-Rap (Armour)*** To prevent the erosion of soil through the armouring layer of rip-rip, Geotextiles are used as an interface The geotextile is in lieu of a conventional graded aggregate filter. In this application, large armour stone or rip-nip, or in some cases flexible concrete mattresses, are placed to protect the soil against erosion and wave attack. The use of a geotextile in such situation has been shown to provide substantial savings over conventional aggregate filter systems with far greater control during construction, particularly in underwater applications.

***Erosion Control—Fabric-Forming Mats*** A cost effective alternative to stone rip-rap could be a concrete forming system. The mats are typically constructed of water permeable, double-layer woven fabric. The fabrics are positioned on the area to be protected, where they are filled with a pumped structural grout.

***Subsurface Drainage*** Geotextiles are used in subsurface drainage systems as a permeable separator to keep soil out of the drainage media, but permit water to pass freely. Such systems are needed under highways, parking lots, shorelines, walls, athletic fields, golf courses, race tracks, lawns and other areas, typically shown in Fig. 21.7.

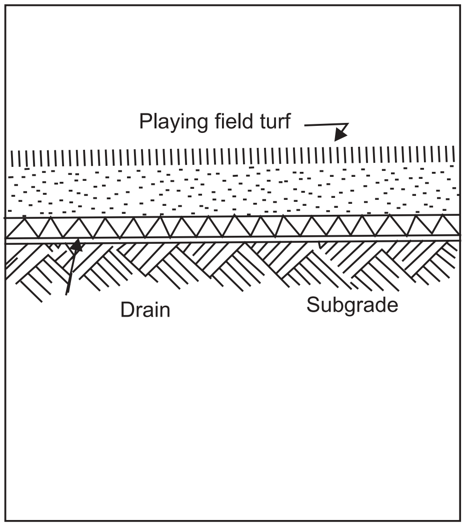

**Fig. 21.7 Subsurface Drainage Applications**

***Geomembrane Protection*** Geotextiles may be placed on one or both sides of the geomemebres (Synthetic liner) to protect it from installation and design stresses. Such lining systems are gaining popularity in hazardous and non-hazardous waste landfills. They replace conventional sand/clay protective layers. Geotextiles are also commonly used in leachate collection and detection systems in waste disposal facilities. They function as fluid transmission and/or relief layers.

## 21.10 SAND LIME BRICK (IS:4139)

Sand-lime bricks can be used as a substitute for clay bricks. They are prepared where suitable clay for the manufacture of bricks is not available. They are also used for ornamental works. These bricks are in very wide use in Russia and West Germany. In India these bricks have not gained much ground although, some structures have been made in Kerala state using sand-lime bricks.

Sand-lime bricks are made from a lean mixture of slaked lime and fine siliceous sand, moulded under mechanical pressure and hardened under steam pressure. Constituents of these bricks are sand, lime, water and colouring pigment. They consist of 88 of 92% of sand, 8 to 12% of lime and 0.2 to 0.3% pigment. Water containing soluble salts or organic matter more than 0.25%, should not be used in the manufacture of these bricks. Sea water is totally unfit.

**Manufacture** The sand should be free from clay or mica. It should all pass a 20 mesh and three-fourths of it should be retained on 100-mesh. If the grains run larger than a 20-mesh, the coarse particles must be screened out or reduced in a tube mill. A high-calcium lime is preferred to a brown or dolomitic lime owing to the rapidity with which the high-calcium lime hardens. The requisite percentage of lime varies between 4 to 10 per cent. Generally the lime is slaked before mixing with the sand by placing it beneath the brick cars in the hardening cylinder and allowing the steam to act upon it. Often the sand and lime are mixed dry in a tube mill and the mixture is then tempered in a special type of pug mill. In some plants the quick lime is slaked and an intimate mixture secured by running the wet sand and lime through a wet and dry grinding mill, an apparatus similar to a dry pan. Sand, lime and pigment are taken in appropriate proportion and mixed with 3% to 5% of water, so that the mixture acquires a state of semi-dry condition. The material is then moulded in form of bricks. Moulding is done in powerful presses, some of which can exert a compression of 30 to 60 $N/mm^2$ on the surface of the brick. After removal from the press the bricks are stacked on cars which are run into the hardening cylinders. The bricks thus prepared do not require any drying. The prepared bricks are directly fed into an autoclave and subjected to a saturated steam pressure of about 8 to 16 $kg/cm^2$. This pressure is maintained for 6 to 12 hours. During, autoclaveing operation, interaction between lime and sand takes place and both combine chemically. The bricks are now removed from the autoclave and sent for use. These bricks do not require burning as well as drying. The process of subjecting these bricks to a saturated steam pressure is known as autoclaving or hydro-thermal treatment.

**Dimensions** The size of sand-lime brick should be 190 × 90 × 90 and 190 × 90 × 90 mm. The tolerance of length is limited to 3 mm and that of breadth and height to 2 mm.

### *Advantages*

1. They are quite hard and strong.
2. They are uniform in colour and texture.
3. The raw materials used do not contain any soluble salts and these bricks are free from efflorescence.
4. Being very uniform in size, their masonry work requires a very thin layer of plaster.
5. These bricks present such a pleasing appearance, that plastering may be avoided.

### *Disadvantages*

1. They are unsuitable for furnaces since they disintegrate, when subjected to prolonged hot conditions.
2. They are very weak against abrasive action and hence cannot be used for pavings.
3. Being less resistant against water, they are found unsuitable for use in foundations.

## Physical Properties

Good sand-lime bricks bedded flatwise have a compressive strength between 7.5 to 20 $N/mm^2$ (Table 21.2). The compressive strength of any individual brick should not fall below the minimum average compressive strength specified for the corresponding class of brick by more than 20 per cent. In cross bending the modulus of rupture should exceed 1$N/mm^2$. After boiling 5 hours good brick should not show more than 18 per cent absorption. The bulk specific gravity commonly lies between 1.8 and 2.0. The average drying shrinkage should not be greater than that given in Table 21.3.

## Comparison of clay and sand-lime bricks

On account of their smooth surfaces, even shape, free form efflorescence, uniform colour and satisfactory strength, sand-lime bricks are sometimes preferred to clay bricks. Some of the sand-lime bricks, however, have not been as durable when exposed to the weather as good grades of clay brick. Unless made with great care sand-lime bricks do not resist frost action.

**Table 21.2 Average Compressive Strength ($N/mm^2$) of Sand-lime Bricks**

| *Class* | *Not les than* | *Less than* |
|---|---|---|
| 7.5 | 7.5 | 10 |
| 10 | 10 | 15 |
| 15 | 15 | 20 |
| 20 | 20 | – |

**Table 22.3 Drying Shrinkage of Sand-lime Bricks**

| *Class* | *Drying Shrinkage (Percent of wet length)* |
|---|---|
| 7.5 | 0.025 |
| 10 | 0.025 |
| 15 | 0.035 |
| 20 | – |

## 21.11 SMART MATERIALS

The term smart materials, intelligent materials, active materials or adaptive materials, describe a group of material system with unique properties. Generally these materials respond with a change in shape upon application of externally applied driving forces. In addition some material system do not exhibit a shape change but rather have other significant properties. The examples are electro and magneto rheological fluids. These fluids can change viscosity over many orders of magnitude on application of an external magnetic or electrical field. Consequently, the term smart materials is not very well defined and frequently used to describe different systems and their behaviours.

To add to the confusion the term smart devises, smart systems or smart structures are often carelessly used. Here one should note that in general the system complexity increases from the unit "materials" to "device" to "system" to "structures".

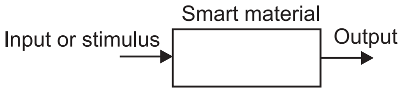

**Fig.21.8**

### Classification

The most common way of structuring is by looking at the Input and the out put of a material system as shown in Fig.21.8. The input or stimulus can be for example a change in temperature or in magnetic field. The material then intrinsically responds with an output, which in turn can be for example a change in length of the material, change in viscosity or change in electrical conductivity.

Smart materials can be divided into two groups. One group comprises the "classical" active materials as viewed by the academic community and is characterized by the type of response these materials generates. Upon application of stimulus the materials respond with a change in shape and / or in length of the material. The input is always transformed into strain, which can be used to introduce motion or dynamics into a system. These materials are the most widely used group for design of smart structures, where active materials are integrated into a mechanical host structure (for example a building or a helicopter rotor blade) with the goal to change the geometrical dimensions of the structures. The second group consists of materials that respond to stimuli with a change in a key material property, for example electrical conductivity or viscosity. While they are equally important from a scientific point of view, they are less frequently integrated into mechanical structures but rather used to design complex modules, for example clutches, fasteners, valves or various switches. Frequently these materials are used as sensors.

Although, materials in this group do not produce strain upon application of an external stimulus they are some times also referred to as actuator system. Example include the electro- and megneto reheological fluids, which respond with an increase in viscosity upon application of an external electrical or magnetic field. The property that can be altered influences what type of applications smart materials can be used for.

The applied driving forces for smart materials can be broadly classified as electrical fields-common materials include piezoelectric ceramics and piezoelectric polymers, thermal fields-materials are mainly shape memory alloys (SMAs), and magnetic fields-common materials include magnetostrictive materials and magnetic shape memory alloys.

1. **Piezoelectric materials** have two unique properties which are interrelated. When a piezoelectric material is deformed, it gives off a small but measurable electrical discharge. Alternatively, when an electrical current is passed through a piezoelectric material it experiences a significant increase in size (up to a 4% change in volume). Piezoelectric materials are most widely used as sensors in different environments. They are often used to measure fluid compositions, fluid density, fluid viscosity, or the force of an impact.
2. **Electro-rheostatic and Magneto rheostatic fluids** Electro-rheostatic (ER) and magneto-rheostatic (MR) materials are fluids, which can experience a dramatic change in their viscosity. These fluids can change from a thick fluid (similar to motor oil) to nearly a solid substance within the span or a millisecond when exposed to a magnetic or electric field; the effect can be completely reversed just as quickly when the field is removed. MR fluids experience a viscosity change when exposed to a magnetic field, while ER fluids experience similar changes in an electric field. The most common form of MR fluid consists of tiny iron particles suspended in oil, while ER fluids can be as milk chocolate or cornstarch and oil.

## Applications

The broad but strongly interdisciplinary field of materials seeks to apply multifunctional capabilities to existing and new structures. By definition, smart structures and materials are those which can sense external stimuli, via internal sensing and/or actuation, and respond with active control to that stimuli in real or near real time. Current activities in the field range from the design, fabrication, and test of fully integrated structural systems to enabling research in individual discipline areas i.e., materials, sinking and actuation techniques, control algorithms and architectures, etc.

The typical approach to achieving smart structures synthesizes composite materials and structures from known constituents. The active elements are either embedded in or attached to conventional structural materials. Typical smart structure sensors include fiber optics and piezoelectric ceramics and polymers. Embedded sensors can be used in discrete or distributed locations to provide built-in structural quality assessment capabilities, both during composite processing and system operation. In terms of system performance, it is important that the right feature be measured (*e.g.*, strain associated with curvature and deflection) and its signal interpreted with respect to the desired performance outcome (*e.g.*, a change in lift). Typical smart structure actuators are shape memory alloys (SMA's) piezoelectric and electrostrictive ceramics, magnatostrictive materials, and Electro-and megnatorhiological fluids and elastomers. When embedded with a sensor / signal processing network and an appropriate control system, actuators allow structural performance to be changed (*e.g.*, to compensate for damage) or adapted to meet various operational performance criteria (*e.g.*, to change wing lift).

A typical example of application of smart materials is of **smart concrete** developed by Dr. Deborah D.L Chung from state university of new york at Buffalo. It is a concrete reinfrorced by carbon fibres as much as 0.2% to 0.5% of volume to increase its sense ability to strain while still retaining good mechanical properties. By adding small amount of short carbon fibres into concrete, the electrical resistance of concrete increases in response to strain or stress. As the concrete is deformed or stressed, the contact between fibre and cement matrix is affected, there by affecting the volume electrical resistively of concrete. Strain is detected through measurement of the electrical resistance. So, the smart concrete has the ability to sense tiny structural flaws before they become significant, which could be used in monitoring the internal condition of structures. In addition, the presence of carbon fibres also control the cracking of concrete so that the cracks do not propagate catastrophically, as in the case of conventional concrete.

By adding carbon fibers, the extra cost of material will increase by about 30%. This expense is still significant cheaper than attaching embedding sensors into structures. Smart concrete is stronger than conventional concrete because of carbon fibers. It takes greater force for smart concrete to bend, and it absorbs more energy before fracture. Monitoring can be a real time and continuous effort.

Another possible use of Smart concrete is for the purpose of weighting vehicle on the highways. The highway made by this concrete could be able to determine where each vehicle was, and what its weight and speed were. Vehicles could be weighed while traveling normally on the highways. Smart concrete can also be used for real time vibrations sensing of bridges or other highway structures. It could also be used in buildings to dampen vibrations or reduce earthquake damage.

## 21.12 COMPOSITE MATERIALS

Composites are combination of two materials in which one of the materials called the reinforcing phase is in the form of fibers, sheets or particles and is embedded in the other material called the matrix phase. The reinforcing material and the matrix material can be metal, ceramic, or polymer. Typically, reinforcing materials are strong with low densities while the matrix is usually a ductile or tough, material. If the composite is designed and fabricated correctly, it combines the strength of the reinforcement with the toughness of the matrix to achieve a combination of desirable properties not available in any single conventional material. For example, the design situation may demand, both the strength and toughness, which have inverse relation, and are not exhibited by one material. When no single conventional material is able to satisfy the competing design specifications for a given application, the solution may be a composite material.

Because of the variety of available reinforcement and matrix materials, as well as the ability to combine them in wide range of volume fraction, composites can be produced with a broad range of elastic modulus, strength, and toughness combinations. The flexibility of tailoring to a specific need is one of the most important attributes of composites. Another advantage over conventional material is that composites can be designed to exhibit specific properties in specific directions (their anisotropy can be beneficial). The only drawback of the composites is that these are often more expensive than the conventional materials.

Application of composite material in civil infrastructure system is not only technologically sound but also economically justifiable. The economic impact to evolve from the use of composite infrastructure is:

1. Reduction in installation and construction cost
2. Reduction in maintenance cost
3. Reduction in insurance liability
4. Market expansion for the raw
5. Development and sale of the service equipment for inspection of composites structures

## Composition

Most fiber-reinforced composites consist of fibers, matrix and interfaces and are collectively responsible for the unusual characteristics of composites.

***Fiber*** The first man made polymer reinforcing fibres were nylon and polyester. The most frequently used fibres are of glass, boron, carbon, ceramic, metal etc. For any class of fibre reinforced composites the ones with highest specific strength and modulus values generally have all their fibres aligned in one direction, (unidirectional fibre reinforced composites). If the loading directions are known (and always the same) then the composites can be designed and fabricated so that the strong and stiff fiber direction coincides with the loading direction. In this case the "weakness" in the perpendicular directions is not a problem. If, however, the loading direction is not known, or varies with time, then a nearly isotropic composite is required. The fibres must be arranged so that a portion is oriented in several directions within the material. This type of fiber architecture yields properties that are between those of the "strong" and "weak" directions in *aligned fiber composites.*

In most unidirectional fiber reinforced composites the fibers do not run continuously from one end of the component to the other. If the fiber length is significantly less than the component dimensions, then the material is known as a discontinuous fiber reinforced compsite. When a discontinuous fiber with a high elastic modulus is embedded in a low modulus material, and the resulting composite is loaded in the fibers direction, the fibers carry a higher load than does the matrix. This is the principle of fiber strengthening.

*Matrix* Like fibers, matrix materials can be polymers, ceramics, or metals; often it is a resin such as polyester, or epoxy that binds the fibers together, transferring load from broken fibers to unbroken ones and between fibers that are not oriented along lines of tension. Also, unless the matrix chosen is especially flexible, it prevents the fibers from buckling in compression. In terms of stress, any fibers serve to resist tension, the matrix serves to resist shear, and all materials present serve to resist compression, including any aggregate (some composites use an aggregate instead of, or in addition to, fibers). All matrix materials tend to resist buckling too. Carbon is also used as a matrix material with carbon fibers in a class of composites known as carbon-carbon composites.

The primary purpose of the matrix materials is to provide lateral support to the fibres and transfer loads. They also are a source of toughness in the composites, since the majority of fiber materials are brittle. Cracks that have propagated through a brittle fiber are stopped when their tips encounter tough matrix materials. An exception to ductile matrix material is ceramic matrix materials, which are inherently brittle. Composites using ceramic matrices, such as reinforced concrete, are used in compressive load applications.

*Interfaces* play an important role in determining the properties of composites. An interface is a surface formed by the common boundary of the reinforced fiber when they are in contact. It constitutes the bond in between and is mainly responsible for transferring the load from matrix to the fiber. Shocks, impact, loadings or repeated cyclic stresses can cause the laminate to separate at the interface between two layers, a condition known as delamination. Individual fibers can separate from the matrix *e.g.* fiber pull-out. Consider 1 $cm^3$ of an unidirectional composite made from 25 $\mu$m diameter, continuous fibers embedded in a matrix. If the fibers are arranged in a square array and are on average 50 $\mu$m apart, the volume fraction of fibers is approximately 20%. The total fiber matrix interface area is approximately 314 $cm^2$ compared to the 6 $cm^2$ external surface area. The typical fiber volume fraction in composites is two to three times the above amount, and the interfacial area increases proportionally. The large interfacial area significantly affects the properties of composites, in particular the crucial properties of toughness and ductility.

## Examples of Composite Material

1. **Fiber reinforced plastics**
   ***Based on type of fiber***
   Wood (cellulose fibers in a lignin and hemicellulose matrix), Carbon fiber reinforced plastic or CRP, and Glass-fiber reinforced plastic or GRP (informally, "fiberglass").
   ***Based on matrix***
   *Thermoplastic Composites*
   Short fiber thermoplastics, long fiber thermoplastics or long fiber reinforced thermoplastics, glass mat thermoplastics, and continuous fiber reinforced thermoplastics.
   *Thermoset Composites*
2. **Reinforced carbon-carbon (carbon fiber in a graphite matrix)**
3. **Metal matrix composites or MMCs**
   White cast iron, Hardmetal (carbon in metal matrix), and Metal-intermetallic laminate.
4. **Ceramic matrix composites**
   Bone (hydroxyapatite reinforced with collagen fibers), Cermet (ceramic and metal), and concrete.
5. **Organic matrix/ceramic aggregate composites**
   Asphalt concrete, dental composite, syntactic foam, and mother of pearl.
6. **Engineered wood**
   Plywood, wood plastic composite (recycled wood fiber in polyethylene matrix), and Pykrete (sawdust in ice matrix).
7. **Plastic-impregnated or laminated paper or textiles**
   Arborite, and Formica (plastic).

## Uses and Applications

Many composites occur naturally for *e.g.*, wood that essentially consists of cellulose fibers in matrix of lignin, and bones, which are composites of soft protein collagen and hard minerals called apatites. However, the majority of advanced composite materials with unique properties are man-made. Straw-reinforced mud bricks for construction of huts, and laminated bows made from wood, animal, tendons and silk are examples of composites that were in use in several centuries BC. The most widely used composite material in construction industry is cement concrete and, reinforced cement concrete. Some of the special concrete such as Ferrocement and fibre concrete are also composites.

Composite materials are known to have more environmental resistance than traditional civil engineering materials such as steel, masonry, and plaster. Degradation in strength and stiffness for steel structures due to the corrosion problem requires frequent inspection, maintenance and repair. Similarly stress cracking due to warm/cold weathering limits the service life of concrete structures. Use of composites in structure minimizes property and life loss induced by earthquake.

Currently, composite materials are being used to retrofit and /or reinforce existing infrastructure. For example composite have been used to provide an external reinforcement to concrete columns to increases the earthquake resistance. Similarly, flat composite laminates may be bonded to the exterior surface of the reinforced concrete deck to increase its bending stiffness.

Based on the fiber type in the composite, the material can be selected for specific uses. Glass fibers are used to strengthen polymeric material and composites. Glass fiber reinforced plastics and glass fibre reinforced cement concrete are the excellent composite material. Alumina nickel aluminium composites. Carbon fibers are used with epoxy resins or metals such as aluminium as matrix for compressor blades in gas turbines, high strength to weight ratio is requirement. Carbon fibers in very small quantity in concrete forms smart concrete, a composite of the era. Ceramic fibres such as fibers of $Al_2O_3$ and SiC are becoming very useful. A variety of metals *e.g.*, steel can be used to draw high strength wires that may serve as metal fibers.

## EXERCISES

1. Briefly describe the properties of following building materials.
   (a) Adhesives (b) Asbestos
   (c) Thermocole
2. (a) What is thermocole?
   (b) How are adhesives classified?
   (c) Give specific uses of linoleum in buildings.
3. Write notes on:
   (a) Heat insulating materials.
   (b) Sound insulating materials.
   (c) Damp proofing materials.
4. What are geosynthetics? Briefly describe their applications in building and construction industry.
   1.Briefly describe the properties and uses of following materials
   (a) Heat insulating materials (b) Sound proofing materials
   (c) Water proofing materials (d) Sand-lime bricks
   2.Describe briefly the following materials
   (a) Thermocole (b) Linoleum
   (c) Asbestos (d) Geosynthetics

3. (a) Discuss the use of fibres in building industry
   (b) Discuss briefly the adhesives and their importance as building material.
4. Write notes on.
   (a) Smart materials (b) Composite materials
   (c) Geogrids (d) Geosynthetics

## OBJECTIVE TYPE QUESTIONS

1. The adhesive recommended for structural purposes is
   (a) silane resin (b) glues
   (c) rubber toughened epoxy (d) acrylic
2. Neoprene is a
   (a) organic solvent thinnned adhesive
   (b) latex adhesive
   (c) water-dispersed adhesive (d) two-package adhesive
3. Dextrin adhesive is
   (a) active and nonpolar (b) vinyl copolymer
   (c) made from starch (d) an epoxy adhesive
4. The material recommended for roofing is
   (a) linolium (b) asbestos
   (c) thermocole (d) geosynthetic
5. Which of the following is a cellular plastic material?
   (a) Thermocole (b) Linoleum
   (c) Neoprene (d) Asbestos
6. Which of the following is not used in the making of geosynthetics?
   (a) Nylon (b) PVC
   (c) Polypropelene (d) Ceramics

### Answer Table

1. (a) 2. (b) 3. (c) 4. (b) 5. (a) 6. (d)

# Appendix-I

## LIME-PUZZOLANA MIXTURES

1. Scope-Requirements for lime-puzzolana mixture for use in construction works.
2. Type-LP40-For masonry mortars and plasters of grade 3.0 to 5.0 N / mm$^2$ and for foundation concrete.
   LP20-For masonry mortars and plasters of grade 1.5 to 3.0 N / mm$^2$ and for foundation concrete.
   LP7-For masonry mortars and plasters of grade 0.7 to 1.5 N / mm$^2$.
3. Requirements-See Table A

**Table A Requirements of lime-Puzzonala mixtures**

| *Sl. No.* | *Characteristics* | *Requirements* | | |
|---|---|---|---|---|
| | | *Type LP40* | *Type LP20* | *Type LP7* |
| (i) | Free moisture, per cent, Max | 5 | 5 | 5 |
| (ii) | Loss on ignition, per cent, Max | 20 | 20 | 20 |
| (iii) | Fineness, per cent, retained on 150-micron sieve | 10 | 10 | – |
| (iv) | Setting time (by Vicat apparatus), hours: | | | |
| | (a) Initial Min | 2 | 2 | 2 |
| | (b) Final, Max | 24 | 36 | 48 |
| (v) | Compressive Strength:<br>Average compressive strength of not less than 3 mortar cubes of size 50 mm composed of one part of lime puzzolana mixture and 3 part of standard sand volume, N/mm$^2$: | | | |
| | (a) 7 days, Min | 2.0 | 1.0 | 0.3 |
| | (b) 28 days, Min | 4.0 | 2.0 | 0.7 |
| (vi) | Water retension-flow after suction of mortar composed of one part of lime-puzzolana mixture and 3 parts of standard sand by volume, per cent of original flow, Min | 70 | 70 | 70 |

# Appendix-II

## INDUSTRIAL BITUMEN FOR USE IN BUILDINGS

1. Scope-Physical and chemical requirements of industrial bitumen for use in buildings and for other industrial purposes.
2. Industrial bitumen either fully blown or semiblown shall be of the following ten grades:
   75/15, 65/25, 75/30, 85/25, 85/40, 90/15, 105/20, 115/15, 135/10, 155/6
   The two figures given in the grade denote approximate values of softening point and perntration in that order; for example, 85/25 means that industrial bitumen corresponding to this grade has approximately a softening point of 85°C and a penetration of 25.
3. Requirements-See Table B

**Table B Requirements of industrial bitumen**

| *Sl.No.* | *Characteristic* | *Limit for grade* | | | | | | | | | |
|---|---|---|---|---|---|---|---|---|---|---|---|
| | | 75/15 | 65/25 | 75/30 | 85/25 | 85/40 | 90/15 | 105/20 | 115/15 | 135/10 | 155/6 |
| (i) | Specific gravity at 27°C | 1.00 to 1.05 | 1.00 to 1.05 | 1.00 to 1.05 | 1.00 to 1.05 | 1.00 to 1.05 | 1.01 to 10.6 | 1.01 to 1.06 | 1.01 to 1.06 | 1.01 to 1.06 | 1.01 to 1.06 |
| (ii) | Flash point, Pensky-Martens Closed Type°C, Min | 200 | 200 | 200 | 200 | 200 | 200 | 200 | 200 | 200 | 200 |
| (iii) | Softening point, °C | 65 to 80 | 55 to 70 | 70 to 80 | 80 to 90 | 80 to 90 | 85 to 100 | 95 to 115 | 110 to 120 | 110 to 140 | 110 to 160 |
| (vi) | Penetration, at 25°C, 100g 5 seconds in 1/100 cm | 10 to 20 | 20 to 30 | 25 to 35 | 20 to 45 | 35 to 20 | 10 to 25 | 15 to 20 | 8 to 20 | 7 to 12 | 2 to 10 |
| (v) | Ductility, at 27°C, in cm, Min | 2.5 | 10 | 3 | 3 | 3 | 2 | 2 | 2 | 1 | 0 |
| (vi) | Loss on heating, per cent by weight, Max | 0.30 | 0.30 | 0.30 | 0.30 | 0.30 | 0.30 | 0.30 | 0.30 | 0.30 | 0.30 |
| (vii) | Matter soluble in carbon disulphide, per cent by weigth, Min | 99 | 99 | 99 | 99 | 99 | 99 | 99 | 99 | 99 | 99 |

# INDEX